MITSUBISHI ELECTRIC

Changes for the Better

for a greener tomorrow

HOT WATER HEAT PUMP

DATA BOOK

MODEL

CAHV-P500YB-HPB(-BS)

HOT WATER HEAT PUMP

1. Product Specifications 2
   1-1.Specifications 2
   1-2.External Dimensions 3
   1-3.Center of Gravity 4
   1-4.Electrical Wiring Diagrams 5
   1-5.Accessories 8
   1-6.Optional parts 8
2. Product Data 10
   2-1.Capacity tables 10
   2-2.Sound pressure levels 14
   2-3.Vibration levels 15
3. Installation 16
   3-1.Selecting the Installation Site 16
   3-2.Unit Installation 20
   3-3.Removing the metal plates and saddles around the compressor 21
   3-4.Installing the unit in a snow area 22
4. System Design 23
   4-1.Water Pipe Installation 23
   4-2.Ensuring enough water in the water circuit 27
   4-3.Inlet/Outlet pipe connection size and material 27
5. Wiring Design 28
   5-1.System Configurations 28
   5-2.Electrical Wiring Installation 29
6. Controller 31
   6-1.PAR-W21MAA specifications 31

1. Product Specifications

1-1. Specifications

Model			CAHV-P500YB-HPB
Power Source			3-phase 4-wire 380-400-415V 50/60Hz
Capacity *1		kW	45.0
		kcal/h	38700
		BTU/h	153540
	Power input	kW	12.9
	Current input	A	21.8-20.7-19.9
	COP (kW/kW)		3.49
Capacity *2		kW	45.0
		kcal/h	38700
		BTU/h	153540
	Power input	kW	25.6
	Current input	A	43.2-41.0-39.5
	COP (kW/kW)		1.76
Maximum current input *3		A	57.8-54.9-52.9
Water pressure drop *1			12.9kPa (1.87psi)
Temp range	Outlet water temp *4		25~70°C 77~158°F
	Outdoor temp *4	D.B	-20~40°C -4~104°F
Circulating water volume range			7.5 m³/h-15.0m³/h
Sound pressure level (measured in anechoic room) *1		dB (A)	59
Sound pressure level (measured in anechoic room) *3		dB (A)	63
Diameter of water pipe	Inlet	mm (in.)	38.1 (Rc 1 1/2") screw
	Outlet	mm (in.)	38.1 (Rc 1 1/2") screw
External finish			Acrylic painted steel plate <MUNSELL 5Y 8/1 or similar>
External dimension H × W × D		mm in.	1710 (without legs 1650) × 1978 × 759 67.3 (without legs 65.0) × 77.9 × 29.9
Net weight		kg (lbs)	511 (1127)
Accessories			Y strainer Rc 1 1/2
Design Pressure	R407C	MPa	3.85
	Water	MPa	1.0
Drawing	Wiring		KC94R746
	External		KC94R745
Heat exchanger	Water side		stainless steal plate and copper brazing
	Air side		Plate fin and copper tube
Compressor	Type		Inverter scroll hermetic compressor
	Maker		MITSUBISHI ELECTRIC CORPORATION
	Starting method		Inverter
	Motor output	kW	7.5 × 2
	Case heater	kW	0.045 × 2
	Lubricant		MEL32
FAN	Air flow rate	m³/min	185 × 2
		L/s	3083 × 2
		cfm	6532 × 2
	External static press *5		0Pa, 60Pa (0mmH_2O/6.1mmH_2O)
	Type × Quantity		Propeller fan × 2
	Control, Driving mechanism		Inverter-control, Direct-driven by motor
	Motor output	kW	0.92 × 2
HIC circuit (HIC:Heat inter-Changer)			Copper pipe
Protection	High pressure protection		High pres.Sensor & High pres.Switch at 3.85MPa (643psi)
	Inverter circuit		Over-heat protection, Over current protection
	Compressor		Over-heat protection
	Fan motor		Thermal switch
Defrosting method			Auto-defrost mode (Reversed refrigerant circle)
Refrigerant	Type × original charge		R407C × 5.5(kg) × 2
	Control		LEV and HIC circuit

*1 Under Nominal heating conditions at outdoor temp, 7ºC DB/6ºC WB(44.6°F DB/42.8°F WB) outlet water temp 45ºC(113°F), inlet water temp 40ºC(104°F)
*2 Under Heating conditions at outdoor temp, 7ºC DB/6ºC WB(44.6°F DB/42.8°F WB), outlet water temp 70ºC (158°F)
*3 Under Heating conditions at outdoor temp, 7ºC DB/6ºC WB(44.6°F DB/42.8°F WB) when this unit is set to capacity priority mode by non-voltage B contact
*5 Dip SW on the unit control board need to be changed.
* Due to continuing improvement, the above specifications may be subject to change without notice.
* Please don't use the steel material for the water piping material.
* Please always make water circulate or pull out the circulation water completely when not using it.
* Please do not use groundwater and well water.
* Install the unit in an environment where the wet bulb temp will not exceed 32ºC (89.6°F).
* The water circuit must use the closed circuit.
* There is possibility that the unit may abnormally stop when it operates outside its operating range. Provide backup (ex. boiler start with Error display output signal (blue CN511 1-3)) for abnormal stop.
* The capacity is tested based on EN14511-3.

*4

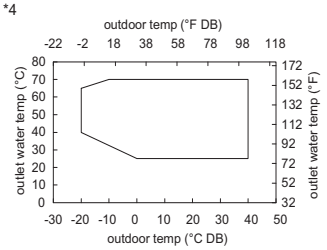

Outdoor temp -20°C DB/ Outlet water temp 40~65°C
(Outdoor temp -4°F DB/ Outlet water temp 104°F~149°F)
Outdoor temp -10°C DB/ Outlet water temp 33°C~70°C
(Outdoor temp 14°F DB/ Outlet water temp 91°F~158°F)
Outdoor temp 0°C DB/ Outlet water temp 25°C~70°C
(Outdoor temp 32°F DB/ Outlet water temp 77°F~158°F)

Unit converter

kcal/h =kW × 860
BTU/h =kW × 3,412
cfm = m³/min x 35.31
lbs =kg/0.4536

1-2. External Dimensions

CAHV-P500YB-HPB(-BS)

Unit: mm

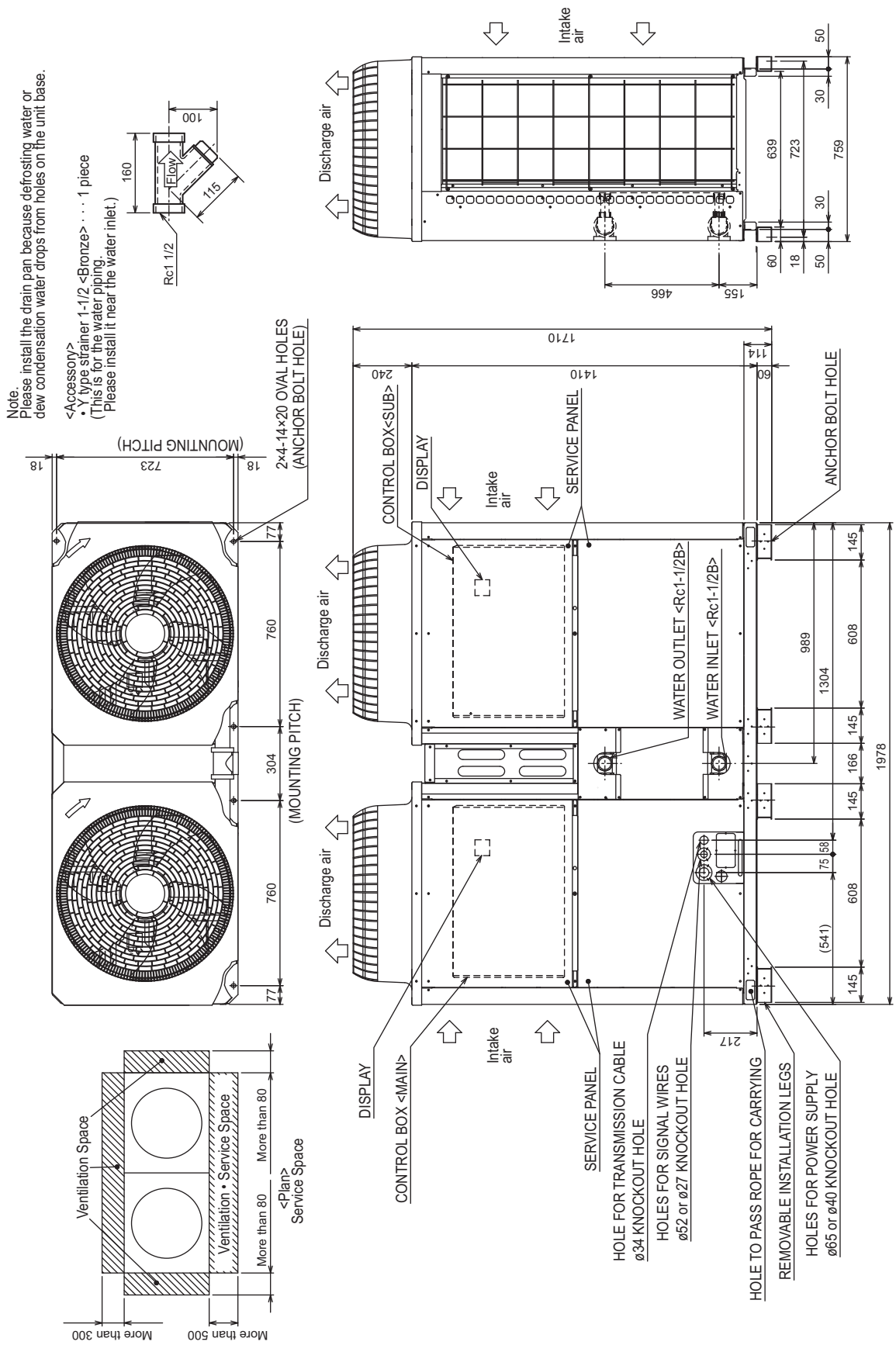

1-3. Center of Gravity

Unit: mm

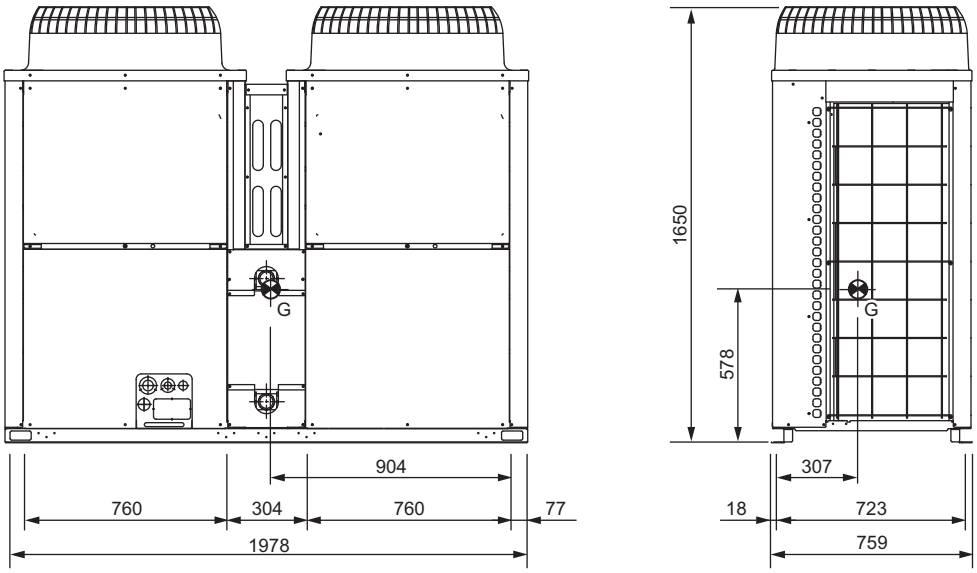

1-4. Electrical Wiring Diagrams

CAHV-P500YB-HPB(-BS)

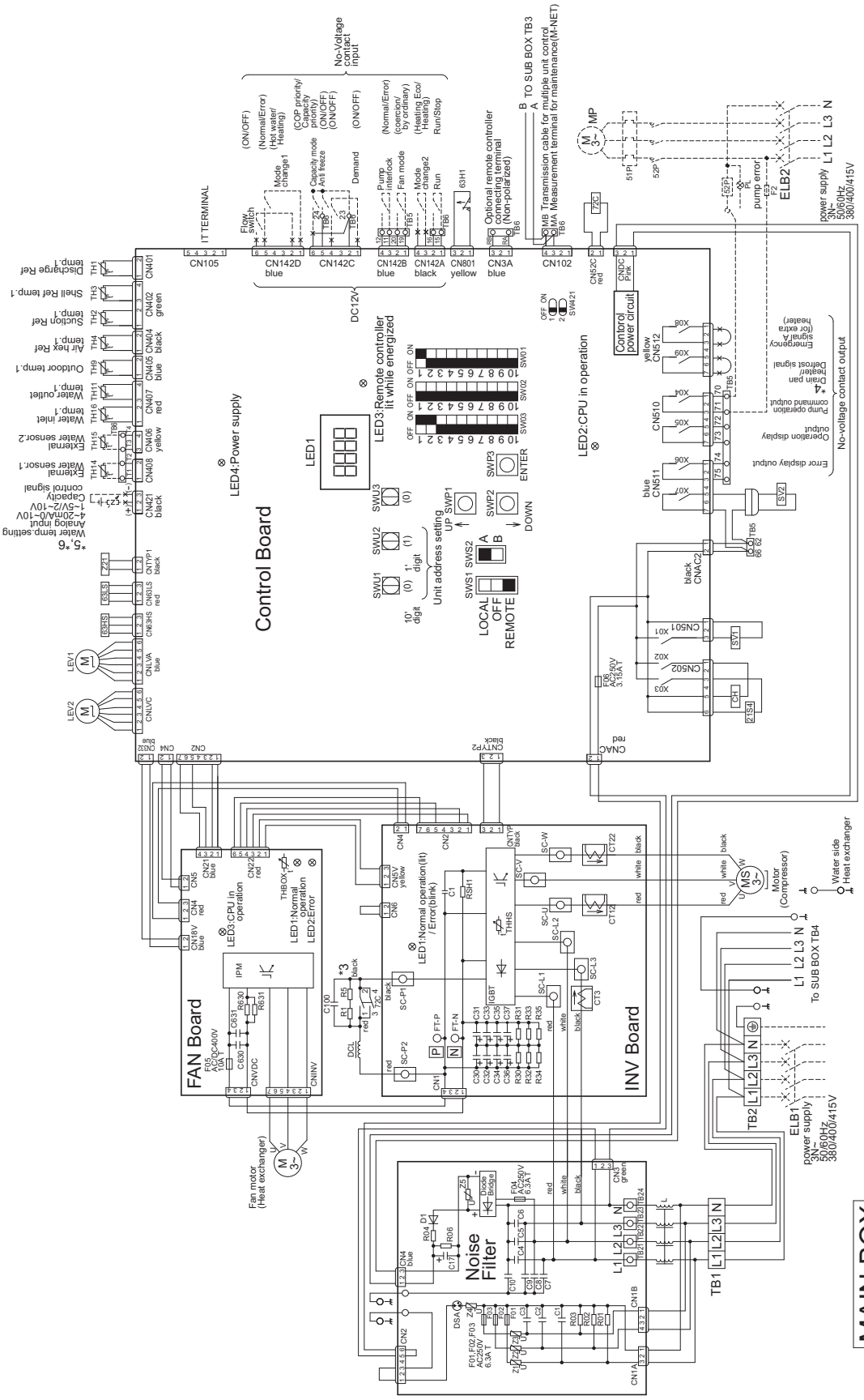

CAHV-P500YB-HPB(-BS)

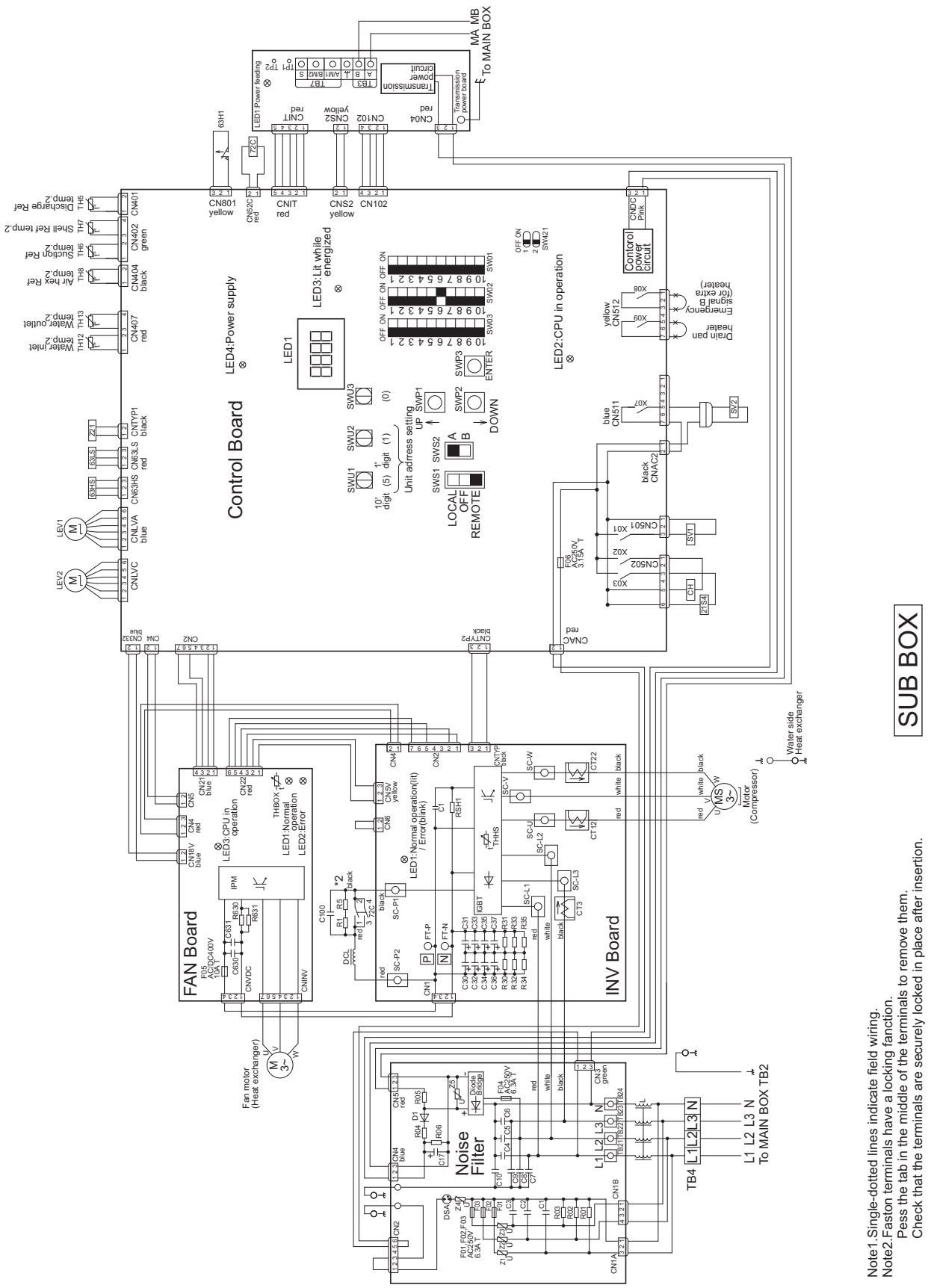

Note1.Single-dotted lines indicate field wiring.
Note2.Faston terminals have a locking fanction.
Pess the tab in the middle of the terminals to remove them.
Check that the terminals are securely locked in place after insertion.

CAHV-P500YB-HPB(-BS)

Note

1. The broken lines indicate the optional parts,field-supplied parts, and field work.
2. Make sure to connect a pump interlock contact. A short-circuit may cause abnormal stop or malfunctions.
3. The preset temperature setting can be switched from the no-voltage contact or by setting time ranges.
4. Leave a space of at least 5 cm between the low voltage external wiring (no-voltage contact input and remote controller wiring) and wiring of 100V or greater.Do not place them in the same conduit tube or cabtyre cable as this will damage the circuit board.
5. When cabtyre cable is used for the control cable wiring, use a separate cabtyre cable for the following wiring. Using the same cabtyre cable may cause malfunctions and damage to the unit.
   (a) Optional remote controller wiring
   (b) No-voltage contact input wiring
   (c) No-voltage contact output wiring
   (d) Remote water temperature setting
6. Use a contact that takes 12VDC 5mA for no-voltage contact input.

Symbol explanation

	Symbol	explanation
MAIN BOX and SUB BOX	CH	Crankcase heater (for heating the compressor)
	CT12	Ac current sensor
	CT22	
	CT3	
	C100	Capacitor (Electrolysis)
	DCL	DC reactor
	F01	Fuse
	F02	
	F03	
	F04	
	F05	
	F06	
	LEV1	Electronic expansion valve (Main circuit)
	LEV2	Electronic expansion valve (Injection)
	M	Fan motor
	MS	Compressor motor
	R1	Electrical resistance
	R5	
	SV1	Solenoid valve (Injection circuit)
	SV2	Solenoid valve (Hot gas circuit)
	THHS	IGBT temperature
	Z21	Function setting connector
	21S4	4-way valve
	63HS	High pressure sensor
	63H1	High pressure switch
	63LS	Low pressure sensor
	72C	Electromagnetic relay (Inverter main circuit)
MAIN BOX	TH1~4	Thermistor
	TH9,11	
	TH14~16	
SUB BOX	TH5~8	Thermistor
	TH12,13	
Field-supplied	<ELB1,2,3>	Earth leakage breaker
	<F2,3>	Fuse
	<MP>	Pump motor
	<51P>	Overcurrent relay (Pump)
	<52P>	Electromagnetic contactor (Pump)

1-5. Accessories

CAHV-P500YB-HPB(-BS)

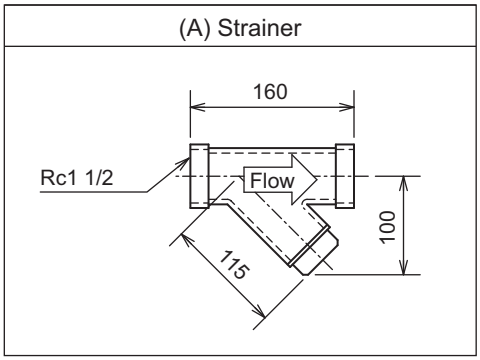

(A) Install the strainer at the water pipe inlet.

1-6. Optional parts

1-6-1. IT TERMINAL BOX

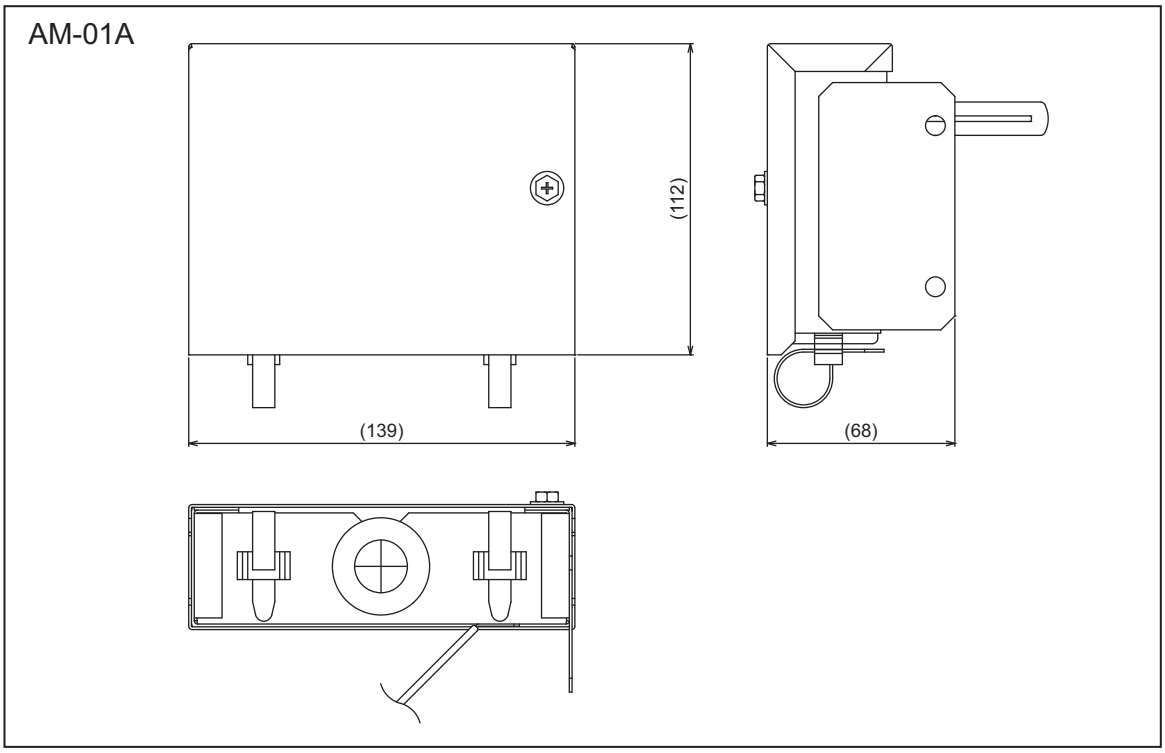

*For the installation, refer to the Installation Manual that comes with the IT TERMINAL BOX.

1-6-2. Representative-water temperature sensor TW-TH16

1. Required parts for installing a representative-water temperature sensor
   A) Representative-water temperature sensor
   B) Cable for connecting between the sensor and the unit*
   C) Cable terminal for connecting to the sensor and the unit terminal block*
   (Terminals for M4 screws × 4)*
   * A) and B) are field-supplied.

Cable specifications

Size	2-core, 1.25 mm^2 or larger
Type	CVVS or CPEVS
Length	20 m

2. Installing a representative-water temperature sensor
   As shown in the figures below, install the sensor at the merged part of water pipes or the load-side tank.
   The sensor can be installed in either the vertical or the horizontal position. When installing the sensor in the horizontal position, make sure to place the cable-access-hole side down.

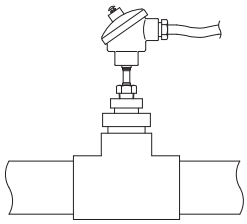

Vertical installation

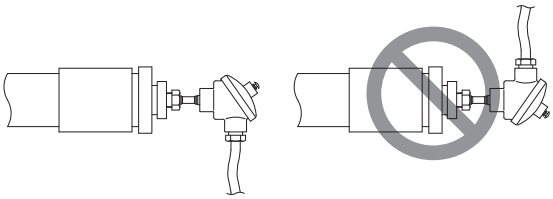

Horizontal installation

3. Wiring for a representative-water temperature sensor
   As shown in the figures below, connect the cable to the representative-water temperature sensor and the terminal block in the unit control box.

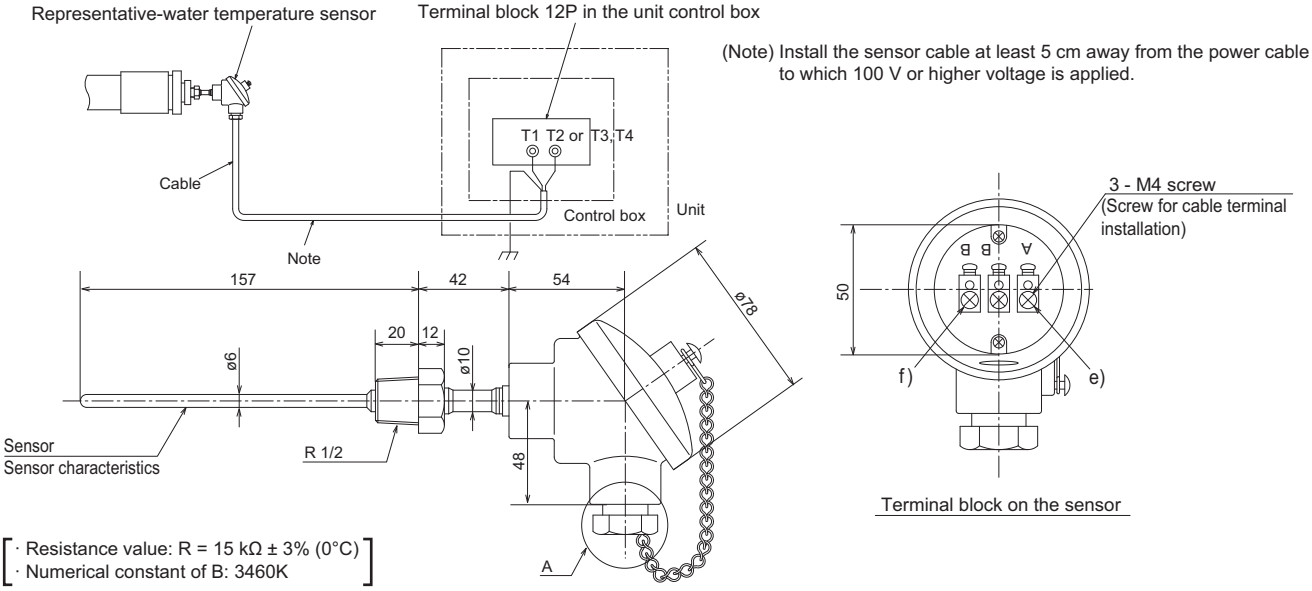

On the unit side, connect the sensor cable to the terminals T1 and T2 in the terminal block 12P in the unit control box.
Connect the shielded cable to the ground terminal.
On the sensor side, as shown in the figure at right, run the cable through d), c), and b), attach the field-supplied terminals for M4 screws to the cable, and then connect the terminals to the screws e) and f) (terminal A and B).
Cut the shielded cable and leave it unconnected.
(On the unit side, the shielded cable should be connected to the ground terminal already.)

Tighten the tightening screw d), and caulk the gap between the tightening screw d) and cable a) to prevent water leakage.

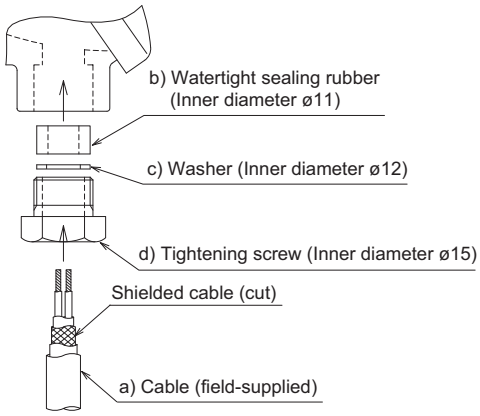

Enlarged view of area A: Cable installation

2. Product Data

2-1. Capacity tables

2-1-1. Correction by temperature

CAHV-P500YB-HPB(-BS)

(1) Efficiency Priority Mode

Capacity		Intake air temperature °C															
		-20	-15	-10	-7	-5	0	2	5	7	10	16	20	25	30	35	40
Outlet water temperature °C	35	-	-	40.3	42.2	42.4	42.7	42.8	43.5	45.0	45.0	45.0	45.0	45.0	45.0	45.0	45.0
	45	32.0	37.4	40.6	42.4	42.6	42.9	43.0	43.5	45.0	45.0	45.0	45.0	45.0	45.0	45.0	45.0
	55	32.2	37.7	40.8	42.7	42.8	43.1	43.2	43.6	45.0	45.0	45.0	45.0	45.0	45.0	45.0	45.0
	60	32.2	37.8	40.9	42.8	42.9	43.2	43.3	43.7	45.0	45.0	45.0	45.0	45.0	45.0	45.0	45.0
	65	32.2	37.9	41.0	42.9	43.0	43.3	43.4	43.7	45.0	45.0	45.0	45.0	45.0	45.0	45.0	45.0
	70	-	-	41.1	43.0	43.1	43.4	43.5	43.7	45.0	45.0	45.0	45.0	45.0	45.0	45.0	45.0

This table shows the capacity when the relative humidity is 85%.
The intake wet-bulb temperature is fixed to 32°C when the intake dry-bulb temperature is 35°C or higher.

Power input		Intake air temperature °C															
		-20	-15	-10	-7	-5	0	2	5	7	10	16	20	25	30	35	40
Outlet water temperature °C	35	-	-	17.0	16.9	16.2	14.7	14.2	12.0	10.9	9.82	8.20	7.40	6.60	6.30	6.02	5.77
	45	18.4	19.4	19.4	19.5	18.7	17.0	16.4	14.2	12.9	11.9	10.1	9.08	8.05	7.73	7.44	7.17
	55	21.2	22.5	22.7	22.8	22.0	20.1	19.5	17.5	16.5	15.2	13.2	12.1	11.0	10.3	9.75	9.24
	60	22.9	24.5	24.8	25.0	24.1	22.1	21.4	19.1	17.8	16.6	14.7	13.6	12.4	11.6	10.8	10.2
	65	24.9	26.8	27.3	27.6	26.7	24.6	23.9	22.2	21.3	19.6	16.9	15.4	14.0	13.0	12.1	11.4
	70	-	-	30.2	30.8	29.8	27.6	26.9	25.7	25.6	23.9	19.9	18.0	16.0	14.8	13.8	12.9

This table shows the power input when the relative humidity is 85%.
The intake wet-bulb temperature is fixed to 32°C when the intake dry-bulb temperature is 35°C or higher.

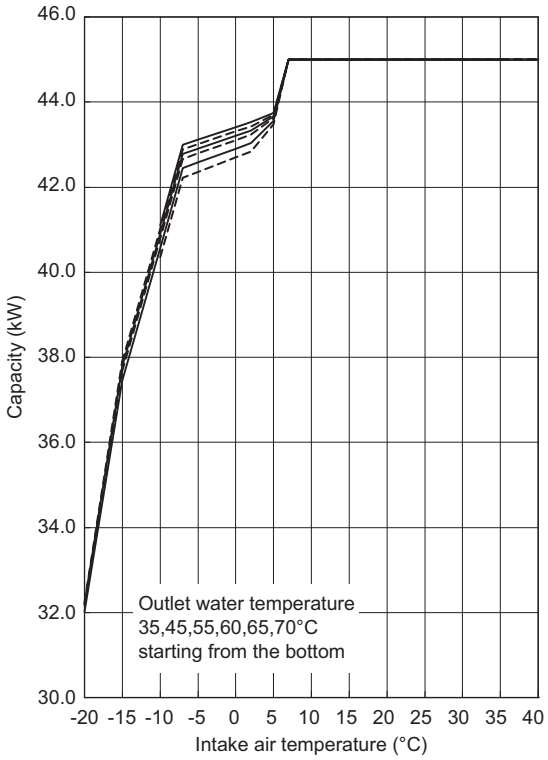

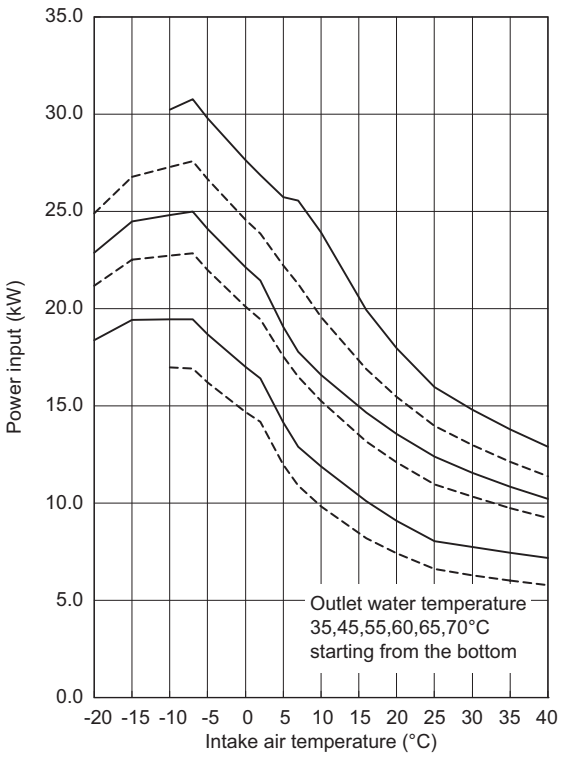

(2) Capacity Priority Mode

Capacity		Intake air temperature °C															
		-20	-15	-10	-7	-5	0	2	5	7	10	16	20	25	30	35	40
Outlet water temperature °C	35	-	-	40.3	42.2	42.4	42.7	45.4	49.6	63.4	65.9	71.3	73.9	75.4	73.0	70.5	68.0
	45	32.0	37.4	40.6	42.4	42.6	42.9	45.0	49.1	63.2	65.6	70.4	73.0	74.8	72.2	69.6	67.0
	55	32.2	37.7	40.8	42.7	42.8	43.1	44.5	48.8	62.8	65.9	69.6	71.3	71.0.	69.2	67.5	65.7
	60	32.2	37.8	40.9	42.8	42.9	43.2	44.1	48.6	61.5	64.8	68.6	69.7	69.4	68.1	66.8	65.5
	65	32.2	37.9	41.0	42.9	43.0	43.3	43.7	48.5	60.1	63.1	67.6	68.7	67.8	66.9	66.1	65.2
	70	-	-	41.1	43.0	43.1	43.4	43.5	48.3	58.7	61.3	65.8	66.7	66.1	65.7	65.4	65.0

This table shows the capacity when the relative humidity is 85%.
The intake wet-bulb temperature is fixed to 32°C when the intake dry-bulb temperature is 35°C or higher.

Power input		Intake air temperature °C															
		-20	-15	-10	-7	-5	0	2	5	7	10	16	20	25	30	35	40
Outlet water temperature °C	35	-	-	17.0	16.9	16.2	14.7	15.6	15.2	17.7	17.0	16.2	15.3	13.9	12.7	11.6	10.8
	45	18.4	19.4	19.4	19.5	18.7	17.0	17.8	17.6	20.9	20.2	19.2	18.1	16.6	14.6	12.9	11.8
	55	21.2	22.5	22.7	22.8	22.0	20.1	20.8	21.2	25.6	25.3	23.9	22.2	19.5	17.4	15.6	14.1
	60	22.9	24.5	24.8	25.0	24.1	22.1	22.6	23.4	27.9	27.9	26.6	24.3	21.3	19.0	17.2	15.6
	65	24.9	26.8	27.3	27.6	26.7	24.6	24.8	25.8	30.1	30.2	29.6	27.0	23.2	20.9	19.0	17.4
	70	-	-	30.2	30.8	29.8	27.6	27.5	28.6	32.6	32.7	32.5	29.5	25.2	23.1	21.3	19.7

This table shows the power input when the relative humidity is 85%.
The intake wet-bulb temperature is fixed to 32°C when the intake dry-bulb temperature is 35°C or higher.

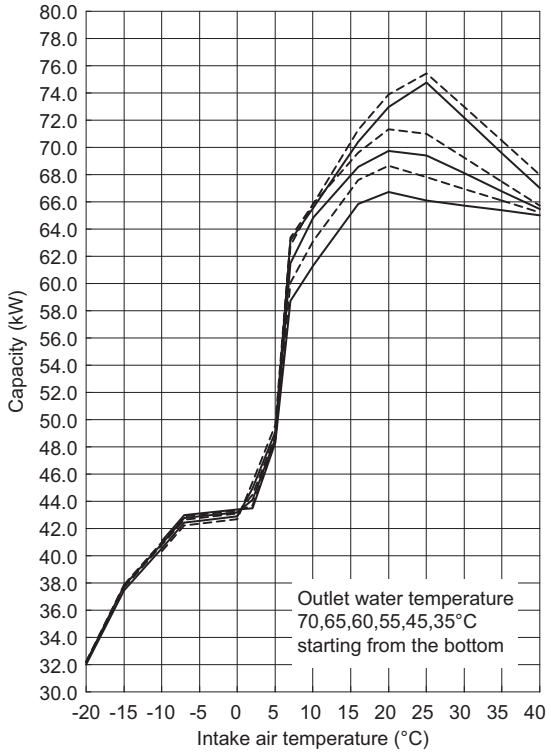

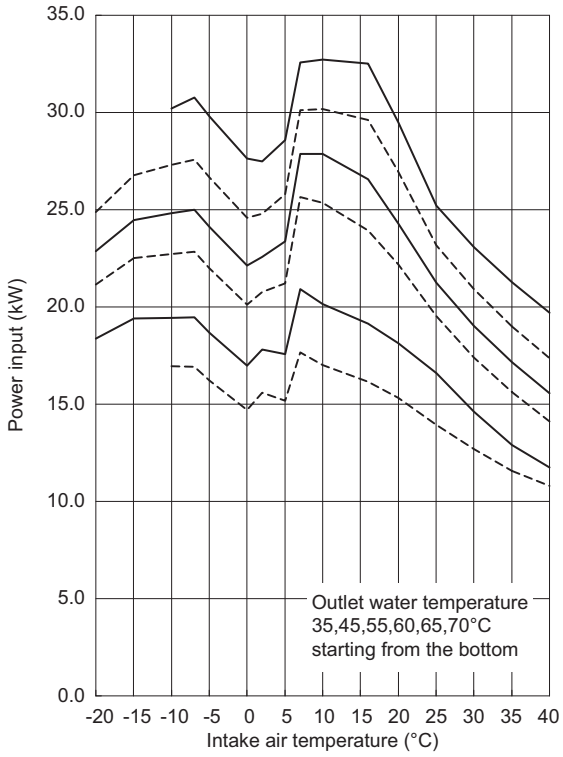

2-1-2. Correction by relative humidity

CAHV-P500YB-HPB(-BS)

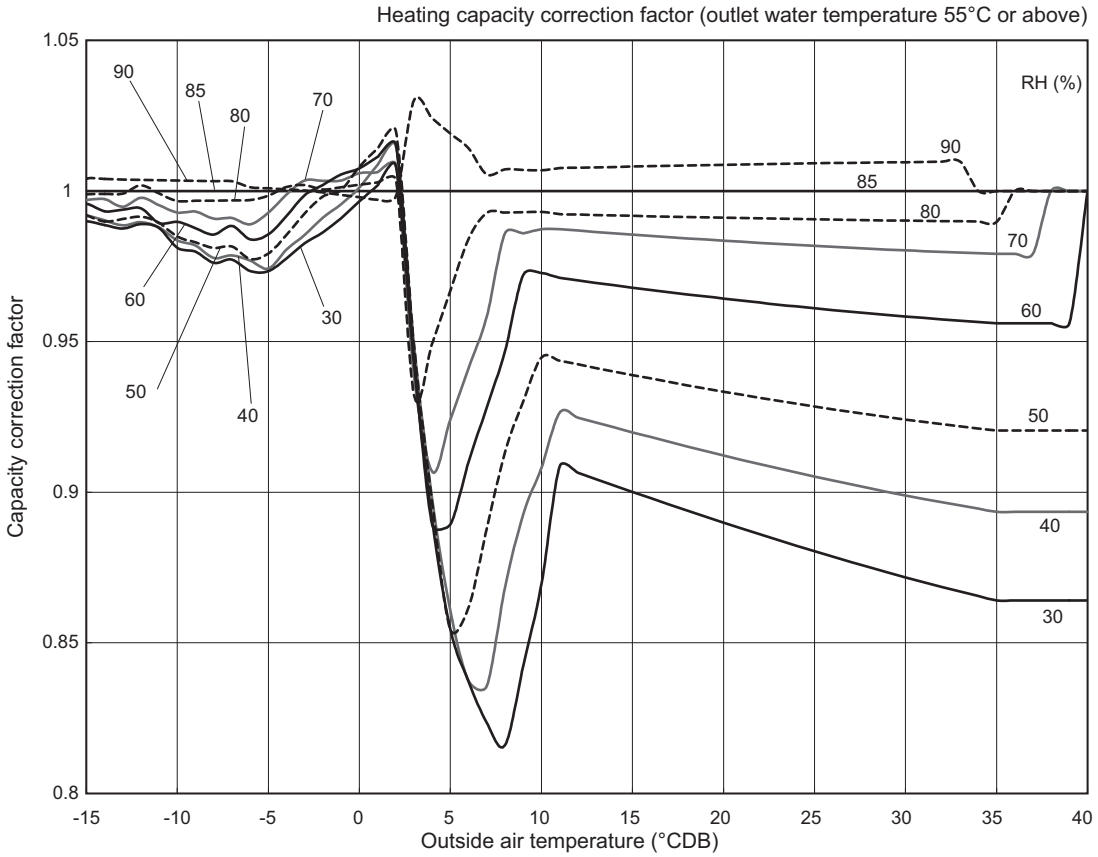

2-1-3. Correction by water flow rate

CAHV-P500YB-HPB(-BS)

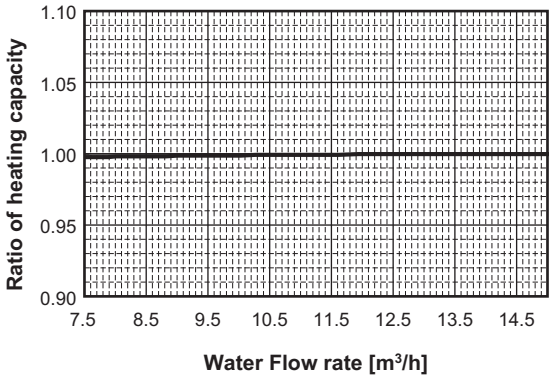

*Conditions Outdoor temperature 0°C
Intake water temperature 65°C
Frequency of compressor 100Hz

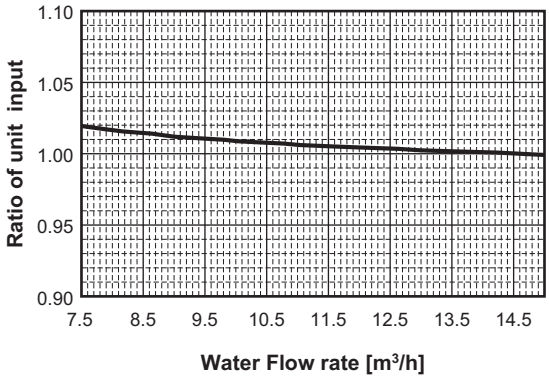

*Conditions Outdoor temperature 0°C
Intake water temperature 50°C
Frequency of compressor 100Hz

2-1-4. Water pressure drop

CAHV-P500YB-HPB(-BS)

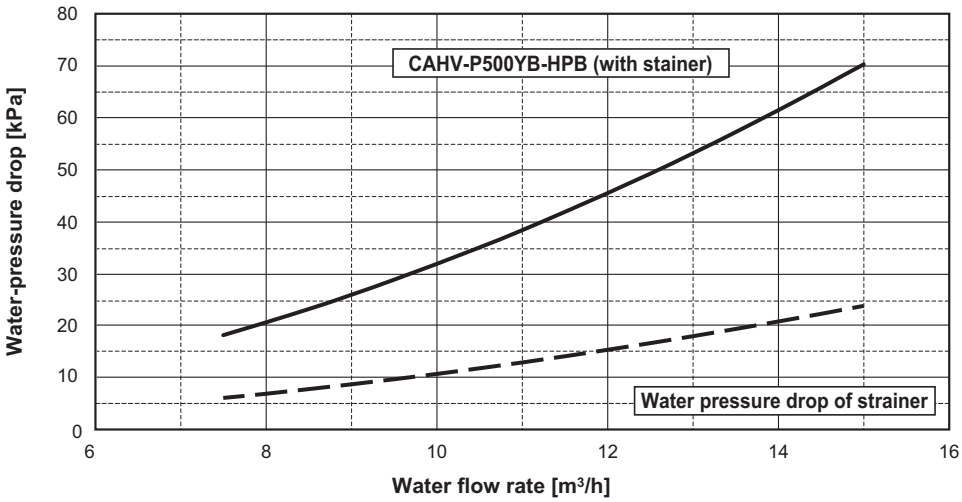

2-1-5. Operation temperature range

CAHV-P500YB-HPB(-BS)

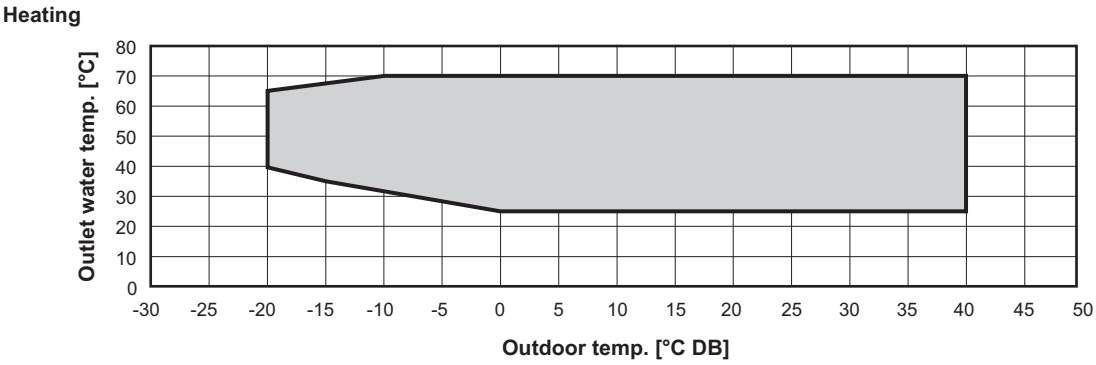

2-2. Sound pressure levels

Measurement condition
CAHV-P500YB-HPB(-BS)

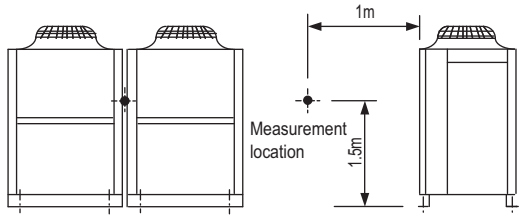

Sound Pressure Level: 59.0 / 63.0 dB (COP Priority Mode / Capacity Priority Mode)

Opetation condition… Spring, Autumn: Outdoor temp.: 16°CDB/12°CWB, Inlet water temp.: 40°C, Outlet water temp.: 45°C
Winter: Outdoor temp.: 7°CDB/ 6 °CWB, Inlet water temp.: 65°C, Outlet water temp.: 70°C

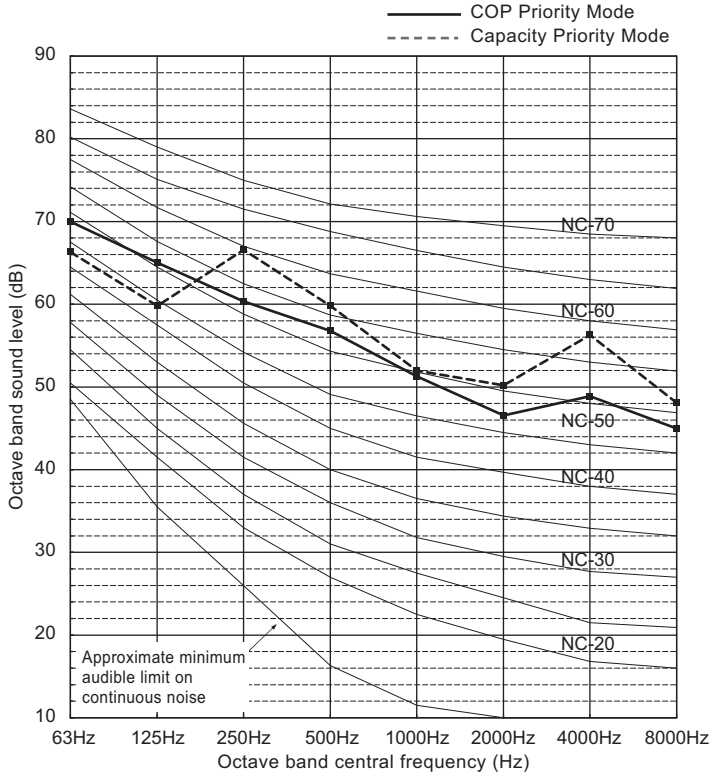

2-3. Vibration levels

CAHV-P500YB-HPB(-BS)

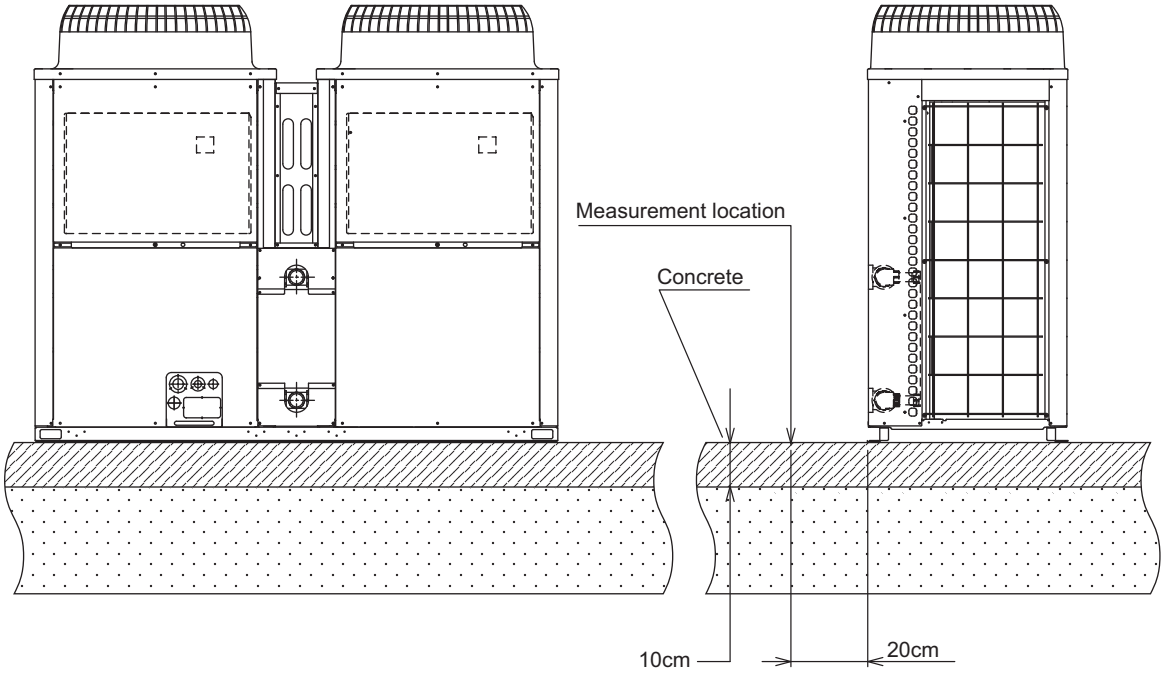

Model	Vibration Levels [dB]
CAHV-P500YB-HPB(-BS)	47 or less

3. Installation

3-1. Selecting the Installation Site

3-1-1. Installation Conditions

Select the installation site in consultation with the client.
Select a site to install the outdoor unit that meets the following conditions:

- The unit will not be subject to heat from other heat sources.
- The noise from the unit will not be a problem.
- The unit will not be exposed to strong winds.
- Water from the unit can be drained properly.
- The space requirements as shown in 3-1-2. Installation space requirements.

1. Providing protection against winds

Using the figures at right as a reference, provide adequate protection against winds.
A unit installed alone is vulnerable to strong winds. Select the installation site carefully to minimize the effect of winds. When installing a unit in a place where the wind always blows from the same direction, install the unit so that the outlet faces away from the direction of the wind.

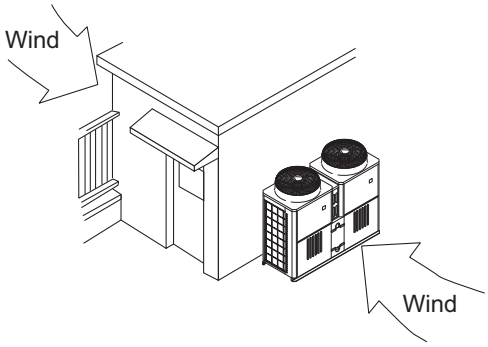

• Install the outdoor unit in a place where it is not exposed to direct wind, such as behind a building.

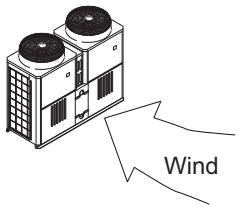

• Install the outdoor unit so that the outlet/inlet faces away from the wind.

2. Cold Climate Installation

Observe the following when installing the units in areas where snow or strong winds prevail.

- Avoid direct exposure to rain, winds, and snow.
- When deciding the high of the unit stand for snow damage prevention, consider the snow accumulation.
- There is a possibility that an icicle may form under the unit stand. Consider this when installing the unit on the roof for this may injure person or the property.
- If the units are installed in the direct line of rain, winds, or snow, install the optional snow hood (on both the discharge and suction ducts). Use a snow net or snow fence as necessary to protect the unit.
- Install the unit on a base approximately twice as high as the expected snowfall.
- If the unit is continuously operated for a long time with the outside air temperature below the freezing point, install a heater at the base of the unit to prevent the water from freezing at the unit bottom.

3-1-2. Installation space requirements

1. Single unit installation

Secure enough space around the unit as shown in the figures below.

(1) Walls around the unit do not exceed the height limit.

<Unit: mm>

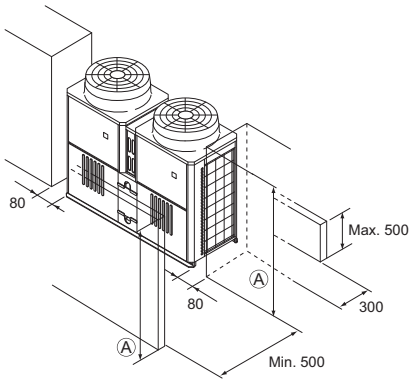

Ⓐ Walls are lower than the unit's height.

(2) There is a wall above the unit.

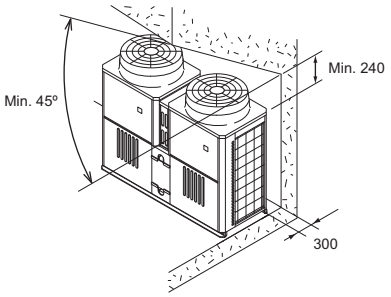

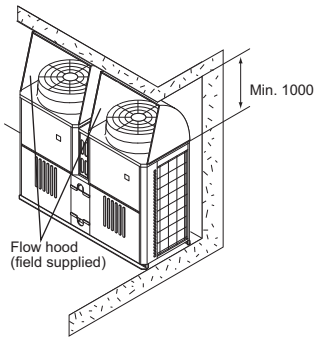

(3) One or more of the walls around the unit are taller than the maximum allowable height <h>.

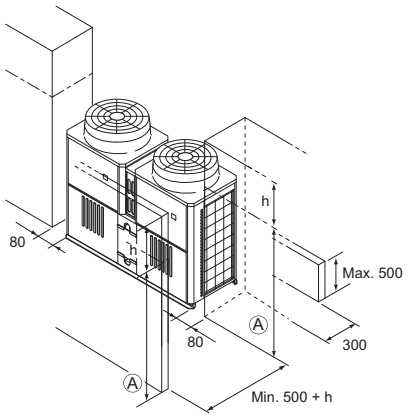

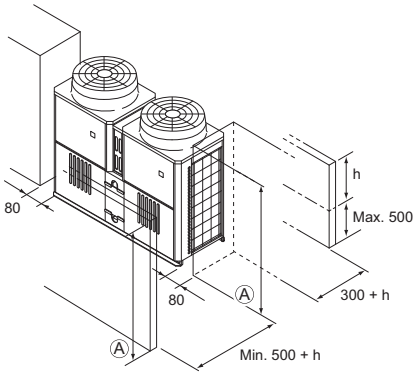

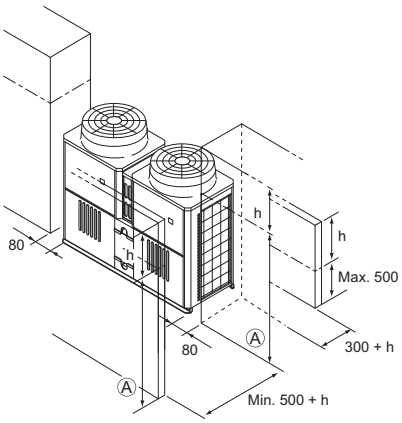

Ⓐ Walls are lower than the unit's height.

(4) Water pipe installation

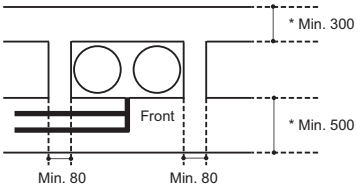

<Top view>

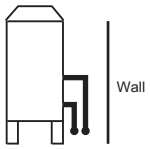

<Side view>

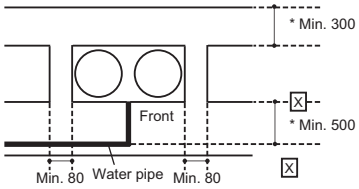

<Top view>

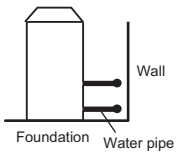

<Side view>

Leave a space of at least 500 between the unit and the water pipe if it is not possible to install the unit on a raised foundation. (SEE X in the figure.)

2. Grouped and side-by-side installation

When multiple units are installed adjacent to each other, allow enough space for air circulation and a walk way between groups of units as shown in the figures below.

* Leave both sides of each group of units open.

As with individual installation, if the wall height exceeds the height limit, widen the space in the front and the back of a given group of units by the amount that exceeds the limit (labeled <h> in the figure).

(1) Side-by-side installation

<Unit: mm>

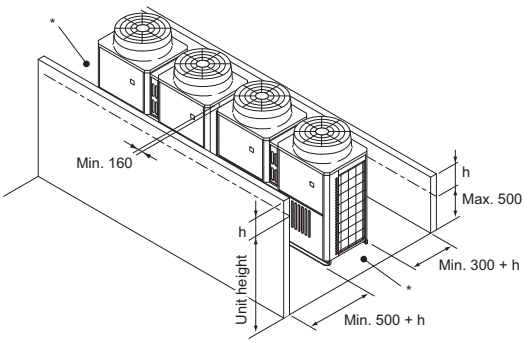

(2) Face-to-face installation

• There are walls in the back and the front of a given group of units.

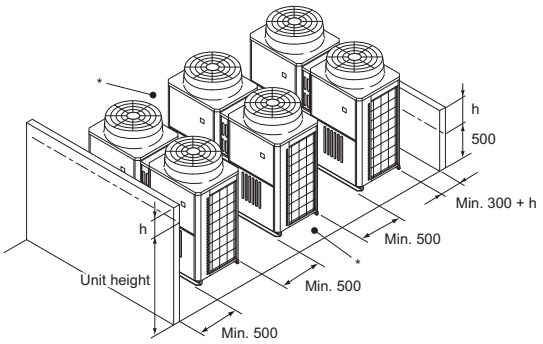

• There is a wall on one side.

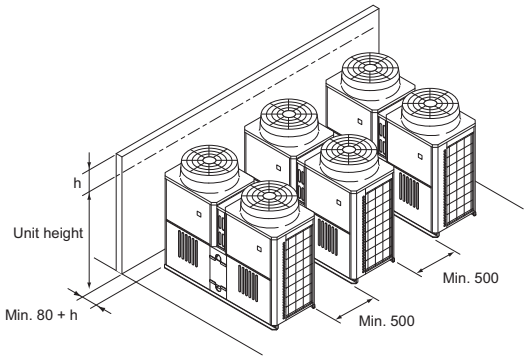

(3) Combination of face-to-face and side-by-side installations

• There are walls in the back and the front of a given group of units.

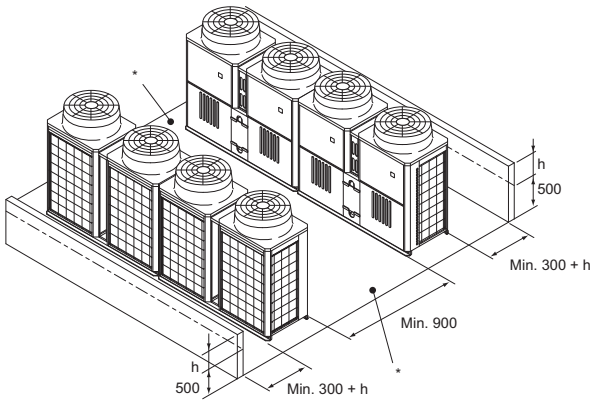

• There is a wall on one side and either the front or the back of a given group of unit.

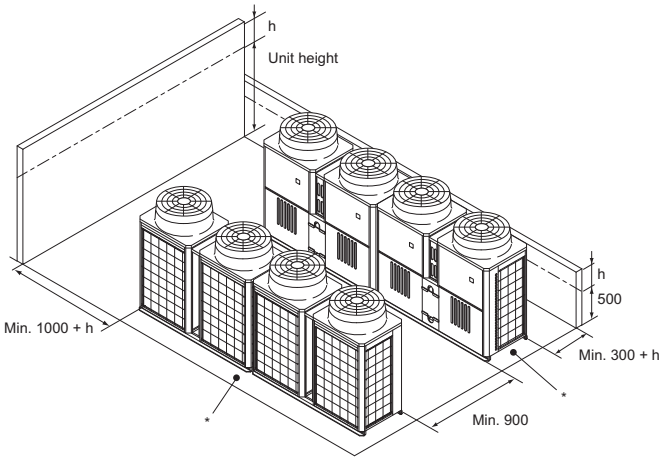

(4) Water pipe installation

Pattern A

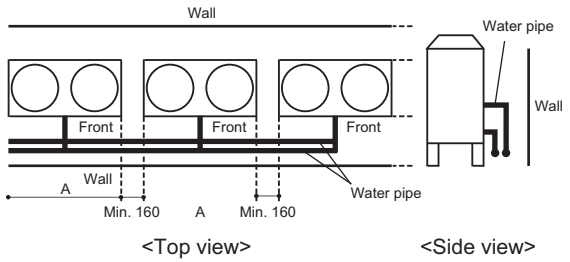

If the product width (labeled A in the figure) times the number of units that are installed side by side exceeds 6 m, leave a space of 1000 mm between each block. Each block is defined as a group of units that fit within 6 m.

Pattern B

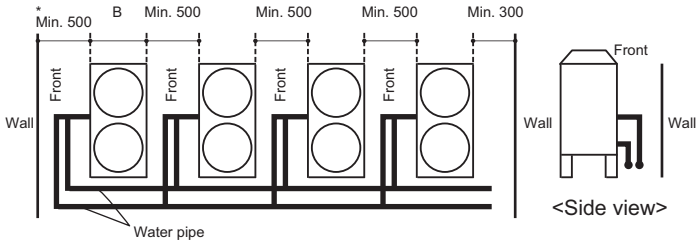

If the product depth (labeled B in the figure) times the number of units that are installed in rows exceeds 6 m, leave a space of 1000 mm between each block. Each block is defined as a group of units that fit within 6 m.

3. Required airflow rate for the unit

Unit: m^3/min

Model	Standard airflow rate	Minimum airflow rate	Allowable external static pressure (Unit: Pa)
CAHV-P500YB-HPB(-BS)	370	333	10

3-2. Unit Installation

Units should be installed only by personnel certified by Mitsubishi Electric.

- Fix unit tightly with bolts so that unit will not fall down due to earthquakes or strong winds.
- Use concrete or an angle bracket as the foundation of unit.
- Vibration may be transmitted to the installation section and noise and vibration may be generated from the floor and walls, depending on the installation conditions. Therefore, provide ample vibrationproofing (cushion pads, cushion frame, etc.).
- Build the foundation in such way that the corner of the installation leg is securely supported as shown in the figure. When using a rubber isolating cushion, please ensure it is large enough to cover the entire width of each of the unit's legs. If the corners are not firmly seated, the installation feet may be bent.
- The projecting length of the anchor bolt should be less than 30 mm.
- Hole-in anchor bolts are not compatible with this product. However, if fixing brackets are mounted on the 4 locations of the unit attachment part, hole-in anchor bolts can be used.
- The detachable leg can be removed at the site.
- Detaching the detachable leg
  Loosen the three screws to detach the detachable leg (Two each in the front and back).
  If the base leg finish is damaged when detaching, be sure to repair at the site.

⚠WARNING

- **Be sure to install unit in a place strong enough to withstand its weight.**
  Any lack of strength may cause unit to fall down, resulting in a personal injury.
- **Have installation work in order to protect against strong winds and earthquakes.**
  Any installation deficiency may cause unit to fall down, resulting in a personal injury.

When building the foundation, give full attention to the floor strength, drain water disposal <during operation, drain water flows out of the unit>, and piping and wiring routes.

Precautions when routing the pipes and wires below the unit (Without detachable leg)
When routing the pipes and wires below the unit, be sure that the foundation and base work do not block the base through-holes. Also make sure the foundation is at least 100 mm high so that the piping can pass under the unit.

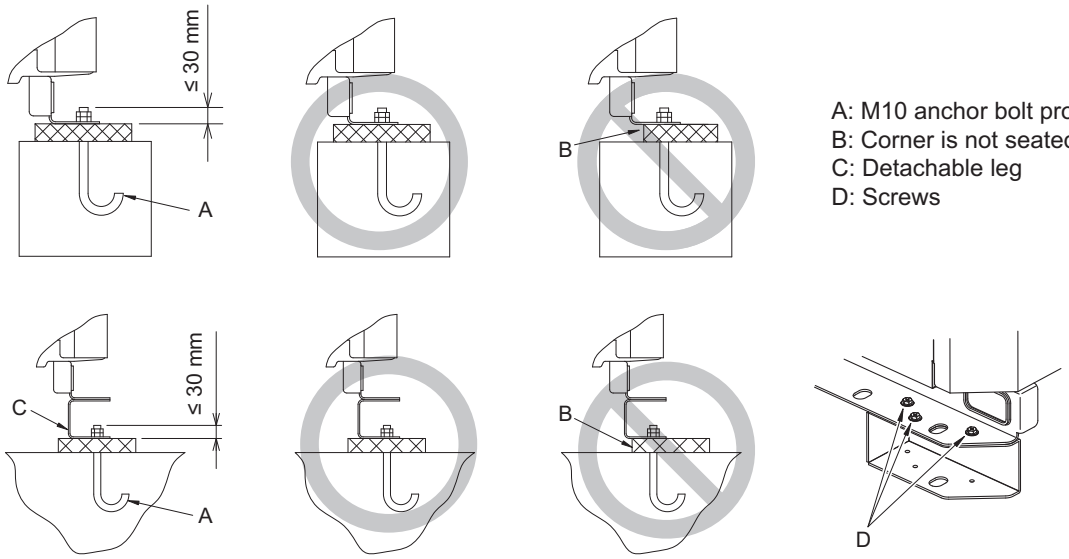

A: M10 anchor bolt procured at the site.
B: Corner is not seated.
C: Detachable leg
D: Screws

(1) Position of anti-vibration pads

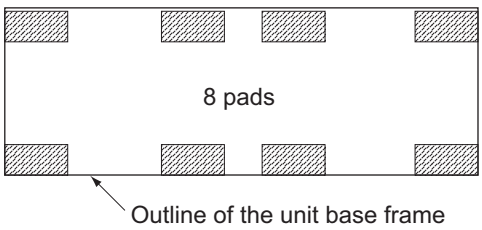

3-3. Removing the metal plates and saddles around the compressor

The metal plates and saddles are used only for transportation. Remove the metal plates and saddles before operating the unit to keep the unit from vibrating excessively.

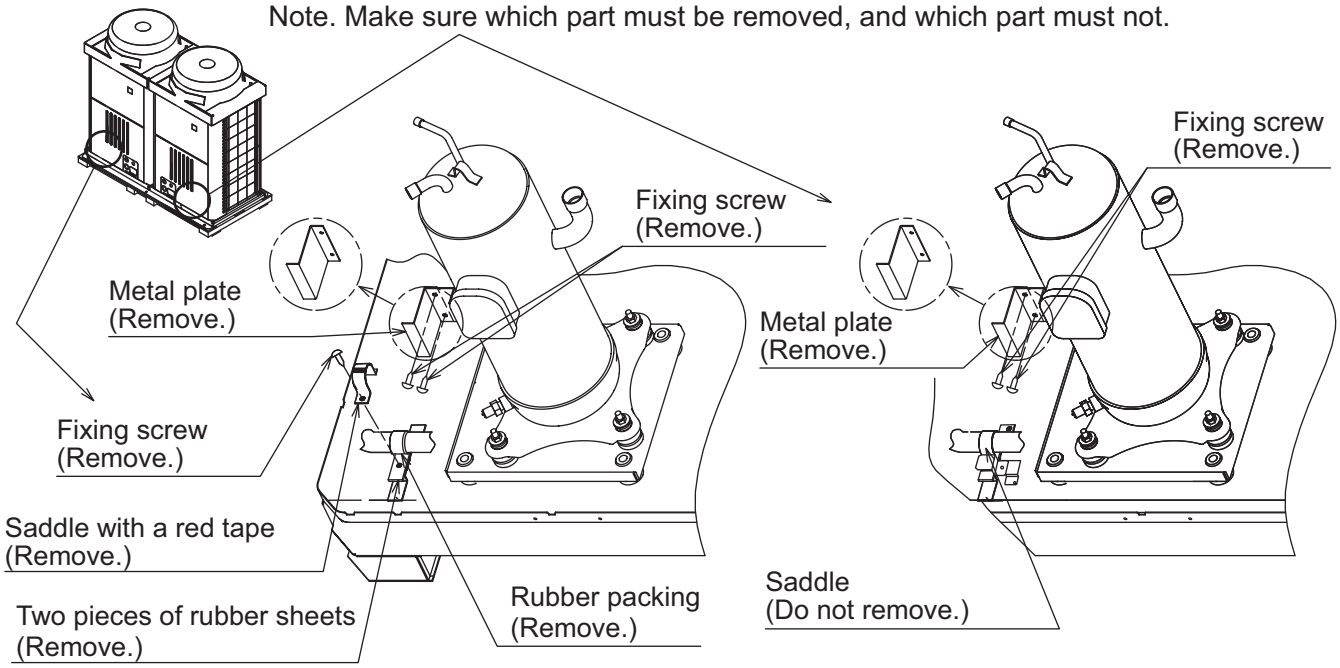

3-4. Installing the unit in a snow area

In snowy areas, sufficient protection against snow and winds should be provided to ensure proper operation.
Even in other areas, appropriate measures should be taken to minimize the effects of winds and snow to ensure normal operation.
To ensure proper operation, install a field-supplied outlet/inlet duct if the unit is directly exposed to wind, rain, or snow and is operated in the cooling mode with the outside air temperature of 10ºC or below.

(Note)
- Install the unit on a base approximately twice as high as the expected snowfall. The base must be made of angle steel or something to let snow and wind slip through the structure. The base width must not exceed the unit size, otherwise snow will accumulate on the base.
- Install the unit so that the outlet/inlet faces away from the wind.

CAHV-P500YB-HPB(-BS)

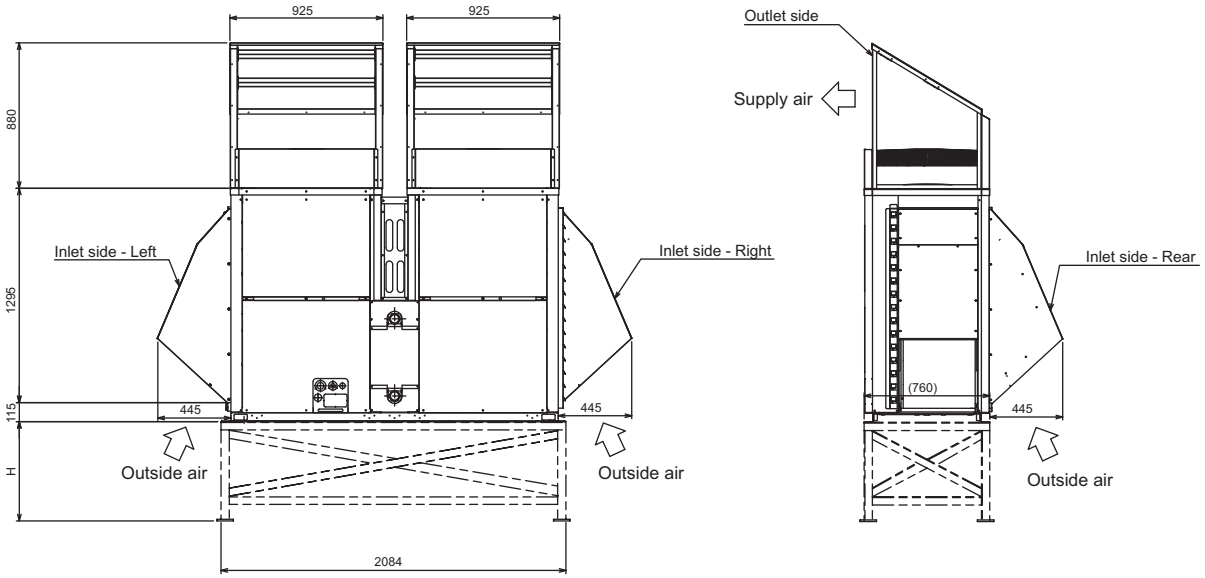

(Note)
1. Install the unit so that the outlet/inlet faces away from the wind. Secure enough space around the unit to avoid a short cycle.
2. Do not install the unit in a place where snow may fall from the roof. Also, remove the snow on the unit before it accumulates.
3. Refer to the figure above when installing the base on site.

4. System Design

4-1. Water Pipe Installation

4-1-1. Caution for water pipe installation

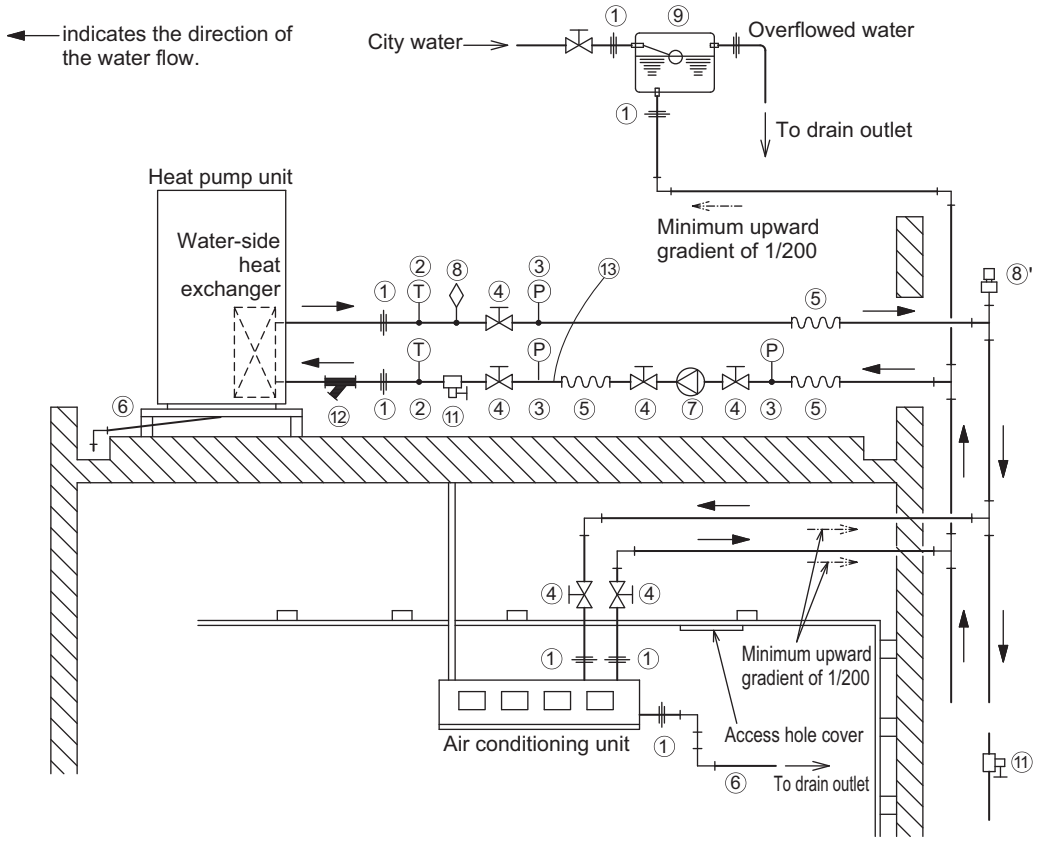

① Union joints/flange joints etc.	Required to allow for a replacement of equipment.
② Thermometer	Required to check the performance and monitor the operation of the units.
③ Water pressure gauge	Recommended for checking the operation status.
④ Valve	Required to allow for a replacement or cleaning of the flow adjuster.
⑤ Flexible joint	Recommended to prevent the noise and vibration from the pump from being transmitted.
⑥ Drain pipe	Install the drain pipe with a downward inclination of between 1/100 and 1/200. To prevent drain water from freezing in winter, install the drain pipe as steep an angle as practically possible and minimize the straight line. For cold climate installation, take an appropriate measure (e.g., drain heater) to prevent the drain water from freezing.
⑦ Pump	Use a pump that is large enough to compensate for the total water pressure loss and supply sufficient water to the unit.
⑧ Air vent valve	Install air venting valves to the places where air can accumulate. Automatic air vent valves (such as ⑧') are effective.
⑨ Expansion tank	Install an expansion tank to accommodate expanded water and to supply water.
⑩ Water pipe	Use pipes that allow for easy air purging, and provide adequate insulation.
⑪ Drain valve	Install drain valves so that water can be drained for servicing.
⑫ Strainer	Install a strainer near the unit to keep foreign materials from entering the water-side head exchanger (supplied).
⑬ Flow switch	Required to protect the unit.

4-1-2. Notes on pipe corrosion

Water treatment and water quality control

When the circulating water quality is poor, the water heat exchanger can develop scales, leading to a reduction in heat-exchange power and possible corrosion of the heat exchanger. Please pay careful attention to water processing and water quality control when installing the water circulation system.

♦Removal of foreign objects or impurities within the pipes.
During installation, be careful that foreign objects, such as welding fragments, sealant particles, or rust, do not enter the pipes.

♦Water Quality Control

(1) Depending on the quality of water used, the heat exchanger may become corroded or scaled up.
We recommend regular water quality processing.
Water circulation systems using open heat storage tanks are particularly prone to corrosion.
When using an open-type heat storage tank, install a water-to-water heat exchanger, and use a closed-loop circuit on the air conditioner side. If a water supply tank is installed, keep contact with air to a minimum, and keep the level of dissolved oxygen in the water no higher than 1 mg/ℓ.

(2) Water quality standard

Items			Lower mid-range temperature water system Water Temp. ≤ 60ºC		Higher mid-range temperature water system Water Temp. > 60ºC		Tendency	
			Recirculating water	Make-up water	Recirculating water	Make-up water	Corrosive	Scale-forming
Standard items	pH (25 ˚C)		7.0 ~ 8.0	7.0 ~ 8.0	7.0 ~ 8.0	7.0 ~ 8.0	○	○
	Electric conductivity	(mS/m) (25 ˚C) (μs/cm) (25 ˚C)	30 or less [300 or less]	30 or less [300 or less]	30 or less [300 or less]	30 or less [300 or less]	○	○
	Chloride ion	(mg Cl^-/ℓ)	50 or less	50 or less	30 or less	30 or less	○	
	Sulfate ion	(mg $SO4^{2-}$/ℓ)	50 or less	50 or less	30 or less	30 or less	○	
	Acid consumption (pH4.8)	(mg $CaCO_3$/ℓ)	50 or less	50 or less	50 or less	50 or less		○
	Total hardness	(mg $CaCO_3$/ℓ)	70 or less	70 or less	70 or less	70 or less		○
	Calcium hardness	(mg $CaCO_3$/ℓ)	50 or less	50 or less	50 or less	50 or less		○
	Ionic silica	(mg SiO_2/ℓ)	30 or less	30 or less	30 or less	30 or less		○
Reference items	Iron	(mg Fe/ℓ)	1.0 or less	0.3 or less	1.0 or less	0.3 or less	○	○
	Copper	(mg Cu/ℓ)	1.0 or less	1.0 or less	1.0 or less	1.0 or less	○	
	Sulfide ion	(mg S^{2-}/ℓ)	Not to be detected	Not to be detected	Not to be detected	Not to be detected	○	
	Ammonium ion	(mg NH_4^+/ℓ)	0.3 or less	0.1 or less	0.1 or less	0.1 or less	○	
	Residual chlorine	(mg Cl/ℓ)	0.25 or less	0.3 or less	0.1 or less	0.3 or less	○	
	Free carbon dioxide	(mg CO_2/ℓ)	0.4 or less	4.0 or less	0.4 or less	4.0 or less	○	
	Ryzner stability index		-	-	-	-	○	○

Reference: Guideline of Water Quality for Refrigeration and Air Conditioning Equipment. (JRA GL02E-1994)

(3) Please consult with a water quality control specialist about water quality control methods and water quality calculations before using anti-corrosive solutions for water quality management.

(4) When replacing a previously installed air conditioning device (even when only the heat exchanger is being replaced), first conduct a water quality analysis and check for possible corrosion.
Corrosion can occur in water systems even if there has been no prior signs of corrosion.
If the water quality level has dropped, please adjust water quality sufficiently before replacing the unit.

(5) Suspended solids in the water

Sand, pebbles, suspended solids, and corrosion products in water can damage the heating surface of the heat exchanger and cause corrosion. Install a good quality strainer (20 mesh or better) at the inlet of the unit to filter out suspended solids.

Removing foreign substances from the water system

Consider installing a settlement tank or a bypass strainer to remove foreign substances from the water system. Select a strainer capable of handling two to three percent of the circulating water. The figure below shows a sample system with a bypass strainer.

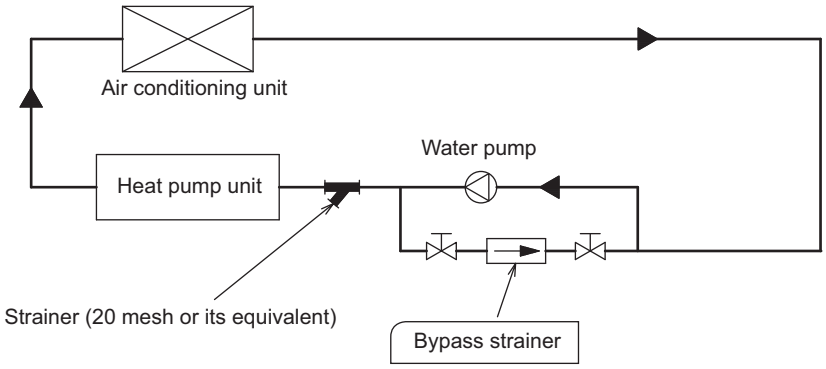

(6) Connecting pipes made from different materials

If different types of metals are placed in direct contact with each other, the contact surface will corrode.
Install an insulating material between pipes that are made of different materials to keep them out of direct contact with each other.

4-1-3. Installing the water pipes

1. Installing the strainer

Install the supplied strainer on the inlet water pipe near the unit to filter out suspended solids and prevent clogging or corrosion of the heat exchanger.
Install the strainer in a way that allows for easy access for cleaning, and instruct the user to clean it regularly.
Operating the units with a clogged strainer may cause the units to make an abnormal stop.
Select a location to install a strainer, taking into consideration the installation angle, insulation thickness, and maintenance space.
* The dimensions given below indicate the amount of space necessary when screwing in a Y-shaped strainer.

<Unit: mm>

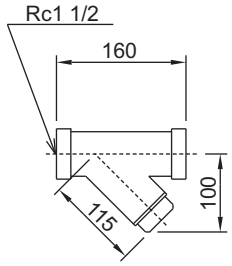

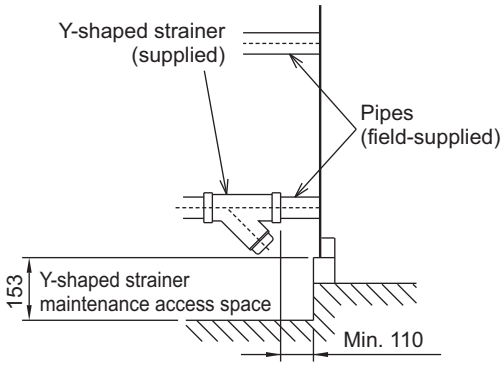

Sample installation 1

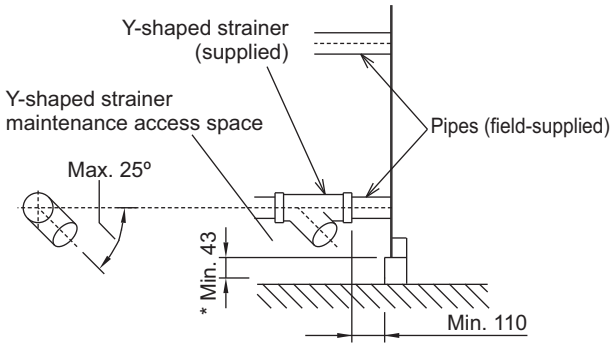

Sample installation 2

2. Installing a flow switch

Install a flow switch that meets the following specifications on the water pipe.
Connect the flow switch to the flow switch contact on the unit.

Minimum flow rate = 7.5 m³/h (125 L/min)
Unit usage range (water flow rate): 7.5 - 15.0 m³/h

4-1-4. Water pipe hole size and location

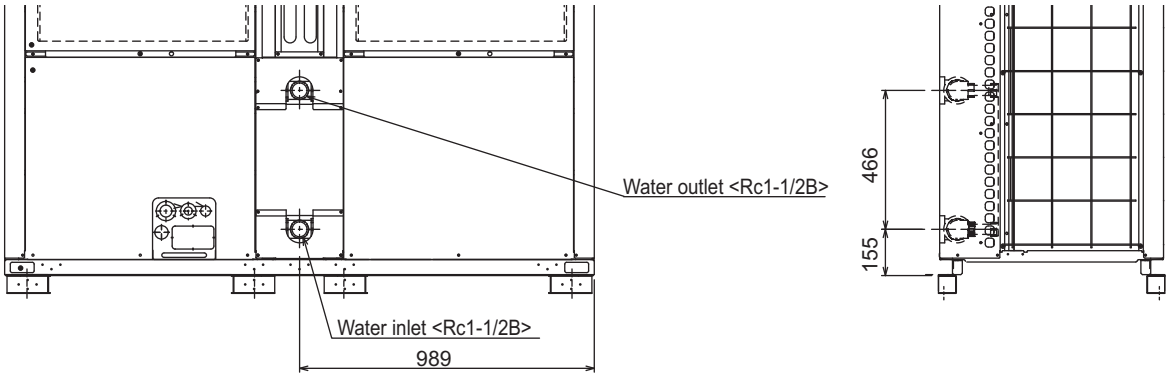

4-2. Ensuring enough water in the water circuit

1. Required amount of water

If the amount of water in the water circuit (circulating water circuit) is insufficient, the unit operation hours may become shorter or the amount of water temperature change to be controlled may become extremely large. Also, the defrost operation during the heating mode may not function properly. Refer to the table below for the minimum amount of water required in the circuit. If the water pipe is too short to keep enough amount of water, install a cushion tank in the water pipe to ensure enough amount of water.

Model	Minimum amount of water (ℓ)
CAHV-P500YB-HPB(-BS)	360

2. Calculating the required amount of water in the water circuit

The required amount of water in the water circuit can be obtained from the following formula.

(Required amount of water in the water circuit) = (Amount of water that can be held in the water pipe) + (Amount of water that can be held in the heat source unit) + (Amount of water that can be held in the load-side unit)

The amount of water that can be held per meter of the water pipe (ℓ/m)

Pipe size					
3/4B (20A)	1B (25A)	1 1/4B (32A)	1 1/2B (40A)	2B (50A)	1 1/2B (65A)
0.37	0.60	0.99	1.36	2.20	3.62

The amount of water that can be held in the heat source unit (ℓ)

CAHV-P500YB-HPB(-BS)
14

4-3. Inlet/Outlet pipe connection size and material

The table below shows the inlet/outlet pipe connection size.

Inlet/Outlet pipe connection size

Model	Inlet pipe connection	Outlet pipe connection
CAHV-P500YB-HPB(-BS)	R1 - 1/2 Female screw <SUS304>	R1 - 1/2 Female screw<SUS304>

5. Wiring Design

5-1. System Configurations

1. Types of control cables

Control cable wiring	Remote controller cable	Size	0.3 - 1.25 mm² (Max. 200 m total)
		Recommended cable types	CVV
	M-NET cable between units *1	Size	More than 1.25 mm² (Max. 120 m total)
		Recommended cable types	Shielding wire CVVS, CPEVS or MVVS
	External input wire size		Min. 0.3 mm²
	External output wire size		1.25 mm²

*1. Use a CVVS or CPEVS cable (Max. total length of 200 m) if there is a source of electrical interference near by (e.g., factory) or the total length of control wiring exceeds 120 m.

2. System Configuration

(1) Individual system
* Each unit is operated individually by connecting a dry contact switch/relay to each unit.

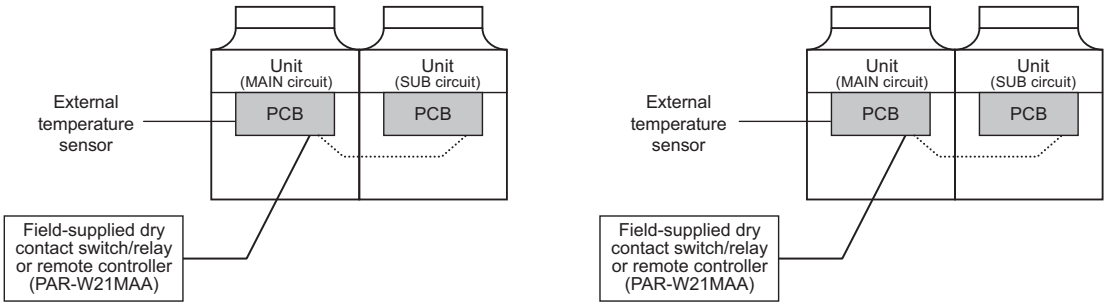

(2) Multiple system (2-16 units)
* A group of unit that consists of one main unit and up to 15 sub units is operated collectively by connecting a representative water temperature sensor and a dry contact switch/relay to the main unit.

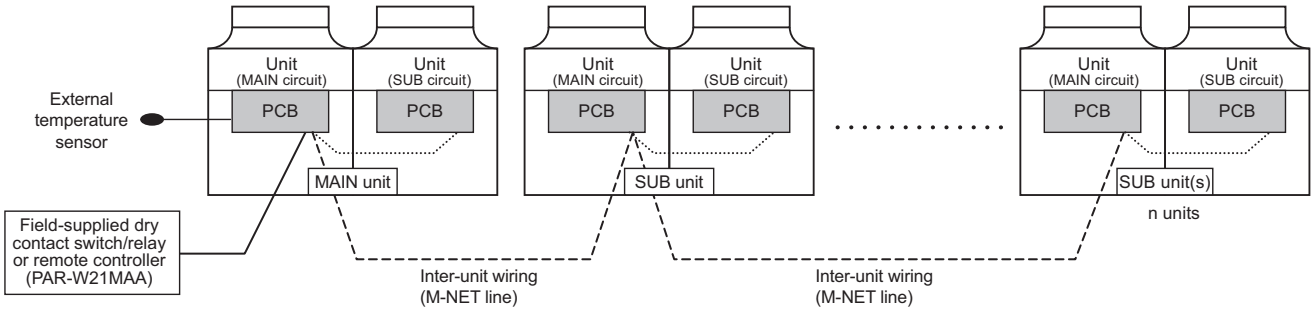

5-2. Electrical Wiring Installation

5-2-1. Wiring of main power supply and equipment capacity

Schematic Drawing of Wiring (Example)

Ⓐ: Switch (Breakers for wiring and current leakage)
Ⓑ: Breakers for current leakage
Ⓒ: Outdoor unit
Ⓓ: Pull box
Ⓔ: Indoor unit

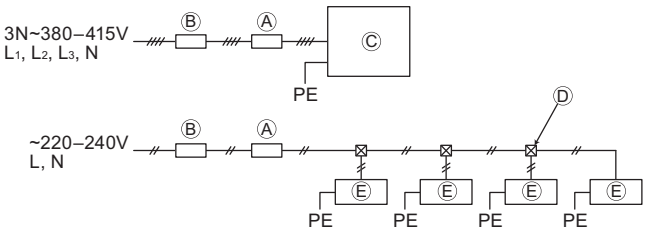

Thickness of wire for main power supply, capacities of the switch and system impedance

Model	Minimum wire thickness (mm²)			Breaker for current leakage	Local switch (A)		Breaker for wiring (NFB) (A)	Max. Permissive System Impedance
	Main cable	Branch	Ground		Capacity	Fuse		
CAHV-P500YB-HPB	25	-	25	75 A 100 mA 0.1 sec. or less	75	75	75	0.28 Ω

1) Use a dedicated power supplies for the unit. Ensure each units are wired individually.
2) Bear in mind ambient conditions (ambient temperature, direct sunlight, rain water, etc.) when proceeding with the wiring and connections.
3) The wire size is the minimum value for metal conduit wiring. If the voltage drops, use a wire that is one rank thicker in diameter. Make sure the power-supply voltage does not drop more than 10%.
4) Specific wiring requirements should adhere to the wiring regulations of the region.
5) Power supply cords of parts of appliances for outdoor use shall not be lighter than polychloroprene sheathed flexible cord (design 60245 IEC57).
6) A switch with at least 3 mm contact separation in each pole shall be provided by the Air Conditioner installer.
7) Do not install a phase advancing capacitor on the motor. Doing so may damage the capacitor and result in fire. The figure in the parentheses indicates the capacity necessary when the "Maximum capacity operation" setting is selected.

⚠WARNING

- Be sure to use specified wires for connections and ensure no external force is imparted to terminal connections. If connections are not fixed firmly, heating or fire may result.
- Be sure to use the appropriate type of overcurrent protection switch. Note that generated overcurrent may include some amount of direct current.

⚠CAUTION

- Some installation sites may require attachment of an earth leakage breaker for the inverter. If no earth leakage breaker is installed, there is a danger of electric shock.
- Do not use anything other than a breaker and fuse with the correct capacity. Using a fuse or wire of too large capacity may cause malfunction or fire.

Note

- This device is intended for the connection to a power supply system with a maximum permissible system impedance shown in the above table at the interface point (power service box) of the user's supply.
- The user must ensure that this device is connected only to a power supply system which fulfils the requirement above. If necessary, the user can ask the public power supply company for the system impedance at the interface point.
- This equipment complies with IEC 61000-3-12 provided that the short-circuit power SSC is greater than or equal to SSC (*2) at the interface point between the user's supply and the public system. It is the responsibility of the installer or user of the equipment to ensure, by consultation with the distribution network operator if necessary, that the equipment is connected only to a supply with a short-circuit power SSC greater than or equal to SSC (*2).

Ssc (*2)

Model	Ssc (MVA)
CAHV-P500YB-HPB	4.11

5-2-2. Cable Connections

(1) Terminal Block Arrangement

To remove the front panel of the control box, unscrew the four screws and pull the panel forward and then down.

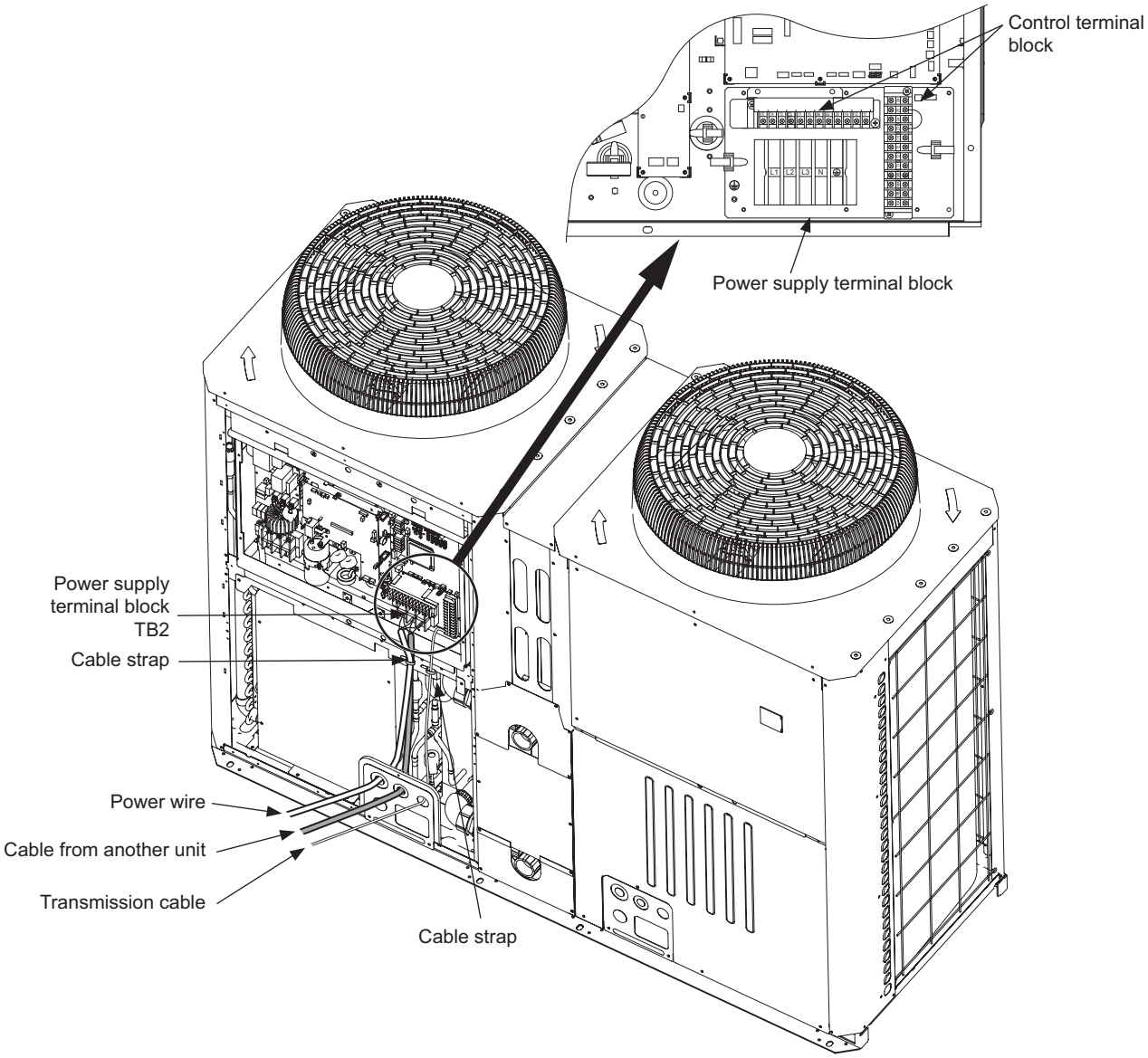

Important: Power supply cables larger than 25 mm^2 in diameter are not connectable to the power supply terminal block (TB2). Use a pull box to connect them.

(2) Installing the conduit tube

- Punch out the knockout hole for wire routing at the bottom of the front panel with a hammer.
- When putting wires through knockout holes without protecting them with a conduit tube, deburr the holes and protect the wires with protective tape.
- If damage from animals is a concern, use a conduit tube to narrow the opening.

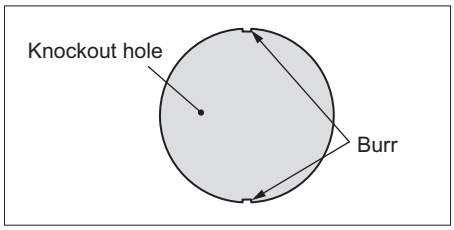

6. Controller

6-1. PAR-W21MAA specifications

Item	Description	Operations	Display
ON/OFF	Runs and stops the operation of a group of units	○	○
Operation mode switching	Switches between Hot Water/Heating/Heating ECO/Anti-freeze/Cooling * Available operation modes vary depending on the unit to be connected. * Switching limit setting can be made via a remote controller.	○	○
Water temperature setting	Temperature can be set within the ranges below. (in increments of 1°C or 1°F) Hot Water 30°C ~ 70°C Heating 30°C ~ 45°C Heating ECO 30°C ~ 45°C Anti-freeze 10°C ~ 45°C Cooling 10°C ~ 30°C * The settable range varies depending on the unit to be connected.	○	○
Water temperature display	10°C ~ 90°C (in increments of 1°C or 1°F) * The settable range varies depending on the unit to be connected.	×	○
Permit/Prohibit local operation	Individually prohibits operations of each local remote control function: ON/OFF, Operation modes, water temperature setting, Circulating water replacement warning reset. * Upper level controller may not be connected depending on the unit to be connected.	×	○
Weekly scheduler	ON/OFF/Water temperature setting can be done up to 6 times one day in the week. (in increments of a minute)	○	○
Error	When an error is currently occurring on a unit, the afflicted unit and the error code are displayed.	×	○
Self check (Error history)	Searches the latest error history by pressing the CHECK button twice.	○	○
Test run	Enables the Test run mode by pressing the TEST button twice. * Test run mode is not available depending on the unit to be connected.	○	○
LANGUAGE setting	The language on the dot matrix LCD can be changed. (Seven languages) English/German/Spanish/Russian/Italian/French/Swedish	○	○
Operation locking function	Remote controller operation can be locked or unlocked. • All-switch locking • Locking except ON/OFF switch	○	○

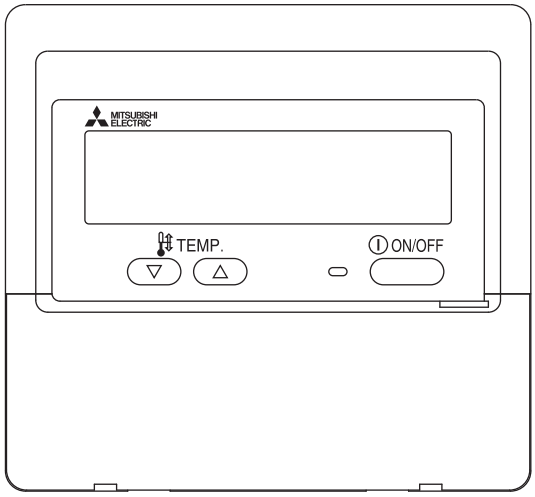

Panel closed

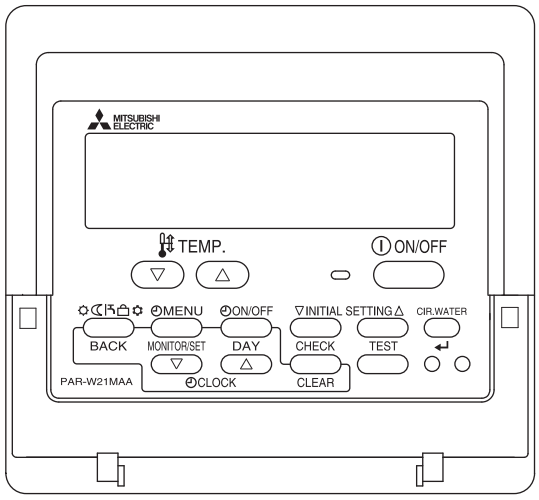

Panel open

for a greener tomorrow

Eco Changes is the Mitsubishi Electric Group's environmental statement, and expresses the Group's stance on environmental management. Through a wide range of businesses, we are helping contribute to the realization of a sustainable society.

⚠Warning

■ Do not use refrigerant other than the type indicated in the manuals provided with the unit and on the nameplate.
- Doing so may cause the unit or pipes to burst, or result in explosion or fire during use, repair, or at the time of disposal of the unit.
- It may also be in violation of applicable laws.
- MITSUBISHI ELECTRIC CORPORATION cannot be held responsible for malfunctions or accidents resulting from the use of the wrong type of refrigerant.

■ Our air conditioning equipment and heat pumps contain a fluorinated greenhouse gas, R407C.

MITSUBISHI ELECTRIC CORPORATION

www.MitsubishiElectric.com

MEES18K003

New publication effective May 2018
Specifications subject to change without notice