High efficiency filter element PAC-SH59KF-E

Photo

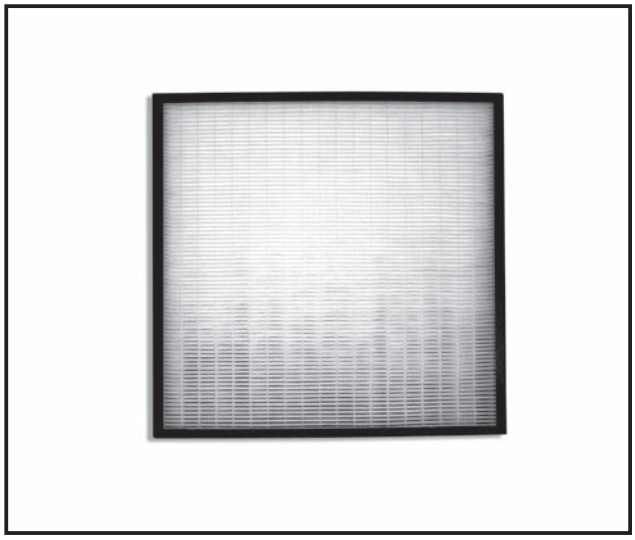

Descriptions

High Efficiency Filter is part that remove dust in air.
PAC-SH53TM-E (multi-function casement) is reguired for installation.

Applicable Models

■ PLA-A**BA

Specifications

Dust collection efficiency	Colorimetric method 65% (JIS 11 class)
Filter element ,aterial	Electrrostatic polyolefin fiber
Life	Approx 2,500 hours (at dust density 0.15 mg/m3) *Reproduction not possible
Parts composition	This element x 1

Dimensions

Unit : mm

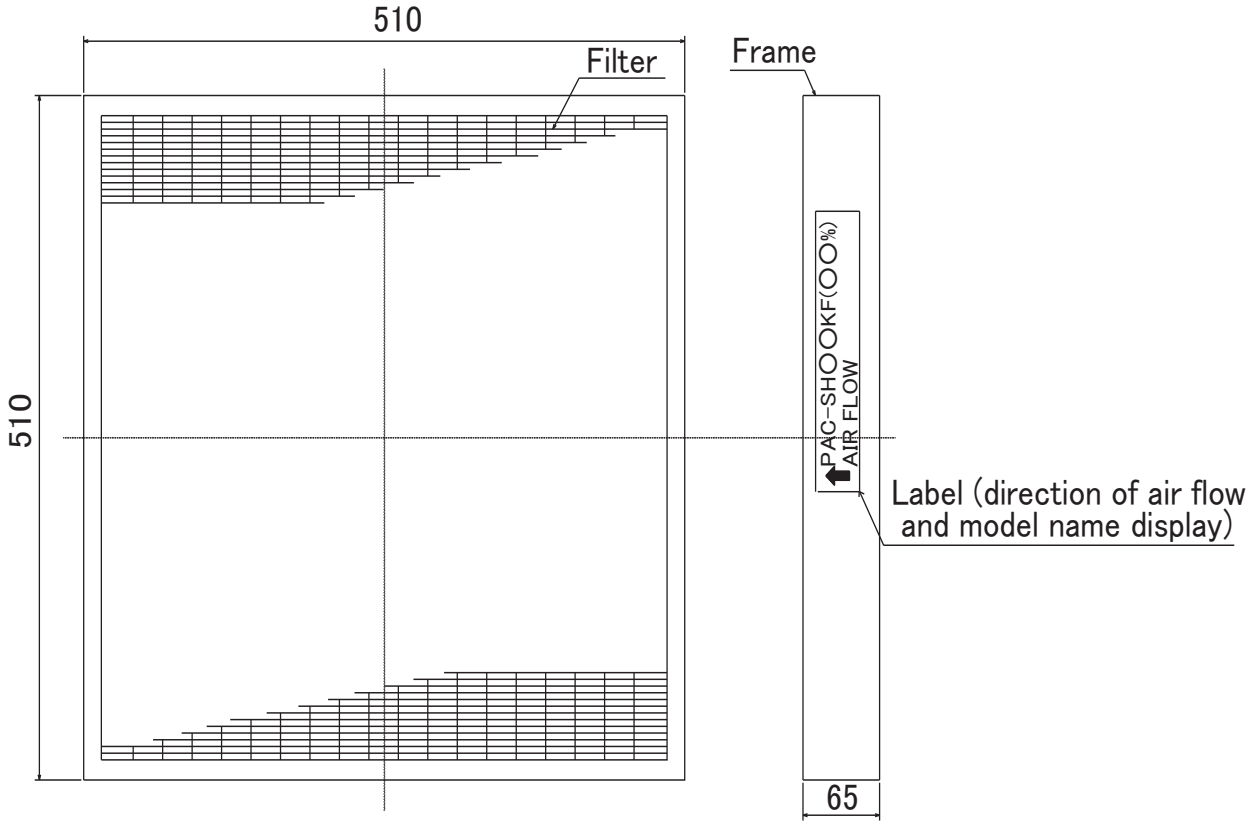

How to Use / How to Install

1 Parts check.

(The unit is provided with this manual and following parts in the box.)

Part #, Name	High-efficiency filter element
Q'ty	1
Figure	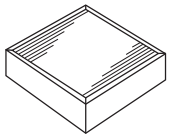

NOTICE

(1) In case that the High-efficiency filter element is installed, it should be installed on the Multi-functional casement which is option.
Be sure to purchase the Multi-functional casement.

2 Installation of High-efficiency filter element (same procedure for replacement)

- ●Remove the intake grille of the Decorative panel in advance.
  (See the "installation instructions of decoration panel" for details.)
- ●Loosen the four screws of bracket for installation of the High-efficiency filter element of the Multi-functional casement as shown right. Then, slide them outside.
- ●Set the High-efficiency filter element in Multi-functional casement, slide the plate inward, and then tighten the four screws securely.
- ※When the indoor unit is used with "2 ways" air outlet, the High-efficiency filter element is not available.
- ※When the High-efficiency filter element is installed, the operation noise can be larger.
- ※When attaching the High-efficiency filter element, check the direction of air flow, referring to the stamp on the side.

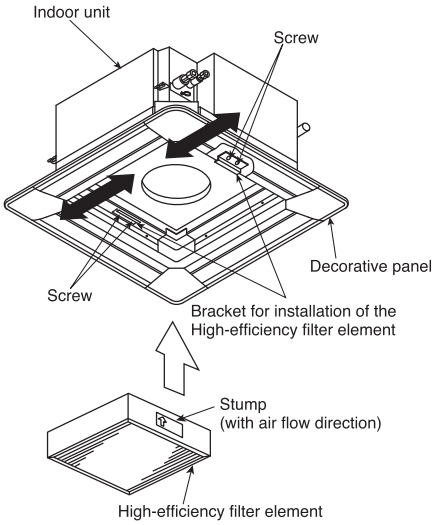

3 Air flow volume setting when High-efficiency filter element is installed

※When the High-efficiency filter element is attached for the first time, the setting for increase in airflow rate must be performed.
※This setting is necessary only when the element is newly attached: No setting is required when the filter is replaced.

⚠CAUTION	Set up for increasing air flow volume
	●If the set up is not done correctly, the air flow volume will decrease and it can lower the performance and cause dew drop.

1） If the indoor unit to be combined is BA series:
- ●Setting must be performed from the remote control: See the pages of "Function Selection" in the installation manual provided with the remote control. (Set optional assembly to "Yes".)

2） If the indoor unit to be combined is other than above:
- ●Set switch "SWC" on the address board in indoor unit to the "option" ② side ("standard" at the factory).

4 Replacement Period

- ●The High-efficiency filter element is single-use (not recyclable).
- ●The reference for operation time is 2,500 hours (depending on the environment in which the air-conditioner is installed).

⚠CAUTION	Do not wash with water.
	●Washing with water will degrade the performance and could cause the element to become unusable.