SERVICE PARTS LIST FOR MITSUBISHI ELECTRIC PACKAGED AIR-CONDITIONERS

Series : PWFY-P•NMU-E2-AU

REVISED

May 2018

BWE01520A

INDEX
PWFY-P36NMU-E2-AU PWFY-P72NMU-E2-AU

MITSUBISHI ELECTRIC

Part information update day : 2018/05/22

Please change the old catalog (issued Aug. 2015, No.BWE015200) to this new catalog.
Content of revision : Some of parts are changed.

EXTERNAL PARTS

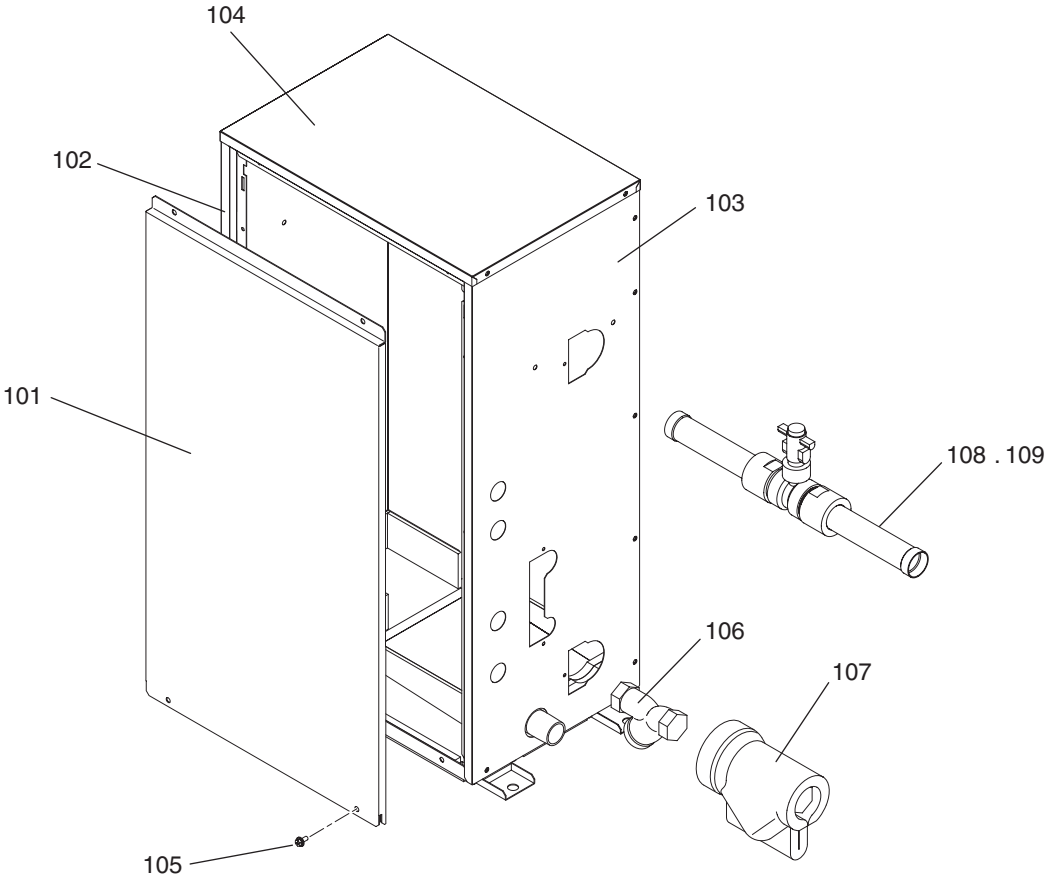

EXTERNAL PARTS

No.	Part No.	G : RoHS Apply Only W : RoHS Apply by Running Change	Part Name	Spec.	PWFY-P36NMU-E2-AU	PWFY-P72NMU-E2-AU					Dwg. No.	Notes for the models	Revision info.
101	R61 257 651	G	Panel assy F		1	1					KJ00L170G01		
102	R61 258 651	G	Panel assy R		1	1					KJ00L171G01		
103	R61 259 651	G	Panel assy SR		1	1					KJ00L172G01		
104	R61 260 651	G	Panel T		1	1					KB02L999H04		
105	R63 007 087	G	H Screw	5×10 KNURLED (30Pcs)	1	1					KB00H418G14		
106	R61 017 454	G	Strainer		1	1					P641136X01		Chg.
107	R61 006 600	G	Insulator		1	1					KB33L902G02		
108	R61 023 541	G	Flow switch assy	AU series only (VK320M)	1						KD00F353G01		
109	R61 024 541	G	Flow switch assy	AU series only (VK332M)		1					KD00F353G02		

FUNCTIONAL PARTS

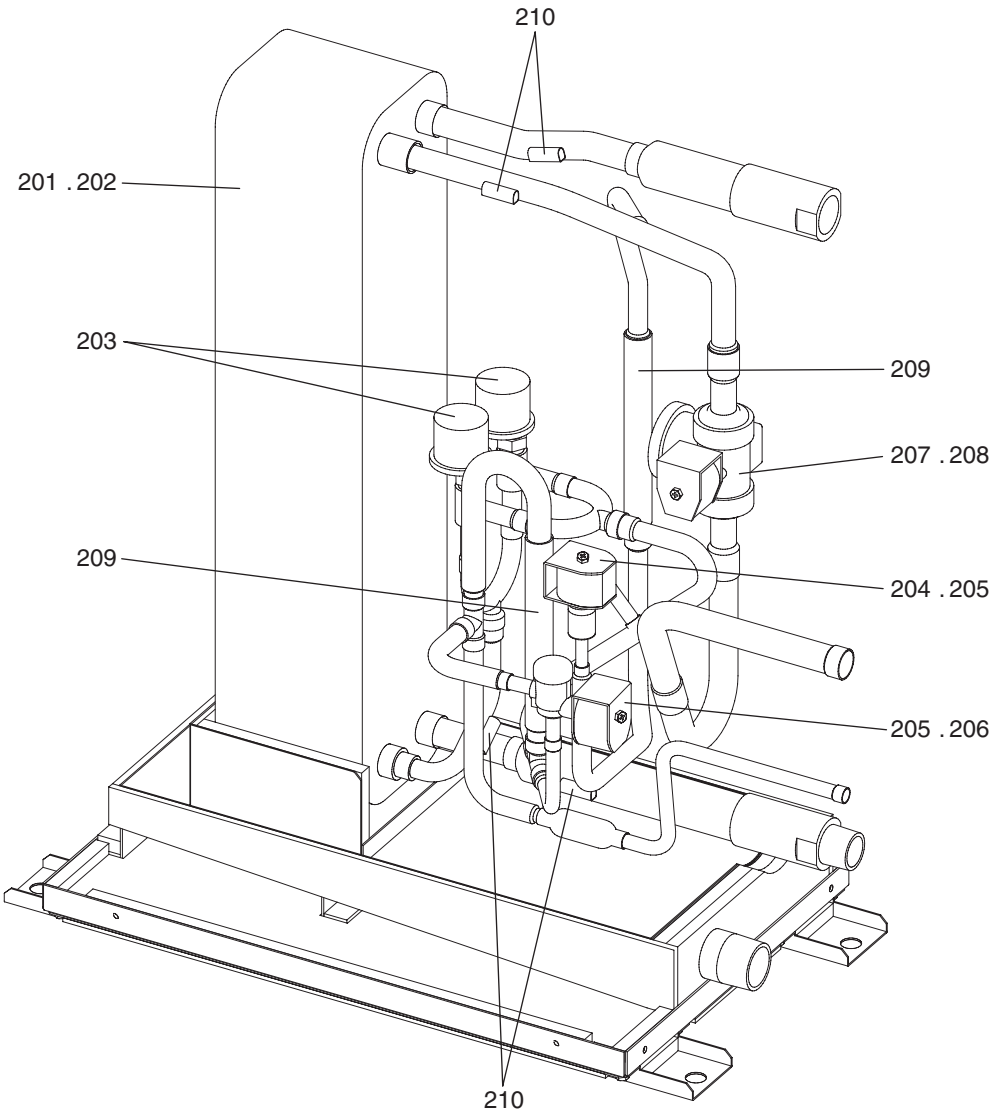

FUNCTIONAL PARTS

No.	Part No.	G : RoHS Apply Only W : RoHS Apply by Running Change	Part Name	Spec.	PWFY-P36NMU-E2-AU	PWFY-P72NMU-E2-AU					Dwg. No.	Notes for the models	Revision info.
201	R61 865 480	G	Heat exchanger assy		1						KB00U710G03		
202	R61 866 480	G	Heat exchanger assy			1					KB00U710G04		
203	R63 004 401	G	Linear expansion valve	EFM-80YGMD-4	1	2					P632453X01	<LEV1Wa,b>	
204	R63 001 921	G	Solenoid valve	VPV-603DQ3	1	1					P631295X01	<SV1>	
205	R61 011 243	G	Solenoid valve coil	VPV-MOAQ540UA1	2	2					P472047X01	<SV1,SVL>	
206	R61 040 232	G	Solenoid valve	VPV-803DQ50	1	1					P631300X01	<SVL>	
207	R61 092 232	G	Solenoid valve	SR56PG-06WR	1	1					P631338X01	<SVG>	Chg.
208	R61 005 243	W	Solenoid valve coil	SR66PF-05B-2	1	1					P472044X02	<SVG>	
209	R61 005 418	G	Check valve	YAV-P11Y5HMD-1	2	2					P633133X01	<CV1,CV2>	
210	R61 060 200	G	Thermistor		4	4					P418065X01	<TH6,TH8,TH22,TH23>	

CONTROL BOX PARTS

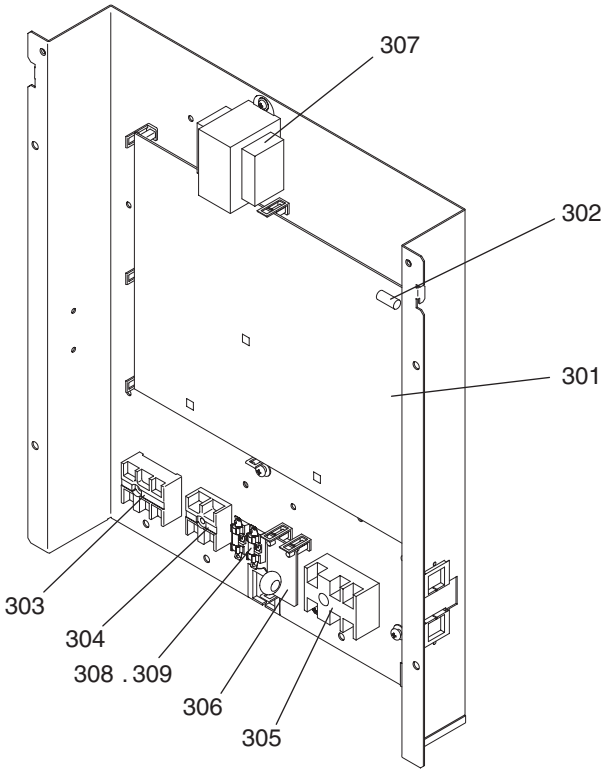

CONTROL BOX PARTS

No.	Part No.	G : RoHS Apply Only W : RoHS Apply by Running Change	Part Name	Spec.	PWFY-P36NMU-E2-AU	PWFY-P72NMU-E2-AU					Dwg. No.	Notes for the models	Revision info.
301	R61 391 280		Control board		1	1					KE80C274G14		
302	R61 021 239	G	Fuse	6.3A AC250V T	1	1					S423001H30	<F01>	Chg.
303	R61 003 246	G	Terminal block		1	1					BG00R200G45	<TB5>	
304	R61 004 246	G	Terminal block		1	1					BG00R200G15	<TB15>	
305	R61 020 246	W	Terminal block		1	1					KE00D619G01	<TB2>	
306	R63 Y22 280	G	DSA board		1	1					W849072G13		
307	R61 004 260	G	Transformer	240V/23.2V	1	1					P715419X01	<T01>	
308	R61 005 239	G	Fuse	3.15A AC250V T	2	2					S423001H39	<F02,F03>	
309	R61 Y08 241	G	Fuse holder		2	2					S423003H05		

MITSUBISHI ELECTRIC CORPORATION

BWE01520A (20180531)