MITSUBISHI ELECTRIC

Changes for the Better

AIR CONDITIONER

2024

R410A

Service Handbook

Model

PURY-P72, P96, P120, P144, P168T(Y)NU-A/A1

PURY-P192, P216, P240, P264, P288, P312, P336T(Y)SNU-A/A1

PURY-EP72, EP96, EP120, EP144, EP168, EP192, EP216, EP240T(Y)NU-A/A1

PURY-EP192, EP216, EP240, EP264, EP288, EP312, EP336, EP384, EP432T(Y)SNU-A/A1

7th edition

Safety Precautions

- Please read the following safety precautions carefully before installing the unit to ensure safety.

⚠ **WARNING**	**Indicates a risk of death or serious injury.**
⚠ **CAUTION**	**Indicates a risk of serious injury or structural damage.**

- Make sure that this manual is passed on to the end user to retain for future reference.
- Retain this manual for future reference. When the unit is reinstalled or repaired, have this manual available to those who provide these services. Make sure that this manual is passed on to any future users.

All electric work must be performed by qualified personnel.
Air tightness test must be performed by qualified personnel.

General Precautions

⚠ WARNING

Do not use refrigerant other than the type indicated in the manuals provided with the unit and on the nameplate. Doing so may cause the unit or pipes to burst, or result in explosion or fire during use, during repair, or at the time of disposal of the unit. It may also be in violation of applicable laws. MITSUBISHI ELECTRIC CORPORATION cannot be held responsible for malfunctions or accidents resulting from the use of the wrong type of refrigerant.

Do not install the unit in a place where large amounts of oil, steam, organic solvents, or corrosive gases, such as sulfuric gas, are present or where acidic/alkaline solutions or sprays containing sulfur are used frequently. These substances can compromise the performance of the unit or cause certain components of the unit to corrode, which can result in refrigerant leakage, water leakage, injury, electric shock, malfunctions, smoke, or fire.

Do not try to defeat the safety features of the unit or make unauthorized setting changes. Forcing the unit to operate the unit by defeating the safety features of the devices such as the pressure switch or the temperature switch, making unauthorized changes to the switch settings, or using accessories other than the ones recommended by Mitsubishi Electric may result in smoke, fire, or explosion.

To reduce the risk of shorting, current leakage, electric shock, malfunctions, smoke, or fire, do not splash water on electric parts.

To reduce the risk of electric shock, malfunctions, smoke or fire, do not operate the switches/buttons or touch other electrical parts with wet hands.

To reduce the risk of pipe burst and explosion, do not allow gas refrigerant and refrigerant oil to be trapped in the refrigerant circuit.

To reduce the risk of burns or frost bites, do not touch the refrigerant pipes or refrigerant circuit components with bare hands during and immediately after operation.

To reduce the risk of burns, do not touch any electrical parts with bare hands during or immediately after stopping operation.

To reduce the risk of injury from falling tools, keep children away while installing, inspecting, or repairing the unit.

Keep the space well ventilated. Refrigerant can displace air and cause oxygen starvation. If leaked refrigerant comes in contact with a heat source, toxic gas may be generated.

Always replace a fuse with one with the correct current rating. The use of improperly rated fuses or a substitution of fuses with steel or copper wire may result in bursting, fire or explosion.

To reduce the risk of electric shock, smoke, and fire due to infiltration of dust and water, properly install all required covers.

To reduce the risk of electric shock, smoke, and fire due to infiltration of dust and water, properly install all required terminal block covers and insulation sheets.

To reduce the risk of electric shock, smoke, and fire due to infiltration of dust and water, properly install all required covers and panels on the terminal box and control box.

To reduce the risk of injury from units falling or falling over, periodically check the installation base for damage.

Consult an authorized agency for the proper disposal of the unit. Refrigerant oil and refrigerant that may be left in the unit pose a risk of fire, explosion, or environmental pollution.

⚠CAUTION

To reduce the risk of fire or explosion, do not place flammable materials or use flammable sprays around the unit.

To reduce the risk of being caught in rotating parts, electric shock, and burns, do not operate the unit without all required panels and guards being installed.

To reduce the risk of injury, do not sit, stand, or place objects on the unit.

The unit described in this manual is not intended for use with food, animals, plants, precision instruments, or art work.

To reduce the risk of water leakage and malfunctions, do not turn off the power immediately after stopping operation. Leave the unit turned on for at least 5 minutes before turning off the power.

Do not install the unit over things that are vulnerable to water damage from condensation dripping.

To reduce the risk of injury, electric shock, and malfunctions, do not touch or allow cables to come in contact with the edges of components.

To reduce the risk of injury, do not touch the heat exchanger fins or sharp edges of components with bare hands.

Always wear protective gears when touching electrical components on the unit. Several minutes after the power is switched off, residual voltage may still cause electric shock.

To reduce the risk of electric shock and burns, always wear protective gear when working on units.

To reduce the risk of injury, do not insert fingers or foreign objects into air inlet/outlet grills. If the unit is left on a damaged base, it may fall and cause injury.

To reduce the risk of injury, always wear protective gear when working on units.

Do not release refrigerant into the atmosphere. Collect and reuse the refrigerant, or have it properly disposed of by an authorized agency. Refrigerant poses environmental hazards if released into the air.

Transportation and Installation

⚠WARNING

Lift the unit by placing the slings at designated locations. Support the outdoor unit securely at four points to keep it from slipping and sliding. If the unit is not properly supported, it may fall and cause personal injury.

⚠CAUTION

To reduce the risk of injury, do not carry the product by the PP bands that are used on some packages.

To reduce the risk of injury, products weighing 20 kg (44 lbs) or more should be carried by two or more people.

Installation

⚠WARNING

Do not install the unit where there is a risk of leaking flammable gas.
If flammable gas accumulates around the unit, it may ignite and cause a fire or explosion.

To reduce the risk of injury from coming in contact with units, install units where they are not accessible to people other than maintenance personnel.

To reduce the risk of injury, properly dispose of the packing materials so that children will not play with them.

Properly dispose of the packing materials. Plastic bags pose suffocation hazard to children.

All drainage work should be performed by the dealer or qualified personnel according to the instructions detailed in the Installation Manual. Improper drainage work may cause water leakage and resultant damage to the furnishings.

Remove packing materials from the unit before operating the unit. Note that some accessories may be taped to the unit. Properly install all accessories that are required. Failing to remove the packing materials or failing to install required accessories may result in refrigerant leakage, oxygen deprivation, smoke, or fire.

Consult your dealer and take appropriate measures to safeguard against refrigerant leakage and resultant oxygen starvation. An installation of a refrigerant gas detector is recommended.

Any additional parts must be installed by the dealer or qualified personnel. Only use the parts specified by Mitsubishi Electric. Installation by unauthorized personnel or use of unauthorized parts or accessories may result in water leakage, electric shock, or fire.

Take appropriate safety measures against wind gusts and earthquakes to prevent the unit from toppling over and causing injury.

To reduce the risk of injury from units falling or falling over, install the unit on a surface that is strong enough to support its weight.

To reduce the risk of injury from units falling or falling over, periodically check the installation base for damage.

⚠CAUTION

Do not install the unit over things that are vulnerable to water damage. Provide an adequate collective drainage system for the drain water from unit as necessary.

Do not install the unit over things that are vulnerable to water damage. When the indoor humidity exceeds 80% or if the drain water outlet becomes clogged, condensation may drip from the indoor unit onto the ceiling or floor.

To reduce the risk of damage to the unit and resultant electric leak and electric shock, keep small animals, snow, and rain water from entering the unit by closing the gap in the pipe and wire access holes.

To reduce the risk of rain water or drain water from entering the room and damaging the interior, drainage work must be performed by your dealer or qualified personnel according to the instructions detailed in the Installation Manual.

To reduce the risk of drain water overflow, install the unit horizontally, using a level.

Piping Work

⚠WARNING

To reduce the risk of injury, including frost bites, that may result from being blasted with refrigerant, use caution when operating the refrigerant service valve. If refrigerant leaks out and comes in contact with an open flame, toxic gases may be generated.

To reduce the risk of refrigerant catching fire and causing burns, remove the refrigerant gas and the residual refrigerant oil in the pipes before heating them.

To reduce the risk of pipe damage, refrigerant leakage, and oxygen deprivation, use pipes that meet the pipe thickness specifications, which vary by the type of refrigerant used, pipe diameter, and pipe material.

To reduce the risk of pipe burst or explosion, evacuate the refrigerant circuit using a vacuum pump, and do not purge the system with refrigerant.

To reduce the risk of explosion and deterioration of refrigerant oil caused by chloride, do not use oxygen, flammable gas, or refrigerant that contains chloride as a pressurizing gas.

To prevent explosion, do not heat the unit with refrigerant gas in the refrigerant circuit.

To reduce the risk of refrigerant leakage and resultant oxygen deprivation, use the flare nut with holes that is supplied with the refrigerant service valve.

To reduce the risk of refrigerant leakage and resultant oxygen deprivation, use the flare nut that is supplied with the unit or its equivalent that meets applicable standards.

To reduce the risk of damage to the unit, and resultant refrigerant leakage and oxygen deprivation, tighten flare nuts to a specified torque.

To reduce the risk of oxygen deprivation and gas poisoning, check for gas leakage and keep fire sources away.

Insulate pipe connections after completing the air tightness test. Performing an air tightness test with the pipe being insulated may lead to failure to detect refrigerant leakage and cause oxygen deprivation.

To reduce the risk of pipe damage and resultant refrigerant leakage and oxygen deprivation, keep the field-installed pipes out of contact with the edges of components.

⚠CAUTION

To reduce the risk of pipe bursting and explosion due to abnormal pressure rise, do not allow any substances other than R410A (such as air) to enter the refrigerant circuit.

To reduce the risk of water leakage and resultant damage to the furnishings, drain piping work must be performed by your dealer or qualified personnel according to the instructions detailed in the Installation Manual.

To keep the ceiling and floor from getting wet due to condensation, properly insulate the pipes.

Wiring Work

⚠WARNING

To reduce the risk of wire breakage, overheating, smoke, and fire, keep undue force from being applied to the wires.

To reduce the risk of wire breakage, overheating, smoke, or fire, properly secure the cables in place and provide adequate slack in the cables so as not to stress the terminals.

To reduce the risk of injury or electric shock, switch off the main power before performing electrical work.

All electric work must be performed by a qualified electrician according to the local regulations, standards, and the instructions detailed in the Installation Manual. Capacity shortage to the power supply circuit or improper installation may result in malfunction, electric shock, smoke, or fire.

To reduce the risk of electric shock, smoke, or fire, install an earth leakage breaker on the power supply to each unit.

To reduce the risk of electric shock, smoke, or fire, install an earth leakage breaker on the power supply to each unit. (Applicable to inverter units only)

Use properly rated breakers and fuses (earth leakage breaker, local switch <switch + fuse>, no-fuse breaker). The use of a breaker with a breaking capacity greater than the specified capacity may cause electric shock, malfunctions, smoke, or fire.

⚠CAUTION

To reduce the risk of current leakage, wire breakage, smoke, or fire, keep the wiring out of contact with the refrigerant pipes and other parts, especially sharp edges.

Use properly rated breakers and fuses (earth leakage breaker, local switch <switch + fuse>, no-fuse breaker). The use of a breaker with a breaking capacity greater than the specified capacity may cause electric shock, malfunctions, smoke, or fire. (Applicable to inverter units only)

To reduce the risk of current leakage, overheating, smoke, or fire, use properly rated cables with adequate current carrying capacity.

Proper grounding must be provided by a licensed electrician.

Do not connect the grounding wire to a gas pipe, water pipe, lightning rod, or telephone wire. Improper grounding may result in electric shock, smoke, fire, or malfunction due to electrical noise interference.

Relocation and Repairs

⚠WARNING

To reduce the risk of refrigerant leakage, water leakage, injury, electric shock, and fire, units should only be moved or repaired by your dealer or qualified personnel.

To reduce the risk of wire shorting, electric leak, electric shock, smoke, or fire, do not perform maintenance work in the rain.

To reduce the risk of injury, electric shock, and fire, properly reinstall all removed components after completing repair work.

⚠CAUTION

To reduce the risk of wire shorting, electric shock, malfunctions, or fire, keep circuit boards dust free, and do not touch them with your hands or tools.

To reduce the risk of refrigerant and water leakage, check the pipe supports and insulation for damage during inspection or repair, and replace or repair the ones that are found to be deteriorated.

Additional Precautions

To avoid damage to the unit, use appropriate tools to install, inspect, or repair the unit.

To reduce the risk or malfunction, turn on the power at least 12 hours before starting operation, and leave the power turned on throughout the operating season.

Recover all refrigerant in the units, and dispose of it properly according to any applicable laws and regulations.

To reduce the risk of deterioration of refrigerant oil and compressor malfunctions caused by a refrigerant that contains chloride, such as R22, only use R410A.

Provide a maintenance access to allow for the inspection of pipes above the ceiling or the buried pipes.

Take appropriate measures against electrical noise interference when installing the air conditioners in hospitals or facilities with radio communication capabilities. Inverter, high-frequency medical, or wireless communication equipment as well as power generators may cause the air conditioning system to malfunction. Air conditioning system may also adversely affect the operation of these types of equipment by creating electrical noise.

To reduce the risk of damage to the unit, leave the valves on the unit closed until refrigerant charging is completed.

Place a wet towel on the refrigerant service valve before brazing the pipes to keep its temperature from rising above 120ºC and damaging the surrounding equipment.

Direct the blazing torch flame away from the adjacent cables and sheet metal to keep them from being overheated and damaged.

Prepare tools for exclusive use with R410A. Do not use the following tools if they have been used with the conventional refrigerant (R22): gauge manifold, charging hose, refrigerant leak detector, check valve, refrigerant charge spout, vacuum gauge, and refrigerant recovery equipment. R410A does not contain chloride, so leak detectors for use with older types of refrigerants will not detect an R410A leak. Infiltration of the residual refrigerant, refrigerant oil, or water on these tools may cause the refrigerant oil in the new system to deteriorate or damage the compressor. Because R410A operates at a higher pressure than R22, tools not intended for use with R410A may be damaged if used with R410A.

To reduce the risk of the vacuum pump oil backflowing into the refrigerant cycle and causing the refrigerant oil to deteriorate, use a vacuum pump with a check valve.

Have a set of tools for exclusive use with R410A. Consult your nearest Mitsubishi Electric Dealer.

Keep dust, dirt, and water off charging hose and flare tool. Infiltration of dust, dirt, or water into the refrigerant circuit may cause the refrigerant oil to deteriorate or damage the compressor.

Use refrigerant piping and couplings that meet the applicable standards. For refrigerant pipes, use pipes made of phosphorus deoxidized copper. Keep the inner and outer surfaces of pipes and couplings clean and free of such contaminants as sulfur, oxides, dust, dirt, shaving particles, oil, and moisture. Failure to follow these directions may result in the deterioration of refrigerant oil or compressor damage.

Store the piping materials indoors, and keep both ends of the pipes sealed until immediately before brazing. Keep elbows and other joints in plastic bags. Infiltration of dust, dirt, or water into the refrigerant circuit may cause the refrigerant oil to deteriorate or damage the compressor.

Apply ester oil, ether oil, or a small amount of alkyl benzene to flares and flanges. The use and accidental infiltration of mineral oil into the system may cause the refrigerant oil to deteriorate or damage the compressor.

To reduce the risk of oxidized film from entering the refrigerant pipe and causing the refrigerant oil to deteriorate or damaging the compressor, braze pipes under nitrogen purge.

Do not use the existing refrigerant piping. A large amount of chloride that is contained in the residual refrigerant and refrigerant oil in the existing piping may cause the refrigerant oil in the new unit to deteriorate or damage the compressor.

Charge refrigerant in the liquid state. If refrigerant is charged in the gas phase, the composition of the refrigerant in the cylinder will change, compromising the unit's performance.

Do not use a charging cylinder. The use of a charging cylinder will change the composition of the refrigerant, compromising the unit's performance.

Charge the system with an appropriate amount of refrigerant in the liquid phase. Refer to the relevant sections in the manuals to calculate the appropriate amount of refrigerant to be charged. Refrigerant overcharge or undercharge may result in performance drop, abnormal stop of operation, or compressor failure.

To reduce the risk of power capacity shortage, always use a dedicated power supply circuit.

To reduce the risk of both the breaker on the product side and the upstream breaker from tripping and causing problems, split the power supply system or provide protection coordination between the earth leakage breaker and no-fuse breaker.

Have a backup system, if failure of the unit has a potential for causing significant problems or damages.

CONTENTS

Chapter 1 Check Before Servicing

1-1 Preparation for Piping Work 1
1-2 Handling and Characteristics of Piping Materials, Refrigerant, and Refrigerant Oil 3
1-3 Working with Refrigerant Piping 7
1-4 Precautions for Wiring 12
1-5 Cautionary notes on installation environment and maintenance 14
1-6 Inspection and maintenance 15

Chapter 2 Restrictions

2-1 System Configurations 1
2-2 Types and Maximum Allowable Length of Cables 3
2-3 Switch Settings 5
2-4 M-NET Address Settings 6
2-5 Demand Control Overview 12
2-6 System Connection Example 13
2-7 Example System with an MA Remote Controller 14
2-8 Example System with an ME Remote Controller 27
2-9 Example System with an MA and an ME Remote Controller 30
2-10 Restrictions on Refrigerant Pipes 33

Chapter 3 Major Components, Their Functions and Refrigerant Circuits

3-1 External Appearance and Refrigerant Circuit Components of Outdoor Unit 1
3-2 Outdoor Unit Refrigerant Circuit Diagrams 14
3-3 Functions of the Major Components of Outdoor Unit 19
3-4 Functions of the Major Components of Indoor Unit 23
3-5 External Appearance and Refrigerant Circuit Components of BC Controller 24
3-6 BC Controller Refrigerant Circuit Diagrams 27
3-7 Functions of the Major Components of BC Controller 29

Chapter 4 Electrical Components and Wiring Diagrams

4-1 Outdoor Unit Circuit Board Arrangement 1
4-2 Outdoor Unit Circuit Board Components 9
4-3 Outdoor Unit Electrical Wiring Diagrams 25
4-4 Transmission Booster Electrical Wiring Diagrams 45
4-5 BC Controller Circuit Board Arrangement 46
4-6 BC Controller Circuit Board Components 47
4-7 BC Controller Electrical Wiring Diagrams 49

Chapter 5 Control

5-1 Dipswitch Functions and Factory Settings 1
5-2 Outdoor Unit Control 11
5-3 BC Controller Control 29

Chapter 6 Test Run

6-1 Read before Test Run 1
6-2 Operation Characteristics and Refrigerant Charge 2
6-3 Evaluating and Adjusting Refrigerant Charge 2
6-4 The Following Symptoms Are Normal 6

CONTENTS

Chapter 7 Troubleshooting Using Error Codes

7-1 Error Code and Preliminary Error Code Lists 1
7-2 Error Code Definitions and Solutions: Codes [0 - 999] 8
7-3 Error Code Definitions and Solutions: Codes [1000 - 1999] 10
7-4 Error Code Definitions and Solutions: Codes [2000 - 2999] 14
7-5 Error Code Definitions and Solutions: Codes [3000 - 3999] 20
7-6 Error Code Definitions and Solutions: Codes [4000 - 4999] 23
7-7 Error Code Definitions and Solutions: Codes [5000 - 5999] 42
7-8 Error Code Definitions and Solutions: Codes [6000 - 6999] 53
7-9 Error Code Definitions and Solutions: Codes [7000 - 7999] 75

Chapter 8 Troubleshooting Based on Observed Symptoms

8-1 MA Remote Controller Problems 1
8-2 ME remote Controller Problems 5
8-3 Refrigerant Control Problems 10
8-4 Checking Transmission Waveform and for Electrical Noise Interference 15
8-5 Pressure Sensor Circuit Configuration and Troubleshooting Pressure Sensor Problems 18
8-6 Troubleshooting Solenoid Valve Problems 22
8-7 Troubleshooting Outdoor Unit Fan Problems 23
8-8 Troubleshooting LEV Problems 24
8-9 Troubleshooting Problems with Major Components on BC Controller 30
8-10 Troubleshooting Inverter Problems 44
8-11 Control Circuit 63
8-12 Measures for Refrigerant Leakage 75
8-13 Parts Replacement Instructions <Type A/Type A1> 77
8-14 BC Controller Maintenance Instructions 215
8-15 Troubleshooting Problems Using the LED Status Indicators on the Outdoor Unit 218

Chapter 9 USB Function

9-1 Service Overview 1
9-2 Operation Data Collection and Storage Functions 4
9-3 Software Rewrite Function on the USB 8
9-4 Maintenance LED Display and Troubleshooting 10

Chapter 10 LED Status Indicators on the Outdoor Unit Circuit Board

10-1 LED Status Indicators 1
10-2 LED Status Indicators Table 4

Chapter 1 Check Before Servicing

1-1 Preparation for Piping Work 1
1-1-1 Read before Servicing 1
1-1-2 Tool Preparation 2
1-2 Handling and Characteristics of Piping Materials, Refrigerant, and Refrigerant Oil 3
1-2-1 Piping Materials 3
1-2-2 Storage of Piping Materials 4
1-2-3 Pipe Processing 4
1-2-4 Differences in Refrigerant Properties 5
1-2-5 Refrigerant Oil 6
1-3 Working with Refrigerant Piping 7
1-3-1 Pipe Brazing 7
1-3-2 Air Tightness Test 8
1-3-3 Vacuum Drying 9
1-3-4 Refrigerant Charging 11
1-4 Precautions for Wiring 12
1-5 Cautionary notes on installation environment and maintenance 14
1-6 Inspection and maintenance 15
1-6-1 Guideline for preventive maintenance 15
1-6-2 Recommended parts inspection interval 16

1-1 Preparation for Piping Work

1-1-1 Read before Servicing

1. Check the type of refrigerant used in the system to be serviced.

Refrigerant Type

Multi air conditioner for building application CITY MULTI:R410A

2. Check the symptoms exhibited by the unit to be serviced.

Refer to this service handbook for symptoms relating to the refrigerant cycle.

3. Thoroughly read the safety precautions at the beginning of this manual.

4. Preparing necessary tools: Prepare a set of tools to be used exclusively with each type of refrigerant.

For information about the correct use of tools, refer to the following page(s). [1-1-2 Tool Preparation]

5. Verification of the connecting pipes: Verify the type of refrigerant used for the unit to be moved or replaced.

- Use refrigerant pipes made of phosphorus deoxidized copper. Keep the inner and outer surfaces of the pipes clean and free of such contaminants as sulfur, oxides, dust, dirt, shaving particles, oil, and water.
- These types of contaminants inside the refrigerant pipes may cause the refrigerant oil to deteriorate.

6. If there is a leak of gaseous refrigerant and the remaining refrigerant is exposed to an open flame, a poisonous gas hydrofluoric acid may form. Keep workplace well ventilated.

Note
- Install new pipes immediately after removing old ones to keep moisture out of the refrigerant circuit.
- The use of refrigerant that contains chloride, such as R22, will cause the refrigerating machine oil to deteriorate.

7. Specifications and system requirements may differ for products manufactured at different times. Refer to the relevant chapters for specification details. Production periods can be found from the serial number as follows.

8XW○○○…

- X: 1~9: Jan to Sept. / X~Z: Oct to Dec. (Production month)
- 8: 8: April 2018 to March 2019 (Production year)

ex)	8ZW	December	2018
	81W	January	2019
	82W	February	2019
	83W	March	2019
	94W	April	2019

1-1-2 Tool Preparation

Prepare the following tools and materials necessary for installing and servicing the unit.

Tools for use with R410A (Adaptability of tools that are for use with R22 or R407C)

1. To be used exclusively with R410A (not to be used if used with R22 or R407C)

Tools/Materials	Use	Notes
Gauge Manifold	Evacuation and refrigerant charging	Higher than 5.09MPa[738psi] on the high-pressure side
Charging Hose	Evacuation and refrigerant charging	The hose diameter is larger than the conventional model.
Refrigerant Recovery Cylinder	Refrigerant recovery	
Refrigerant Cylinder	Refrigerant charging	The refrigerant type is indicated. The cylinder is pink.
Charging Port on the Refrigerant Cylinder	Refrigerant charging	The charge port diameter is larger than that of the current port.
Flare Nut	Connection of the unit with the pipes	Use Type-2 Flare nuts.

2. Tools and materials that may be used with R410A with some restrictions

Tools/Materials	Use	Notes
Gas Leak Detector	Gas leak detection	The ones for use with HFC refrigerant may be used.
Vacuum Pump	Vacuum drying	May be used if a check valve adapter is attached.
Flare Tool	Flare processing	Flare processing dimensions for the piping in the system using the new refrigerant differ from those of R22. Refer to the following page(s). [1-2-1 Piping Materials]
Refrigerant Recovery Equipment	Refrigerant recovery	May be used if compatible with R410A.

3. Tools and materials that are used with R22 or R407C that may also be used with R410A

Tools/Materials	Use	Notes
Vacuum Pump with a Check Valve	Vacuum drying	
Bender	Bending pipes	
Torque Wrench	Tightening flare nuts	Only the flare processing dimensions for pipes that have a diameter of ø12.7 (1/2") and ø15.88 (5/8") have been changed.
Pipe Cutter	Cutting pipes	
Welder and Nitrogen Cylinder	Welding pipes	
Refrigerant Charging Meter	Refrigerant charging	
Vacuum Gauge	Vacuum level check	

4. Tools and materials that must not be used with R410A

Tools/Materials	Use	Notes
Charging Cylinder	Refrigerant charging	Prohibited to use
Tools containing abrasive materials	Pipe cutting, cut edge treatment	Prohibited to use

Tools for R410A must be handled with special care to keep moisture and dust from infiltrating the cycle.

1-2 Handling and Characteristics of Piping Materials, Refrigerant, and Refrigerant Oil

1-2-1 Piping Materials

Do not use the existing piping!

1. Copper pipe materials

Annealed	Soft copper pipes (annealed copper pipes). They can easily be bent with hands.
Drawn	Hard copper pipes (straight pipes). They are stronger than the Annealed at the same radial thickness.

- The distinction between Annealed and Drawn is made based on the strength of the pipes themselves.
- Annealed can easily be bent with hands.
- Drawn are considerably stronger than Annealed at the same thickness.

2. Types of copper pipes

Maximum working pressure	Refrigerant type
3.45 MPa [500psi]	R22, R407C etc.
4.30 MPa [624psi]	R410A etc.

3. Piping materials/Radial thickness

Select piping materials that meet the requirements set forth in ASTM B280.

4. Thickness and refrigerant type indicated on the piping materials

Ask the pipe manufacturer for the symbols indicated on the piping material for refrigerant R410A.

5. Flare processing

Select piping materials that meet the requirements set forth in ASTM.

6. Flare nut

Select piping materials that meet the requirements set forth in ASTM.

1-2-2 Storage of Piping Materials

1. Storage location

Store the pipes to be used indoors. (Warehouse at site or owner's warehouse)
If they are left outdoors, dust, dirt, or moisture may infiltrate and contaminate the pipe.

2. Sealing the pipe ends

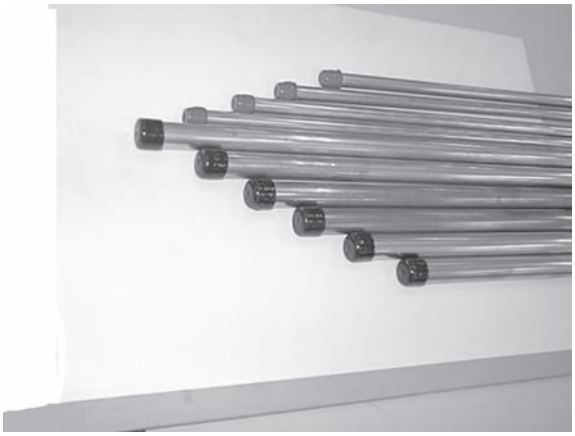

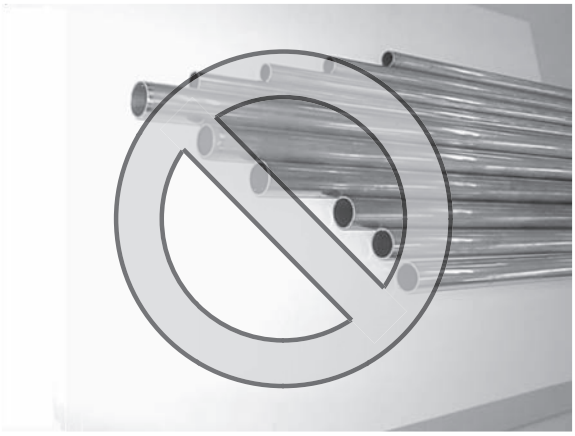

Both ends of the pipes should be sealed until just before brazing.
Keep elbow pipes and T-joints in plastic bags.

Refrigerant oil is highly hygroscopic and is likely to degrade and cause compressor failure if moisture infiltrates into the system. Storage of piping materials requires stringent management.

1-2-3 Pipe Processing

Use a small amount of ester oil, ether oil, or alkylbenzene to coat flares and flanges.
Prevent the particles that are generated during pipe cutting or cut edge treatment from entering the pipes. If abrasive materials contained in sandpaper or cutting tools enter the refrigerant circuit, they may cause the compressor, valves, or other refrigerant circuit components to fail.

Note

- Use a minimum amount of oil.
- Use only ester oil, ether oil, and alkylbenzene.
- To deburr pipes, use a reamer or other deburring tools, not sandpaper.
- To cut pipes, use a pipe cutter, not a grinder or other tools that use abrasive materials.
- When cutting or deburring pipes, do not allow cutting chips or other foreign matters to enter the pipes.
- If cutting chips or other foreign matters enter pipes, wipe them off the inside of the pipes.

1-2-4 Differences in Refrigerant Properties

1. Chemical property

As with R22, R410A is low in toxicity and chemically stable nonflammable refrigerant.
However, because the specific gravity of vapor refrigerant is greater than that of air, leaked refrigerant in a closed room will accumulate at the bottom of the room and may cause hypoxia.
If exposed to an open flame, refrigerant will generate poisonous gases. Do not perform installation or service work in a confined area.

	HFC Refrigerant		HCFC Refrigerant
	R410A	R407C	R22
	R32/R125	R32/R125/R134a	R22
Composition (wt%)	(50/50)	(23/25/52)	(100)
Type of Refrigerant	Pseudo-azeotropic Refrigerant	Non-azeotropic Refrigerant	Single Refrigerant
Chloride	Not included	Not included	Included
Safety Class	A1/A1	A1/A1	A1
Molecular Weight	72.6	86.2	86.5
Boiling Point (°C/°F)	-51.4/-60.5	-43.6/-46.4	-40.8/-41.4
Steam Pressure (25°C,MPa/77°F,psi) (gauge)	1.557/226	0.9177/133	0.94/136
Saturated Steam Density (25°C,kg/m^3/77°F,psi)	64.0	42.5	44.4
Flammability	Nonflammable	Nonflammable	Nonflammable
Ozone Depletion Coefficient (ODP)*1	0	0	0.055
Global Warming Coefficient (GWP)*2	2088	1774	1810
Refrigerant Charging Method	Refrigerant charging in the liquid state	Refrigerant charging in the liquid state	Refrigerant charging in the gaseous state
Replenishment of Refrigerant after a Refrigerant Leak	Available	Available	Available

*1 When CFC11 is used as a reference
*2 When CO_2 is used as a reference

2. Refrigerant composition

R410A is a pseudo-azeotropic HFC blend and can almost be handled the same way as a single refrigerant, such as R22. To be safe, however, draw out the refrigerant from the cylinder in the liquid phase. If the refrigerant in the gaseous phase is drawn out, the composition of the remaining refrigerant will change and become unsuitable for use.
If the refrigerant leaks out, it may be replenished.

3. Pressure characteristics

The pressure in the system using R410A is 1.6 times as great as that in the system using R22.

Temperature (°C/°F)	Pressure (gauge)		
	R410A	R407C	R22
	MPa/psi	MPa/psi	MPa/psi
-20/-4	0.30/44	0.18/26	0.14/20
0/32	0.70/102	0.47/68	0.40/58
20/68	1.34/194	0.94/136	0.81/117
40/104	2.31/335	1.44/209	1.44/209
60/140	3.73/541	2.44/354	2.33/338
65/149	4.17/605	2.75/399	2.60/377

1-2-5 Refrigerant Oil

1. Refrigerating machine oil in the HFC refrigerant system

HFC type refrigerants use a refrigerating machine oil different from that used in the R22 system.
Note that the ester oil used in the system has properties that are different from commercially available ester oil.

Refrigerant	Refrigerating machine oil
R22	Mineral oil
R407C	Ester oil
R410A	Ester oil

2. Effects of contaminants*1

Refrigerating machine oil used in the HFC system must be handled with special care to keep contaminants out.
The table below shows the effect of contaminants in the refrigerating machine oil on the refrigeration cycle.

3. The effects of contaminants in the refrigerating machine oil on the refrigeration cycle.

<table>
<tr><th colspan="2">Cause</th><th colspan="2">Symptoms</th><th>Effects on the refrigerant cycle</th></tr>
<tr><td colspan="2" rowspan="3">Water infiltration</td><td></td><td>Frozen expansion valve and capillary tubes</td><td rowspan="3">Clogged expansion valve and capillary tubes
Poor cooling performance
Compressor overheat
Motor insulation failure
Burnt motor
Coppering of the orbiting parts
Lock
Burn-in on the orbiting parts</td></tr>
<tr><td>Hydrolysis</td><td rowspan="2">Sludge formation and adhesion
Acid generation
Oxidization
Oil degradation</td></tr>
<tr><td colspan="2">Air infiltration</td><td>Oxidization</td></tr>
<tr><td rowspan="4">Infiltration of contaminants</td><td rowspan="2">Dust, dirt</td><td colspan="2">Adhesion to expansion valve and capillary tubes</td><td>Clogged expansion valve, capillary tubes, and drier
Poor cooling performance
Compressor overheat</td></tr>
<tr><td colspan="2">Infiltration of contaminants into the compressor</td><td>Burn-in on the orbiting parts</td></tr>
<tr><td rowspan="2">Mineral oil etc.</td><td colspan="2">Sludge formation and adhesion</td><td>Clogged expansion valve and capillary tubes
Poor cooling performance
Compressor overheat</td></tr>
<tr><td colspan="2">Oil degradation</td><td>Burn-in on the orbiting parts</td></tr>
</table>

*1. Contaminants is defined as moisture, air, processing oil, dust/dirt, wrong types of refrigerant, and refrigerating machine oil.

1-3 Working with Refrigerant Piping

1-3-1 Pipe Brazing

Perform brazing with special care to keep foreign objects (such as oxide scale, copper powder, water, and dust) out of the refrigerant system.

Example: Inside the brazed connection

Use of no inert gas during brazing

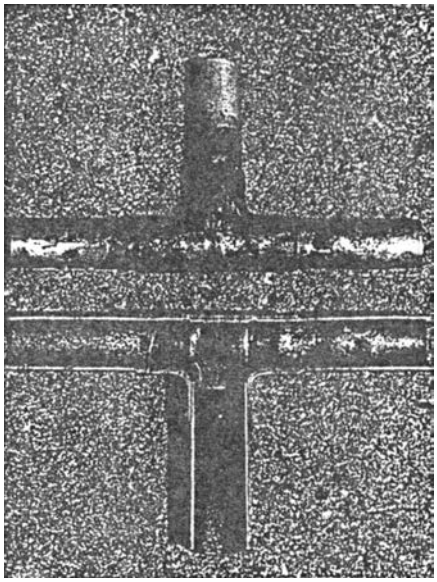

Use of inert gas during brazing

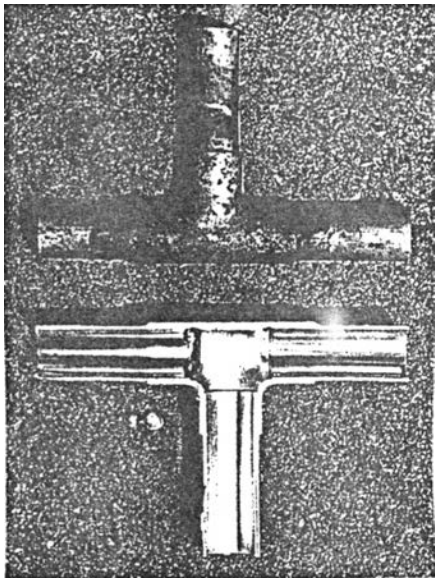

1. Items to be strictly observed

- Do not conduct refrigerant piping work outdoors if raining.
- Use inert gas during brazing.
- Use a brazing material (BCuP-3) that requires no flux when brazing between copper pipes or between a copper pipe and copper coupling.
- If installed refrigerant pipes are not immediately connected to the equipment, then braze and seal both ends.

2. Reasons

- Refrigerant oil is highly hygroscopic and is likely to cause unit failure if moisture infiltrates into the system.
- Residual flux in the refrigerant circuit will cause sludge to form.

3. Notes

Do not use commercially available antioxidants because they may cause the pipes to corrode or refrigerating machine oil to deteriorate.

1-3-2 Air Tightness Test

Note that a refrigerant leak detector for R22 will not detect an R410A leak.

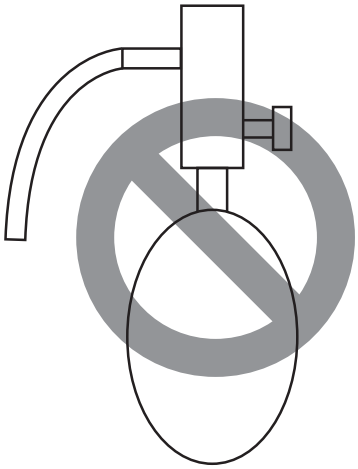

Halide torch

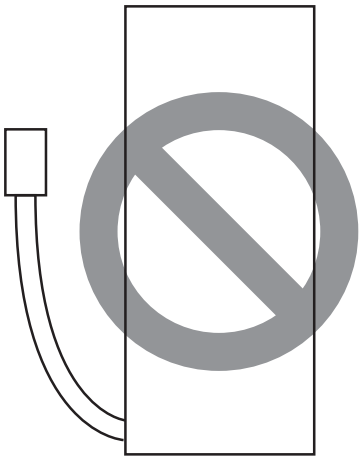

R22 leakage detector

1. Items to be strictly observed

- Pressurize the equipment with nitrogen up to the design pressure (4.15MPa[601psi]), and then judge the equipment's air tightness, taking temperature variations into account.
- Refrigerant R410A must be charged in its liquid state (vs. gaseous state).

2. Reasons

- Oxygen, if used for an air tightness test, poses a risk of explosion. (Only use nitrogen to check air tightness.)
- Refrigerant R410A must be charged in its liquid state. If gaseous refrigerant in the cylinder is drawn out first, the composition of the remaining refrigerant in the cylinder will change and become unsuitable for use.

3. Notes

Procure a leak detector that is specifically designed to detect an HFC leak. A leak detector for R22 will not detect an HFC(R410A) leak.

1-3-3 Vacuum Drying

(Photo1) 15010H

(Photo2) 14010

Recommended vacuum gauge:
ROBINAIR 14010 Thermistor Vacuum Gauge

1. Vacuum pump with a reverse-flow check valve (Photo1)

To prevent the vacuum pump oil from flowing into the refrigerant circuit during power OFF or power failure, use a vacuum pump with a reverse-flow check valve.
A reverse-flow check valve may also be added to the vacuum pump currently in use.

2. Standard of vacuum degree (Photo 2)

Use a vacuum pump that attains 0.5 Torr (65 Pa) or lower degree of vacuum after 5 minutes of operation, and connect it directly to the vacuum gauge. Use a pump well-maintained with an appropriate lubricant. A poorly maintained vacuum pump may not be able to attain the desired degree of vacuum.

3. Required precision of vacuum gauge

Use a vacuum gauge that registers a vacuum degree of 5 Torr (650 Pa) and measures at intervals of 1 Torr (130 Pa).
(A recommended vacuum gauge is shown in Photo2.)
Do not use a commonly used gauge manifold because it cannot register a vacuum degree of 5 Torr (650 Pa).

4. Evacuation time

- After the degree of vacuum has reached 5 Torr (650 Pa), evacuate for an additional 1 hour. (A thorough vacuum drying removes moisture in the pipes.) When the outside temperature drops below 1°C (or when the saturation pressure drops below 656 Pa), continue vacuum drying for another 1 hour after the vacuum degree has reached the saturated vapor pressure of the water (ice) at the outside temperature. When performing vacuum drying at a low outside temperature, use a vacuum gauge appropriate for the temperature range.

Degree of vacuum (reference)

Outdoor temp.	-20°C (-4°F)	-15°C (5°F)	-10°C (14°F)	-5°C (23°F)	0°C (32°F)
Degree of vacuum	0.77 Torr (103 Pa)	1.24 Torr (165 Pa)	1.95 Torr (260 Pa)	3.01 Torr (402 Pa)	4.58 Torr (611 Pa)

* Degrees of vacuum shown above are obtained based on the saturated vapor pressure of ice.
* In a system using water heat exchangers, circulate water to prevent the water in the heat exchangers from freezing during vacuum drying.

- Verify that the vacuum degree has not risen by more than 1 Torr (130 Pa) 1hour after evacuation. A rise by less than 1 Torr (130 Pa) is acceptable.
- If the vacuum is lost by more than 1 Torr (130 Pa), conduct evacuation, following the instructions in section 6. Special vacuum drying.

5. Procedures for stopping vacuum pump

To prevent the reverse flow of vacuum pump oil, open the relief valve on the vacuum pump side, or draw in air by loosening the charge hose, and then stop the operation.
The same procedures should be followed when stopping a vacuum pump with a reverse-flow check valve.

6. Special vacuum drying

- When 5 Torr (650 Pa) or lower degree of vacuum cannot be attained after 3 hours of evacuation, it is likely that water has penetrated the system or that there is a leak.
- If water infiltrates the system, break the vacuum with nitrogen. Pressurize the system with nitrogen gas to 0.5 kgf/cm^{2}G (0.05 MPa) and evacuate again. Repeat this cycle of pressurizing and evacuation either until the degree of vacuum below 5 Torr (650 Pa) is attained or until the pressure stops rising.
- Only use nitrogen gas for vacuum breaking. (The use of oxygen may result in an explosion.)

7. Triple Evacuation

The method below can also be used to evacuate the system.

- Evacuate the system to 4 Torr (520 Pa) from both service valves. System manifold gauges must not be used to measure vacuum. A micron gauge must be used at all times. Break the vacuum with Nitrogen (N2) into the discharge service valve to 0 Torr (0 Pa).
- Evacuate the system to 1.5 Torr (195 Pa) from the suction service valve. Break the vacuum with Nitrogen (N2) into the discharge service valve to 0 Torr (0 Pa).
- Evacuate the system to 0.5 Torr (65 Pa). System must hold the vacuum at 0.5 Torr (65 Pa) for a minimum of 1 hour.
- Conduct a rise test for a minimum of 30 minutes

8. Notes

- **To evacuate air from the entire system**
  Applying a vacuum through the check joints at the refrigerant service valve on the high and low pressure sides (BV1 and 2) is not enough to attain the desired vacuum pressure.
  Be sure to apply a vacuum through the check joints at the refrigerant service valve on the high and low pressure sides (BV1 and 2) and also through the check joints on the high and low pressure sides (CJ1 and 2).
- **To evacuate air only from the outdoor units**
  Apply a vacuum through the check joints on the high and low pressure sides (CJ1, and 2).
- **To evacuate air from the indoor units and extension pipes**
  Apply a vacuum through the check joints at the refrigerant service valve on the high and low pressure sides (BV1 and 2).

1-3-4 Refrigerant Charging

Cylinder with a siphon

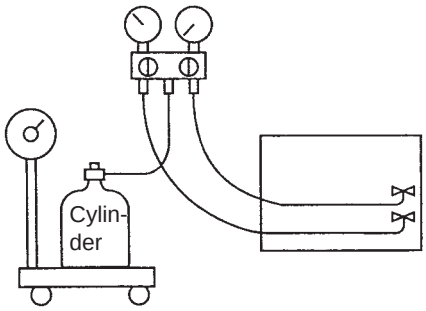

Cylinder color R410A is pink.

Cylinder without a siphon

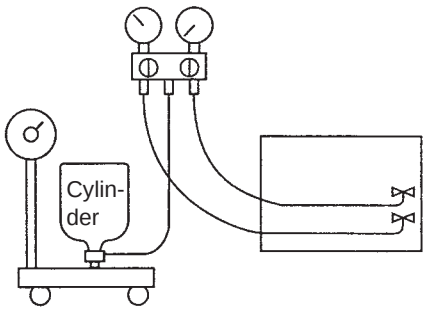

Refrigerant charging in the liquid state

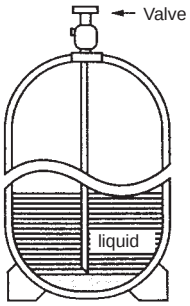

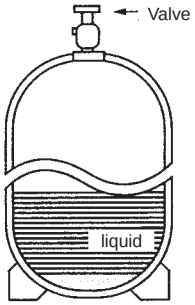

1. Reasons

R410A is a pseudo-azeotropic HFC blend (boiling point R32=-52°C[-62°F], R125=-49°C[-52°F]) and can almost be handled the same way as a single refrigerant, such as R22. To be safe, however, draw out the refrigerant from the cylinder in the liquid phase. If the refrigerant in the gaseous phase is drawn out, the composition of the remaining refrigerant will change and become unsuitable for use.

2. Notes

When using a cylinder with a siphon, refrigerant is charged in the liquid state without the need for turning it upside down. Check the type of the cylinder on the label before use.

If the refrigerant leaks out, it may be replenished. The entire refrigerant does not need to be replaced. (Charge refrigerant in the liquid state.)

Refer to the following page(s).[8-12 Measures for Refrigerant Leakage]

1-4 Precautions for Wiring

- Control boxes house high-voltage and high-temperature electrical parts.
- They may still remain energized or hot after the power is turned off.
- When opening or closing the front cover of the control box, keep out of contact with the internal parts.

  Before inspecting the inside of the control box, turn off the power, leave the unit turned off for at least 10 minutes, and check that the voltage across pins 1 and 5 of connector RYPN has dropped to 20 VDC or less.

  It will take approximately 10 minutes until the voltage is discharged after power off.
- Disconnect the relay connectors (RYFAN 1 and RYFAN 2) on the outdoor unit fan before performing maintenance work.

  On (E)P72, disconnect RYFAN1 only.

  Before connecting or disconnecting the connector, check that the outdoor unit fan is stopped and that the voltage across pins 1 and 5 of connector RYPN has dropped to 20 VDC or less.

  If the outdoor unit fan is rotated by external forces such as strong winds, the main circuit capacitor can be charged and cause an electric shock.

  Refer to the wiring nameplate for details.

  Reconnect the relay connectors (RYFAN 1 and RYFAN 2) after completion of maintenance work.
- Before turning on the power, make sure the power-supply wire is properly connected. Also, perform a voltage check at the power-supply terminal block. (Refer to item (6) in section [6-1 Read before Test Run])
- When the power is on, the compressor or heater is energized even while the compressor is stopped.
  The liquid refrigerant in the compressor will evaporate by energizing the compressor or the heater.
- Before connecting wiring to TB7, check that the voltage has dropped below 20 VDC.
- When a system controller is connected to the centralized control transmission cable to which power is supplied from the outdoor unit (power jumper on the outdoor unit is connected to CN40), be aware that power can be supplied to the centralized control transmission and the system controller may detect an error and send an error notice if the outdoor unit fan is rotated by external forces, such as strong winds, even when power to the outdoor unit is turned off.
- When replacing the internal electrical components of the control box, tighten the screws to the recommended tightening torque as specified below.

  Recommended tightening torque for the internal electrical components of the control box

Screw	Recommended tightening torque (N·m [lbf·ft])
M3	0.69 [0.51]
M4	1.47 [1.08]
M5	2.55 [1.88]
M6	2.75 [2.03]
M8	6.20 [4.57]

∗1 When replacing semiconductor modules (e.g., INV board, fan board), apply heatsink silicone evenly to the semiconductor module on the back of the circuit board. Next, tighten the screws holding the semiconductor module to one-third of the specified torque, and then tighten the screws to the specified torque.

∗2 Deviating from the recommended tightening torque may cause damage to the unit or its parts.

Take the following steps to ensure that the screws are properly tightened.

1) Ensure that the spring washers are parallel to the terminal block.

   Even if the tightening torque is observed, if the washers are not parallel to the terminal block, then the semiconductor module is not installed properly.

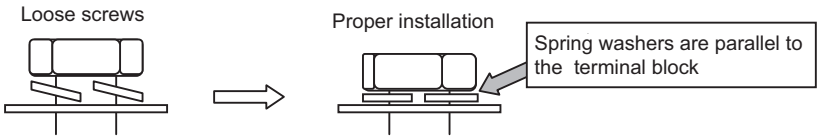

2) Check the wires are securely fastened to the screw terminals.

- **Screw the screws straight down so as not to damage the screw threads.**

  Hold the two round terminals back to back to ensure that the screw will screw down straight.

- **After tightening the screw, mark a line through the screw head, washer, and terminals with a permanent marker.**

Example

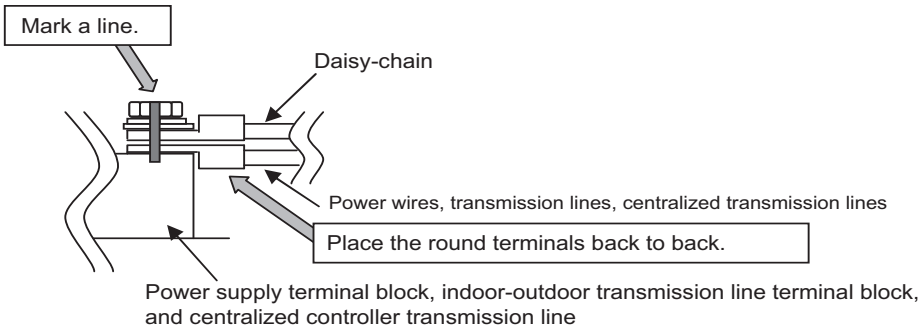

Poor contact caused by loose screws may result in overheating and fire.
Continued use of the damaged circuit board may cause overheating and fire.

1-5 Cautionary notes on installation environment and maintenance

Salt-resistant unit is resistant to salt corrosion, but not salt-proof. Please note the following when installing and maintaining outdoor units in marine atmosphere.

1) Install the salt-resistant unit out of direct exposure to sea breeze, and minimize the exposure to salt water mist.
2) Avoid installing a sun shade over the outdoor unit, so that rain will wash away salt deposits off the unit.
3) Install the unit horizontally to ensure proper water drainage from the base of the unit. Accumulation of water in the base of the outdoor unit will significantly accelerate corrosion.
4) Periodically wash salt deposits off the unit, especially when the unit is installed in a coastal area.
5) Repair all noticeable scratches after installation and during maintenance.
6) Periodically check the unit, and apply anti-rust agent and replace corroded parts as necessary.

1-6 Inspection and maintenance

1-6-1 Guideline for preventive maintenance

The following maintenance intervals indicate the estimated intervals of parts replacement and repair to be required as a result of periodic inspections. They do not necessarily mean that replacement is required at the maintenance intervals.
The maintenance intervals do not indicate the warranty period.

Unit	Parts	Inspection interval	Maintenance interval	Daily inspection	Maintenance inspection	Remarks
Outdoor unit	Compressor	1 year	20,000 hours		O	
	Fan motor				O	
	Electronic expansion valve				O	
	Valve				O	
	Heat exchanger		5 years		O	
	Sensor		20,000 hours		O	
	Electric board		25,000 hours		O	

1-6-2 Recommended parts inspection interval

Unit	Parts	Inspection interval	Inspection items	Criteria	Measures
Outdoor unit (air-cooled)	Compressor	1 year	♦Auditory check of operating sounds ♦Measurement of insulation resistance ♦Visual check for loose terminals	♦No abnormal sounds ♦Insulation resistance must be 1 MΩ or above. ♦No loose terminals	Replace the compressor if an insulation problem is found when the refrigerant is not stagnating. Retighten loose terminals.
	Fan motor (for air-cooled outdoor unit)		♦Auditory check of operating sounds ♦Measurement of insulation resistance	♦No abnormal sounds ♦Insulation resistance must be 1 MΩ or above.	Replace the fan motor if an insulation problem is found.
	Electronic expansion valve		♦Operation check using operation data	Temperature must change in proportion to the valve position. (Check the temperature variation with the centralized controller.)	Replace the valve if the operation data show an operation failure due to valve problems.
	Valve		♦Operation check using operation data	Temperature must change according to the valve position.(Check the temperature variation when the operation mode is switched between cooling and heating.)	Replace the valve if the operation data show an operation failure due to valve problems.
	Heat exchanger		♦Check for clogging, contamination, and damage	Clogging, contamination, and damage	Perform cleaning.
	Sensor		♦Check for breakage and deterioration of the cables, and for disconnection of the connectors. ♦Measurement of insulation resistance	♦No breakage or deterioration of the cables or disconnected connectors. ♦Insulation resistance must be 1 MΩ or above.	Replace the sensor if the cable is broken, short-circuited, or severely deteriorated, or an insulation problem is found.
	Electric board		♦Check the appearance.	♦No sedimentary remains	Clean with a brush if deposits are attached.
	Smoothing capacitor (Mounted on the inverter board)		♦Check the appearance of electrolytic capacitors.	♦No liquid leakage, deformation, or sleeve (outer film) shrinkage	Replace the electrolytic capacitor if there is leakage, deformation, or shrinkage of the sleeve (outer film).

♦The inspection intervals depend on the usage and environment.
The inspection intervals do not indicate the warranty period.
♦The maintenance and inspection items may differ depending on maintenance providers. Please check with your maintenance provider when concluding a maintenance contract.
♦Repairs outside the warranty period will be charged, even if periodic inspections have been performed at the recommended intervals.

Chapter 2 Restrictions

2-1 System Configurations ... 1

2-2 Types and Maximum Allowable Length of Cables ... 3

2-3 Switch Settings ... 5

2-4 M-NET Address Settings ... 6

2-4-1 Address Settings List ... 6

2-4-2 Outdoor Unit Power Jumper Connector Connection ... 7

2-4-3 Outdoor Unit Centralized Controller Switch Setting ... 7

2-4-4 Room Temperature Detection Position Selection ... 8

2-4-5 Start/Stop Control of Indoor Units ... 8

2-4-6 Miscellaneous Settings ... 8

2-4-7 Various Control Methods Using the Signal Input/Output Connector on Outdoor Unit ... 9

2-5 Demand Control Overview ... 12

2-6 System Connection Example ... 13

2-7 Example System with an MA Remote Controller ... 14

2-7-1 Single Refrigerant System (Automatic Indoor/Outdoor Address Startup) ... 14

2-7-2 Single Refrigerant System with Two or More LOSSNAY Units ... 16

2-7-3 Grouped Operation of Units in Separate Refrigerant Circuits ... 18

2-7-4 System with a Connection of System Controller to Centralized Control Transmission Line ... 20

2-7-5 System with a Connection of System Controller to Indoor-Outdoor Transmission Line ... 22

2-7-6 System with Multiple BC Controllers ... 24

2-8 Example System with an ME Remote Controller ... 27

2-8-1 System with a Connection of System Controller to Centralized Control Transmission Line ... 27

2-9 Example System with an MA and an ME Remote Controller ... 30

2-9-1 System with a Connection of System Controller to Centralized Control Transmission Line ... 30

2-10 Restrictions on Refrigerant Pipes ... 33

2-10-1 Restrictions on Refrigerant Pipe Length ... 33

2-10-2 Restrictions on Refrigerant Pipe Size ... 42

2-10-3 BC Controller Connection Method ... 43

2-10-4 Outdoor Twinning Kit ... 50

2-1 System Configurations

1. Table of compatible indoor units

The table below summarizes the types of indoor units that are compatible with different types of outdoor units.
The ones not listed are incompatible with this series of outdoor units. The PURY-P***TNU-A/A1, PURY-P***YNU-A/A1, PURY-EP***TNU-A/A1, and PURY-EP***YNU-A/A1 outdoor units cannot be used in combination across the series.

(1) Standard combinations

Outdoor units	Composing units		Maximum total capacity of connectable indoor units	Maximum number of connectable indoor units	Types of connectable indoor units
P72T/YNU-A/A1	-	-	36 - 108	18	P04 - P96 models R410A series indoor units
P96T/YNU-A/A1	-	-	48 - 144	24	
P120T/YNU-A/A1	-	-	60 - 180	30	
P144T/YNU-A/A1	-	-	72 - 216	36	
P168T/YNU-A/A1	-	-	84 - 252	42	
P192T/YSNU-A/A1	P96T/YNU-A/A1	P96T/YNU-A/A1	96 - 288	48	
P216T/YSNU-A/A1	P120T/YNU-A/A1	P96T/YNU-A/A1	108 - 324	50	
P240T/YSNU-A/A1	P120T/YNU-A/A1	P120T/YNU-A/A1	120 - 360		
P264T/YSNU-A/A1	P144T/YNU-A/A1	P120T/YNU-A/A1	132 - 396		
P288T/YSNU-A/A1	P144T/YNU-A/A1	P144T/YNU-A/A1	144 - 432		
P312T/YSNU-A/A1	P168T/YNU-A/A1	P144T/YNU-A/A1	156 - 468		
P336T/YSNU-A/A1	P168T/YNU-A/A1	P168T/YNU-A/A1	168 - 504		

(2) High COP combinations

Outdoor units	Composing units		Maximum total capacity of connectable indoor units	Maximum number of connectable indoor units	Types of connectable indoor units
EP72T/YNU-A/A1	-	-	36 - 108	18	P04 - P96 models R410A series indoor units
EP96T/YNU-A/A1	-	-	48 - 144	24	
EP120T/YNU-A/A1	-	-	60 - 180	30	
EP144T/YNU-A/A1	-	-	72 - 216	36	
EP168T/YNU-A/A1	-	-	84 - 252	42	
EP192T/YNU-A/A1	-	-	96 - 288	48	
EP192T/YSNU-A/A1	EP96T/YNU-A/A1	EP96T/YNU-A/A1	96 - 288	48	
EP216T/YNU-A/A1	-	-	108 - 324	50	
EP216T/YSNU-A/A1	EP120T/YNU-A/A1	EP96T/YNU-A/A1	108 - 324		
EP240T/YNU-A/A1	-	-	120 - 360		
EP240T/YSNU-A/A1	EP120T/YNU-A/A1	EP120T/YNU-A/A1	120 - 360		
EP264T/YSNU-A/A1	EP144T/YNU-A/A1	EP120T/YNU-A/A1	132 - 396		
EP288T/YSNU-A/A1	EP144T/YNU-A/A1	EP144T/YNU-A/A1	144 - 432		
EP312T/YSNU-A/A1	EP168T/YNU-A/A1	EP144T/YNU-A/A1	156 - 468		
EP336T/YSNU-A/A1	EP168T/YNU-A/A1	EP168T/YNU-A/A1	168 - 504		
EP384T/YSNU-A/A1	EP192T/YNU-A/A1	EP192T/YNU-A/A1	192 - 576		
EP432T/YSNU-A/A1	EP216T/YNU-A/A1	EP216T/YNU-A/A1	216 - 648		

Note

1) "Maximum total capacity of connectable indoor units" refers to the sum of the numeric values in the indoor unit model names.
2) If the total capacity of the indoor units that are connected to a given outdoor unit exceeds the capacity of the outdoor unit, the indoor units will not be able to perform at the rated capacity when they are operated simultaneously. Select a combination of units so that the total capacity of the connected indoor units is at or below the capacity of the outdoor unit whenever possible.
3) Standard units and high-COP units cannot be used in combination.
4) PURY-P-TNU-A and PURY-P-TNU-A1 outdoor units cannot be used in combination.
   PURY-EP-TNU-A and PURY-EP-TNU-A1 outdoor units cannot be used in combination.
   PURY-P-YNU-A and PURY-P-YNU-A1 outdoor units cannot be used in combination.
   PURY-EP-YNU-A and PURY-EP-YNU-A1 outdoor units cannot be used in combination.

2-2 Types and Maximum Allowable Length of Cables

1. Wiring work

(1) Notes

1) Have all electrical work performed by an authorized electrician according to the local regulations and instructions in this manual.
2) Install external transmission cables at least 5cm [1-31/32"] away from the power supply cable to avoid noise interference. (Do not put the control cable and power supply cable in the same conduit tube.)
3) Provide grounding for the outdoor unit as required.
4) Run the cable from the electric box of the indoor or outdoor unit in such way that the box is accessible for servicing.
5) Do not connect power supply wiring to the terminal block for transmission line. Doing so will damage the electronic components on the terminal block.
6) Use 2-core shielded cables as transmission cables.

   Do not use a single multiple-core cable to connect indoor units that belong to different refrigerant systems. Doing so may result in signal transmission errors and malfunctions.

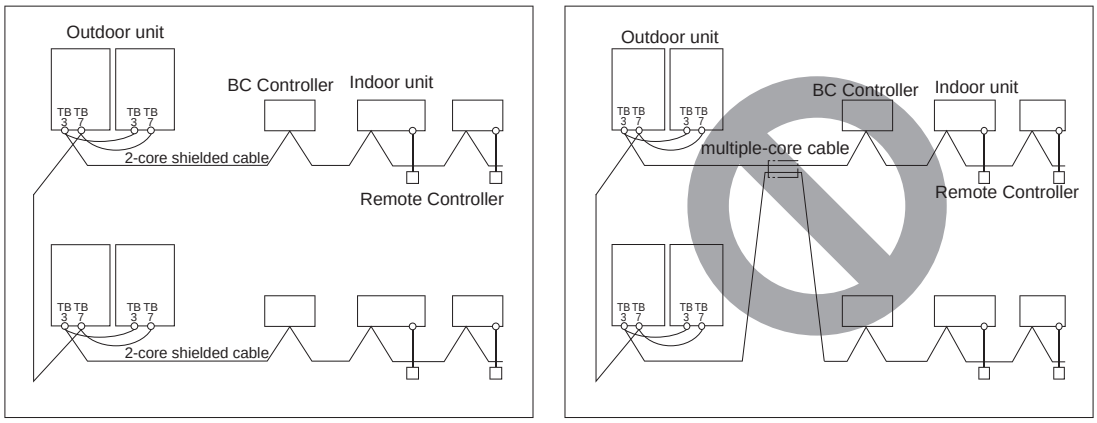

TB3: Terminal block for indoor-outdoor transmission line TB7: Terminal block for centralized control

7) When extending the transmission cable, be sure to extend the shield wire.
8) When opening and closing the front panel of the control box, do not touch the internal parts. When inspecting the inside of the control box, be sure to turn off the power of the unit at least 10 minutes beforehand and check that the voltage (across pins 1 and 5 of connector RYPN) has decreased to 20 V DC or less. (It takes about 10 minutes for the electricity to discharge after the power is turned off.)
9) The control box (inside and rear) contains high-temperature parts. Be careful even after shutting down the power.
10) Perform the service after disconnecting the relay connector in the INV box (RYFAN1 and RYFAN2). Before plugging in or unplugging connectors, check that the outdoor unit fan is not rotating and that the voltage across Pin 1 (+) and Pin 5 (-) of connector RYPN in the INV box is 20 V DC or less. The capacitor may collect a charge and cause an electric shock when the outdoor unit fan rotates in windy conditions. Refer to the wiring nameplate for details. After servicing, reconnect the relay connector (RYFAN1 and RYFAN2) in the INV box as it was.
11) When connecting wires to TB7, check that the voltage is 20 V DC or less.
12) When the power is on, the compressor or heater is energized even when the compressor is stopped. Before turning on the power, disconnect the power wires from the terminal block of the compressor and measure the insulation resistance of the compressor. Check that the compressor does not have a ground fault. If the insulation resistance is 1 MΩ or less, connect the power wires of the compressor and turn on the power of the outdoor unit. (The liquid refrigerant in the compressor will evaporate by energizing the compressor or the heater.)
13) When connecting a system controller to the TB7 side of the outdoor unit, we recommend connecting a power supply unit for transmission to the TB7 side.
    If a system controller is connected to the TB3 side, up to three units can be connected.
    A system controller can be connected to the TB7 side if the power supply switch connector is disconnected from CN41 and then connected to CN40, but power will be supplied to the TB7 side even when the power of the outdoor unit is off so the system controller may log an error and generate a warning.
14) When tightening the screws, take care that the screws are not loose or overtightened. A contact fault resulting from screw looseness may cause the generation of heat and fire. Refer to the following page(s). [1-4 Precautions for Wiring]

(2) Control wiring

Different types of control wiring are used for different systems. Before performing wiring work, refer to the following page(s).
[2-7 Example System with an MA Remote Controller]
[2-8 Example System with an ME Remote Controller]
[2-9 Example System with an MA and an ME Remote Controller]

Types and maximum allowable length of cables

Control lines are categorized into 2 types: transmission line and remote controller line.

Use the appropriate type of cables and observe the maximum allowable length specified for a given system. If a given system has a long transmission line or if a noise source is located near the unit, place the unit away from the noise source to reduce noise interference.

1) M-NET transmission line

Type	2-core shielded cable CVVS, CPEVS, or MVVS
Size	1.25 mm^2 [AWG 16], or ø1.2 mm or above
Length	Max. 200 m [656 ft]
Remarks	The maximum allowable length of transmission cables via outdoor units (both centralized control transmission cables and indoor-outdoor transmission cables) is 500 m [1640 ft]*1. The maximum allowable length of transmission cables from the power supply unit to each outdoor unit or to the system controller is 200 m [656 ft].

* Do not use a single multiple-core cable to connect indoor units that belong to different refrigerant systems. The use of a multiple-core cable may result in signal transmission errors and malfunctions.
* Ensure shield continuity when extending the transmission cable.
*1 When extending the length of the transmission cables to 1000 m [3280 ft], consult your dealer.

2) Remote controller wiring

	MA remote controller	ME remote controller
Type	2-core cable VCTF, VCTFK, CVV, VVR, VVF, or VCT	2-core shielded cable CVVS, CPEVS, or MVVS
Size	0.3 to 1.25 mm^2 [AWG 22 to 16] *1 *3	0.3 to 1.25 mm^2 [AWG 22 to 16] *1 *4
Length	Max. 200 m [656 ft] *2	The section of the cable that exceeds 10 m [32 ft] must be included in the maximum indoor-outdoor transmission line distance.

*1 The use of cables that are smaller than 0.75 mm^2 [AWG 18] is recommended for easy handling.
*2 Max. 70 m [229 ft] for PAR-CT01MA series
*3 To wire PAR-CT01MA series, PAR-4"x"MA series, PAR-3"x"MA series ("x" represents 0 or later), or Simple MA remote controller, use a cable with a size of 0.3 mm^2 [AWG 22].
*4 When connected to the terminal block on the Simple remote controller, use a cable with a size of 0.75 to 1.25 mm^2 [AWG18 to 16].

2-3 Switch Settings

1. Switch setting

The necessary switch settings depend on system configuration. Before performing wiring work, refer to the following page(s).
[2-7 Example System with an MA Remote Controller]
[2-8 Example System with an ME Remote Controller]
[2-9 Example System with an MA and an ME Remote Controller]
If the switch settings are changed while the unit is being powered, those changes will not take effect, and the unit will not function properly.

Units on which to set the switches		Symbol	Units to which the power must be shut off
CITY MULTI indoor unit	Main/sub unit	IC	Outdoor units *3 and Indoor units
LOSSNAY, OA processing unit *1		LC	Outdoor units *3 and LOSSNAY
ATW	Booster Unit	BU	Outdoor units and Booster Unit
	Water Hex Unit	AU	Outdoor units and Water Hex Unit
ME remote controller	Main/sub remote controller	RC	Outdoor units *3
MA remote controller	Main/sub remote controller	MA	Indoor units
CITY MULTI outdoor unit*2		OC,OS	Outdoor units *3
BC controller	Main	BC	Outdoor units *3 and BC controller
	Sub1 - 11	BS1 - 11	Outdoor units *3 *4 and BC controller

*1. Applicable when LOSSNAY units are connected to the indoor-outdoor transmission line.
*2. The outdoor units in the same refrigerant circuit are automatically designated as OC and OS in the order of capacity from large to small (if two or more units have the same capacity, in the order of address from small to large).
*3. Turn off the power to all the outdoor units in the same refrigerant circuit.
*4. When setting the switch SW4 of the control board, set it with the outdoor unit power on. Refer to the following page(s).
[5-1-1 Outdoor Unit Switch Functions and Factory Settings]

2-4 M-NET Address Settings

2-4-1 Address Settings List

1. M-NET Address settings

(1) Address settings table

The need for address settings and the range of address setting depend on the configuration of the system.

Unit or controller		Symbol	Address setting range	Setting method	Factory address setting
CITY MULTI indoor unit	Main/sub unit	IC	0, 01 to 50 *1 *4 *6 *7	♦Assign the smallest address to the main indoor unit in the group, and assign sequential address numbers to the rest of the indoor units in the same group. ♦In an R2 system with a sub BC controller, make the settings for the indoor units in the following order. (i) Indoor unit to be connected to the main BC controller (ii) Indoor unit to be connected to sub BC controller 1 (iii) Indoor unit to be connected to sub BC controller 2 Make the settings for the indoor units in the way that the formula "(i) < (ii) < (iii)" is true.	00
M-NET adapter					
M-NET control interface					
Free Plan adapter					
LOSSNAY, OA processing unit		LC	0, 01 to 50 *1 *4 *6 *7	Assign an arbitrary but unique address to each of these units after assigning an address to all indoor units.	00
ATW	Booster Unit	BU			
	Water Hex Unit	AU			
ME remote controller	Main remote controller	RC	101 to 150	Add 100 to the smallest address of all the indoor units in the same group.	101
	Sub remote controller	RC	151 to 200 *3	Add 150 to the smallest address of all the indoor units in the same group.	
MA remote controller		MA	No address settings required. (The main/sub setting must be made if 2 remote controllers are connected to the system.) *8		Main
CITY MULTI outdoor unit		OC OS	0, 51 to 100 *1 *2 *6 *7	♦Assign an address that equals the lowest address of the indoor units in the same refrigerant circuit plus 50. ♦Assign sequential addresses to the outdoor units in the same refrigerant circuit. The outdoor units in the same refrigerant circuit are automatically designated as OC and OS. *5	00
Auxiliary outdoor unit	BC controller (main)	BC	0, 51 to 100 *1 *2 *6	♦Assign an address that equals the address of the outdoor unit in the same refrigerant system plus 1. ♦If a given address overlaps any of the addresses that are assigned to the outdoor units or to the sub BC controller, use a different, unused address within the setting range.	00
	BC controller (sub)	BS1 BS2 BS3 . . BS11	51 to 100 *2	♦Assign an address to both the sub BC controller that equals the lowest address of the indoor units that are connected to each of them plus 50. ♦If a sub BC controller is connected, the automatic startup function is not available.	

*1. If a given address overlaps any of the addresses that are assigned to other units, use a different, unused address within the setting range.
*2. To set the outdoor unit address or the auxiliary outdoor unit address to "100," set the rotary switches to "50."
*3. To set the ME remote controller address to "200," set the rotary switches to "00."
*4. Some models of indoor units have two or three control boards.
Assign an address to the No.1, No. 2, and No. 3 control boards so that the No. 2 control board address equals the No. 1 control board address plus 1, and that the No. 3 control board address equals the No. 1 control board address plus 2.
*5. The outdoor units in the same refrigerant circuit are automatically designated as OC, and OS. They are designated as OC, and OS in the descending order of capacity (ascending order of address if the capacities are the same).
*6. No address settings are required for units in a system with a single outdoor unit (with some exceptions).
Address setting is required if a sub BC controller is connected.
*7. If a given address overlaps any of the addresses that are assigned to other units, use a different, unused address within the setting range.

Unit or controller		Symbol	Address setting range	Setting method	Factory address setting
System controller	Group remote controller	GR SC	201 to 250	Assign an address that equals the sum of the smallest group number of the group to be controlled and 200.	201
	System remote controller	SR SC		Assign an arbitrary but unique address within the range listed on the left to each unit.	
	ON/OFF remote con troller	AN SC		Assign an address that equals the sum of the smallest group number of the group to be controlled and 200.	
	Schedule timer (compatible with M-NET)	ST SC		Assign an arbitrary but unique address within the range listed on the left to each unit.	202
	Central controller AE-200 AG-150A GB-50ADA G(B)-50A	TR SC	0, 201 to 250	Assign an arbitrary but unique address within the range listed on the left to each unit. The address must be set to "0" to control the K-control unit.	000
	LM adapter	SC	201 to 250	Assign an arbitrary but unique address within the range listed on the left to each unit.	247

2-4-2 Outdoor Unit Power Jumper Connector Connection

There are limitations on the total number of units that are connectable to each refrigerant system. Refer to the DATABOOK for details.

System configuration	Connection to the system controller	Power supply unit for transmission lines	Group operation of units in a system with multiple outdoor units	Power supply switch connector connection
System with one outdoor unit	_	_	_	CN41 (Factory setting)
System with multiple outdoor units	Not connected	_	Not grouped	
		Not required	Grouped	Disconnect the male connector from the female power supply switch connector (CN41) and connect it to the female power supply switch connector (CN40) on only one of the outdoor units.*2 *Connect the S (shielded) terminal on the terminal block (TB7) on the outdoor unit whose CN41 was replaced with CN40 to the ground terminal (⏚) on the electric box.
	With connection to the indoor unit system	Not required	Grouped/not grouped	
	With connection to the centralized control system	Not required*1 (Powered from the outdoor unit)	Grouped/not grouped	
		Required *1	Grouped/not grouped	CN41 (Factory setting)

*1 The need for a power supply unit for transmission lines depends on the system configuration. Some controllers, such as GB-50ADA, have a function to supply power to the transmission lines.
*2 The replacement of the power jumper connector from CN41 to CN40 must be performed on only one outdoor unit in the system.

2-4-3 Outdoor Unit Centralized Controller Switch Setting

System configuration	Centralized control switch (SW5-1) settings *1
Connection to the system controller Not connected	OFF (Factory setting)
Connection to the system controller Connected *2	ON

*1 Set SW5-1 on all outdoor units in the same refrigerant circuit to the same setting.
*2 When only the LM adapter is connected, leave SW5-1 to OFF (as it is).

2-4-4 Room Temperature Detection Position Selection

To stop the fan during heating Thermo-OFF (SW1-7 and 1-8 on the indoor units to be set to ON), use the built-in thermistor on the remote controller or an optional thermistor.

1) To use the built-in sensor on the remote controller, set the SW1-1 to ON.
(Factory setting: SW1-1 set to "OFF".)

- Some models of remote controllers are not equipped with a built-in temperature sensor.
Use the built-in temperature sensor on the indoor unit instead.
- When using the built-in sensor on the remote controller, install the remote controller where room temperature can be detected.
(Note) Factory setting for SW1-1 on the indoor unit of the All-Fresh Models is ON.

2) When an optional temperature sensor is used, set SW1-1 to OFF, and set SW3-8 to ON.

- When using an optional temperature sensor, install it where room temperature can be detected.

2-4-5 Start/Stop Control of Indoor Units

Each indoor unit (or group of indoor units) can be controlled individually by setting SW 1-9 and 1-10.

Function	Operation of the indoor unit when the operation is resumed after the unit was stopped	Setting (SW1)*4 *5	
		9	10
Power ON/OFF by the plug*1,*2,*3	Indoor unit will go into operation regardless of its operation status before power off (power failure). (In approx. 5 minutes)	OFF	ON
Automatic restoration after power failure	Indoor unit will go into operation if it was in operation when the power was turned off (or cut off due to power failure). (In approx. 5 minutes)	ON	OFF
	Indoor unit will remain stopped regardless of its operation status before power off (power failure).	OFF	OFF

*1. Do not shut off power to the outdoor units. Doing so will cut off the power supply to the compressors and the heater on the outdoor units and may result in compressor malfunction when operation is restored after a power failure.
*2. Not applicable to units with a built-in drain pump and humidifier.
*3. Models with a built-in drain pump cannot be turned on/off by the plug individually. All the units in the same refrigerant circuits will be turned on or off by the plug.
*4. Requires that the dipswitch settings for all the units in the group be made.
*5. To control the external input to and output from the air conditioners with the PLC software for general equipment via the AE-200, set SW1-9 and SW1-10 to ON. With these settings made, the power start-stop function becomes disabled. To use the auto recovery function after power failure while these settings are made, set SW1-5 to ON.

2-4-6 Miscellaneous Settings

Cooling-only setting for the indoor unit: Cooling only model (Factory setting: SW3-1 "OFF.")
When using indoor unit as a cooling-only unit, set SW3-1 to ON.

2-4-7 Various Control Methods Using the Signal Input/Output Connector on Outdoor Unit

(1) Various connection options

Type	Usage	Function	Terminal to be used*1	Option
Input	Prohibiting cooling/heating operation (thermo OFF) by an external input to the outdoor unit. *It can be used as the DEMAND control device for each system.	DEMAND (level)	CN3D*2	Adapter for external input (PAC-SC36NA-E)
	Performs a low level noise operation of the outdoor unit by an external input to the outdoor unit. * It can be used as the silent operation device for each refrigerant system.	Low-noise mode (level) *3*4		
	Forces the outdoor unit to perform a fan operation by receiving signals from the snow sensor.*5*7	Snow sensor signal input (level)	CN3S	
	Cooling/heating operation can be changed by an external input to the outdoor unit.	Auto-changeover	CN3N	
	The operation mode of the unit can be changed from normal cooling operation (performance priority) to energy-saving cooling mode by an external signal input. The unit will automatically slide the evaporating temperature depending on the ΔT °C. (Control activate: ΔT is 1°C or lower.)	Energy-saving mode*9 (Shifts evaporating temp. depending on the load)	CN3K	
Output	How to extract signals from the outdoor unit *It can be used as an operation status display device. *It can be used for an interlock operation with external devices.	Operation status of the compressor*5	CN51	Adapter for external output (PAC-SC37SA-E)
		Error status*6*8		

*1 For details, refer to section (2) Example of wiring connection.

*2 For details, refer to section (2) Example of wiring connection and other relevant sections in the manual. [2-5 Demand Control Overview]

*3 Low-noise mode is valid when Dip SW6-8 on the outdoor unit is set to OFF. When DIP SW6-8 is set to ON, 4 levels of on-DEMAND are possible, using different configurations of low-noise mode input and DEMAND input settings.When 2 or more outdoor units exist in one refrigerant circuit system, 8 levels of on-DEMAND are possible.

*4 By setting Dip SW6-7, the Low-noise mode can be switched between the Capacity priority mode and the Low-noise priority mode.
When SW6-7 is set to ON: The low-noise mode always remains effective.
When SW6-7 is set to OFF: The low noise mode is cancelled when certain outside temperature or pressure criteria are met, and the unit goes into normal operation (capacity priority mode).

Low-noise mod is effective.		Capacity priority mode becomes effective.	
Cooling	Heating	Cooling	Heating
TH7<30°C[86°F] and 63HS1<3.13 MPa[454 psi]	TH7>3°C[37°F] and 63LS>0.45 MPa[65 psi]	TH7>35°C[95°F] or 63HS1>3.43 MPa[497 psi]	TH7<0°C[32°F] or 63LS<0.38 MPa[55 psi]

*5 If multiple outdoor units are connected to the same refrigerant circuit, signal input/output settings need to be made for each outdoor unit.

*6 Take out signals from the outdoor unit that is designated as OC if multiple outdoor units in the same system.

*7 If the formula TH7>5 holds true, the fan will not go into operation when the contact receives signal input.

*8 When using a base heater, change the setting using SW4. When using a base heater, error output will not be available.

*9 This control can be enabled also from the system controller. For the procedure, refer to the manual of the system controller.

(2) Example of wiring connection

⚠ CAUTION

1) Wiring should be covered by insulation tube with supplementary insulation.
2) Use relays or switches with IEC or equivalent standard.
3) The electric strength between accessible parts and control circuit should have 2750V or more.

(1) CN51

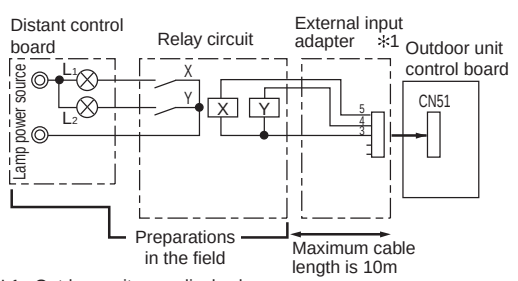

L1 : Outdoor unit error display lamp⁎3
L2 : Compressor operation lamp (compressor running state)
X, Y : Relay (coil =<0.9W : DC12V)
⁎1. Optional part : PAC-SC37SA-E or field supply.
⁎3. When using a base heater, error output will not be available.

(2) CN3S

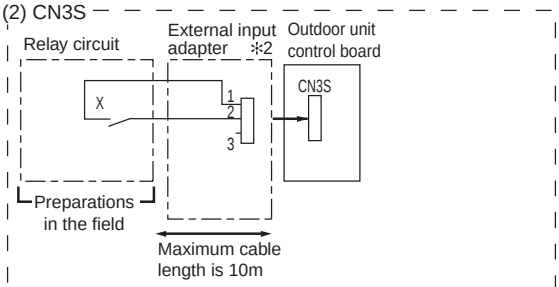

X : Relay Contact rating voltage >= DC15V
Contact rating current >= 0.1A
Minimum applicable load =< 1mA at DC
Snow sensor : The outdoor fan runs when X is closed in stop mode or thermostat mode.
⁎2. Optional part : PAC-SC36NA-E or field supply.

(3) CN3N

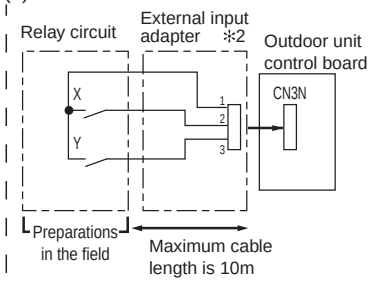

		X	
		OFF	ON
Y	OFF	Normal	
	ON	Cooling	Heating

X : Cooling / Heating
Y : Validity / Invalidity of X
X,Y : Relay Contact rating voltage >= DC15V
Contact rating current >= 0.1A
Minimum applicable load =< 1mA at DC
⁎2. Optional part : PAC-SC36NA-E or field supply.

(4) CN3D

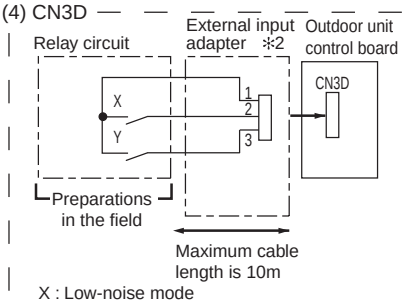

X : Low-noise mode
Y : Compressor ON/OFF
X,Y : Relay Contact rating voltage >= DC15V
Contact rating current >= 0.1A
Minimum applicable load =< 1mA at DC
⁎2. Optional part : PAC-SC36NA-E or field supply.

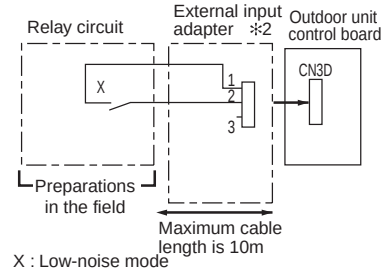

X : Low-noise mode
X : Relay Contact rating voltage >= DC15V
Contact rating current >= 0.1A
Minimum applicable load =< 1mA at DC
⁎2. Optional part : PAC-SC36NA-E or field supply.
Low-noise mode : The noise level is reduced by controlling the maximum fan frequency and maximum compressor frequency.

(5) CN3K

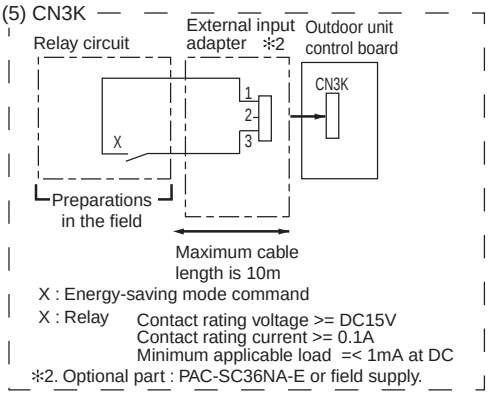
Relay circuit
External input adapter ※2
Outdoor unit control board
CN3K
1
2
3
X
Preparations in the field
Maximum cable length is 10m
X : Energy-saving mode command
X : Relay
Contact rating voltage >= DC15V
Contact rating current >= 0.1A
Minimum applicable load =< 1mA at DC
※2. Optional part : PAC-SC36NA-E or field supply.

2-5 Demand Control Overview

(1) General outline of control

Demand control is performed by using the external signal input to the 1-2 and 1-3 pins of CN3D on the outdoor units (OC and OS). Between 2 and 8 steps of demand control is possible by setting Dip SW6-8 on the outdoor units (OC and OS).

No	Demand control switch	Dip SW6-8		Input to CN3D*2
		OC	OS	
1	2 steps (0-100%)	OFF	OFF	OC
2	4 steps (0-50-75-100%)	ON	OFF	OC
3		OFF	ON	OS
4	8 steps (0-25-38-50-63-75-88-100%)	ON	ON	OC and OS

*1 Available demand functions
P72 - P168T/YNU-A/A1, EP72 - EP240T/YNU-A/A1 models (single-outdoor-unit system) : 2 and 4 steps shown in the rows 1 and 2 in the table above only.
P192 - P336T/YNU-A/A1, EP192 - EP432T/YNU-A/A1 models (two-outdoor-unit system OC+OS) : 2-8 steps shown in the rows 1, 2, 3, and 4 in the table above only.
*2 Signal is input to CN3D on the outdoor unit whose SW6-8 is set to ON. When SW6-8 is set to OFF on all outdoor units, the signal is input to the CN3D on the OC.
Outdoor units whose SW6-8 is set to ON are selectable in a single refrigerant system.
*3 If wrong sequence of steps are taken, the units may go into the Thermo-OFF (compressor stop) mode.
Ex) When switching from 100% to 50%
(Incorrect) 100%→0%→50% The units may go into the Thermo-OFF mode.
(Correct) 100%→75%→50%
*4 The percentage of the demand listed in the table above is an approximate value based on the compressor volume and does not necessarily correspond with the actual capacity.
*5 Notes on using demand control in combination with the low-noise mode
To enable the low-noise mode, it is necessary to short-circuit 1-2 pin of CN3D on the outdoor unit whose SW6-8 is set to OFF. When SW6-8 is set to ON on all outdoor units, the following operations cannot be performed.
♦Performing 4-step demand in combination with the low-noise operation in a single-outdoor-unit system.
♦Performing 8-step demand in combination with the low-noise operation in a two-outdoor-unit system.

1) Contact input and control content

2-step demand control

The same control as the Thermo-OFF is performed by closing 1-3 pin of CN3D.

CN3D	
1-3	
Open	100%
Close	0%

4-step demand control (When SW6-8 is set to ON on an outdoor unit)

Demand capacity is shown below.

CN3D	1-2P	
1-3P	Open	Close
Open	100%	75%
Close	0%	50%

8-step demand control (When SW6-8 is set to ON on two outdoor units)

Demand capacity is shown below.

8-step demand		No.2 CN3D				
		1-2P	Open		Close	
No.1 CN3D	1-2P	1-3P	Open	Close	Open	Close
	Open	Open	100%	50%	88%	75%
		Close	50%	0%	38%	25%
	Close	Open	88%	38%	75%	63%
		Close	75%	25%	63%	50%

*1. The outdoor units whose SW6-8 is set to ON are designated as No. 1 and No. 2 in the order of address from small to large.
Ex) When outdoor units whose SW6-8 is set to ON are designated as OC and OS, OC=No. 1 and OS=No. 2.

2-6 System Connection Example

Examples of typical system connection are shown below.
Refer to the Installation Manual that came with each device or controller for details.

(1) An example of a system to which an MA remote controller is connected

	System configuration	Connection to the system controller	Address start up for indoor and outdoor units	Notes
1	Single refrigerant system	NO	Automatic address setup	
2	Single refrigerant system	NO	Manual address setup	Connection of multiple LOSSNAY units
3	Grouping of units in different refrigerant systems	NO	Manual address setup	
4	Single refrigerant system	With connection to transmission line for centralized control	Manual address setup	
5	Single refrigerant system	With connection to indoor-outdoor transmission line	Manual address setup	
6	Single refrigerant system	With connection to transmission line for centralized control	Manual address setup	Connection of multiple LOSSNAY units

(2) An example of a system to which an ME remote controller is connected

	System configuration	Connection to the system controller	Address start up for indoor and outdoor units	Notes
1	Single refrigerant system	With connection to transmission line for centralized control	Manual address setup	

(3) An example of a system to which both MA remote controller and ME remote controller are connected

	System configuration	Connection to the system controller	Address start up for indoor and outdoor units	Notes
1	Single refrigerant system	With connection to transmission line for centralized control	Manual address setup	

*MA remote controller and ME remote controller cannot both be connected to the same group.

2-7 Example System with an MA Remote Controller

2-7-1 Single Refrigerant System (Automatic Indoor/Outdoor Address Startup)

(1) Sample control wiring

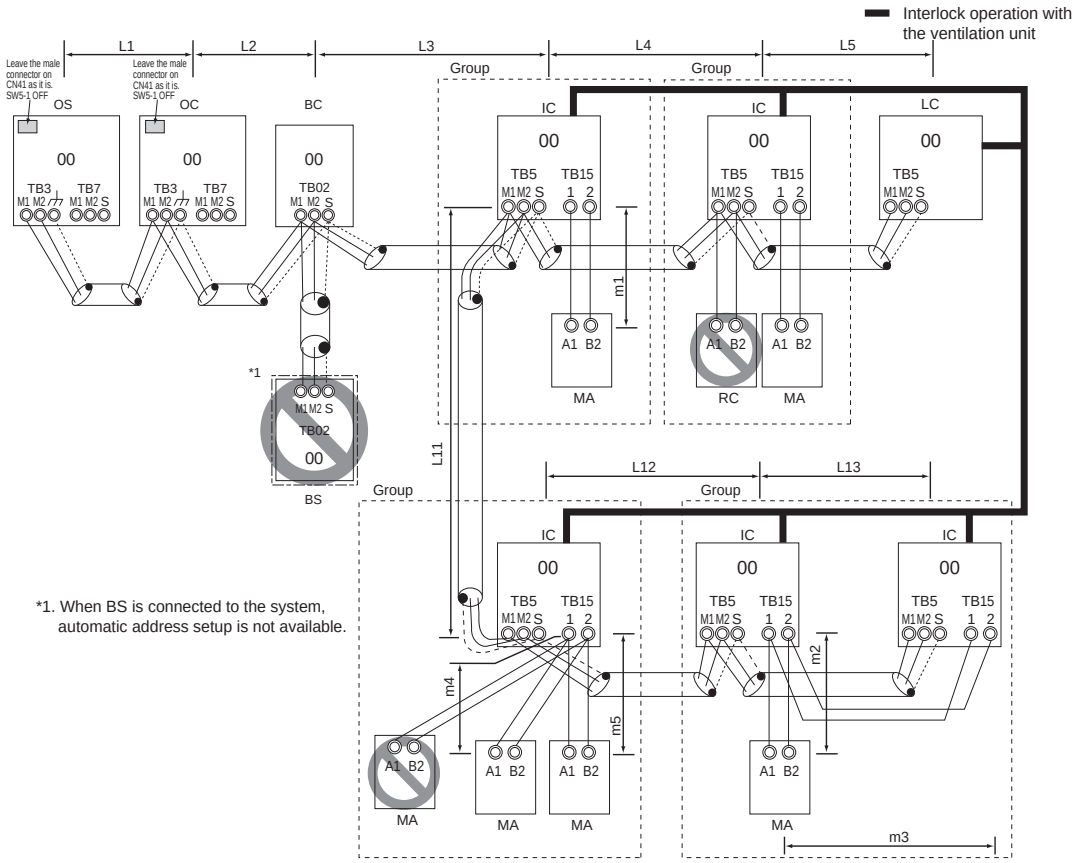

*1. When BS is connected to the system, automatic address setup is not available.

(2) Cautions

1) ME remote controller and MA remote controller cannot both be connected to the same group of indoor units.
2) No more than 2 MA remote controllers can be connected to a group of indoor units.
   When the PAR-CT01MA series, PAR-4"x"MA series, or PAR-3"x"MA series ("x" represents 0 or later) is connected to a group, no other MA remote controllers can be connected to the same group.
3) When the number of the connected indoor units is as shown in the table below, one or more transmission boosters (sold separately) are required.
   To connect two transmission boosters, connect them in parallel. (Observe the maximum number of connectable indoor units that are listed in the specifications for each outdoor unit.)

	Number of transmission booster (sold separately) required	
	1 unit	2 units
When the P72 and P96 models are not included in the connected indoor units	27 - 50 units	-
When the P72 and P96 models are included in the connected indoor units	21 - 39 units	40 - 50 units

♦The table above shows the number of transmission boosters that is required by the system with three BC controllers. For each BC controller added or subtracted, subtract or add two indoor units.

4) Automatic address setup is not available if start-stop input (CN32, CN51, CN41) is used for a group operation of indoor units or when multiple indoor units with different functions are grouped in the same group. Refer to the following page(s). [2-7-2 Single Refrigerant System with Two or More LOSSNAY Units]
5) For information about connecting two or more LOSSNAY units to a system, refer to the following page(s). [2-7-2 Single Refrigerant System with Two or More LOSSNAY Units]

(3) Maximum allowable length

1) Indoor/outdoor transmission line
   Maximum distance (1.25mm^2 [AWG16] or larger)
   L1 +L2+L3+L4+L5≦200m[656ft]
   L1 +L2+L3+L11+L12+L13≦200m[656ft]
   *If the power-supply distance exceeds the distance limit of 200 meters, a transmission booster (PAC-SF46EPA-G) is required.
2) Transmission line for centralized control
   No connection is required.
3) MA remote controller wiring
   Maximum overall line length
   (0.3 to 1.25mm^2 [AWG22 to 16])
   m1≦200m [656ft]
   m2+m3≦200m [656ft]
   m4+m5≦200m [656ft] *1
   *1 Max. 70 m [229 ft] for PAR-CT01MA series
   *When connecting PAR-CT01MA, PAR-4“x”MA, PAR-3“x”MA (“x” represents 0 or later), use sheathed cables with a minimum thickness of 0.3 mm^2.

(4) Wiring method

1) Indoor/outdoor transmission line
   Daisy-chain terminals M1 and M2 of the terminal block for indoor-outdoor transmission line (TB3) on the outdoor units (OC and OS), of the terminal block for indoor-outdoor transmission line (TB02) on the main BC controller (BC), and of the terminal block for indoor-outdoor transmission line (TB5) on each indoor unit (IC). (Non-polarized two-wire)
   - Only use shielded cables.

Note

The outdoor units in the same refrigerant circuit are automatically designated as OC and OS in the order of capacity from large to small (if two or more units have the same capacity, in the order of address from small to large).

Shielded cable connection

Daisy-chain the ground terminal (⏚) on the outdoor units (OC and OS), the S terminal of the terminal block (TB02) on the BC controller (BC), and the S terminal of the terminal block (TB5) on the indoor unit (IC) with the shield of the shielded cable.

2) Transmission line for centralized control
   No connection is required.
3) MA remote controller wiring
   Connect terminals 1 and 2 on the terminal block for MA remote controller line (TB15) on the indoor unit (IC) to the terminal block on the MA remote controller (MA). (Non-polarized two-wire)

   When 2 remote controllers are connected to the system

   When 2 remote controllers are connected to the system, connect terminals 1 and 2 of the terminal block (TB15) on the indoor unit (IC) to the terminal block on the two MA remote controllers.
   - Set one of the MA remote controllers as a sub controller. (Refer to the Instruction Manual for the MA remote controller for the setting method.)

   Group operation of indoor units

   To perform a group operation of indoor units (IC), daisy-chain terminals 1 and 2 on the terminal block (TB15) on all indoor units (IC) in the same group, and then connect terminals 1 and 2 on the terminal block (TB15) on the indoor unit on one end to the terminal block on the MA remotecontroller. (Non-polarized two-wire)
   - When performing a group operation of indoor units that have different functions, "Automatic indoor/outdoor addresssetup" is not available.
4) LOSSNAY connection
   Connect terminals M1 and M2 on the terminal block(TB5) on the indoor unit (IC) to the appropriate terminals on the terminal block (TB5) on LOSSNAY (LC). (Non-polarized two-wire)
   - Interlock operation setting with all the indoor units in the same system will automatically be made. (It is required that the Lossnay unit be turned on before the outdoorunit.)
   - For information about certain types of systems (1. Systems in which the LOSSNAY unit is interlocked with only part of the indoor units, 2. Systems in which the LOSSNAY unit is operated independently from the indoor units, 3. Systems in which more than 16 indoor units are interlocked with the LOSSNAY unit, and 4. Systems to which two ore more LOSSNAY units are connected), refer to the following page(s). [2-7-2 Single Refrigerant System with Two or More LOSSNAY Units]
5) Switch setting
6) When replacing the control board on only some of the outdoor units, delete all connection information. (Refer to [5-1-1 Outdoor Unit Switch Functions and Factory Settings] for information on switch functions.)

(5) Address setting method

Procedures	Unit or controller			Address setting range	Setting method	Notes	Factory setting
1	Indoor unit	Main unit	IC	No settings required.	-	Port number setting is required For information about how to perform a group operation of indoor units that feature different functions, refer to the following page(s). [2-7-2 Single Refrigerant System with Two or More LOSSNAY Units]	00
		Sub unit	IC				
2	LOSSNAY		LC	No settings required.	-		00
3	MA remote controller	Main remote controller	MA	No settings required.	-		Main
		Sub remote controller	MA	Sub remote controller	Settings to be made with the Sub/Main switch		
4	Outdoor unit		OC OS	No settings required.	-		00
5	Auxiliary outdoor unit	BC controller	BC	No settings required.	-		00

Note

The outdoor units in the same refrigerant circuit are automatically designated as OC and OS.
They are designated as OC and OS in the descending order of capacity (ascending order of address if the capacities are the same).

2-7-2 Single Refrigerant System with Two or More LOSSNAY Units

(1) Sample control wiring

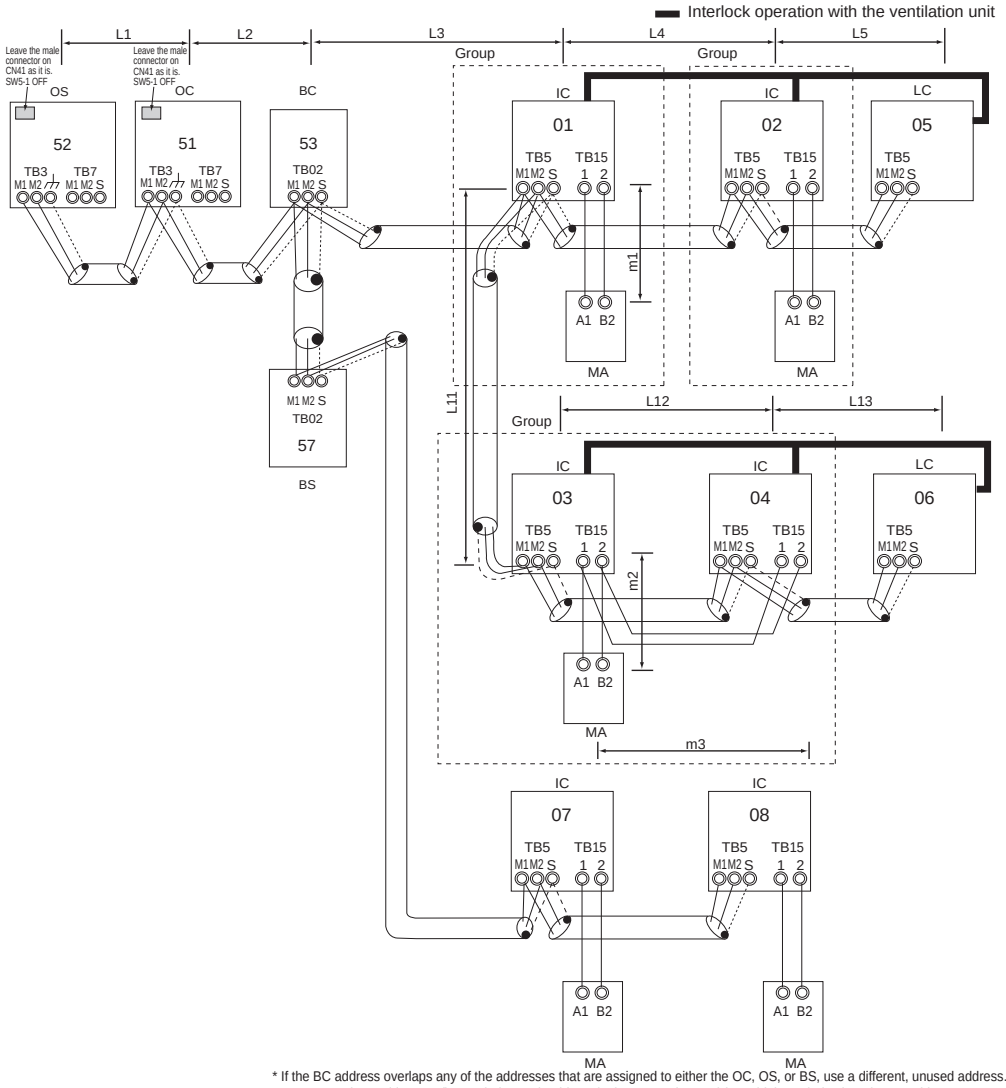

* If the BC address overlaps any of the addresses that are assigned to either the OC, OS, or BS, use a different, unused address.
OC, OS, and BS addresses (lowest indoor unit address in the group plus +50) have higher priority than the BS address.

(2) Cautions

1) ME remote controller and MA remote controller cannot both be connected to the same group of indoor units.
2) No more than 2 MA remote controllers can be connected to a group of indoor units.
   When the PAR-CT01MA series, PAR-4"x"MA series, or PAR-3"x"MA series ("x" represents 0 or later) is connected to a group, no other MA remote controllers can be connected to the same group.
3) When the number of the connected indoor units is as shown in the table below, one or more transmission boosters (sold separately) are required.
   To connect two transmission boosters, connect them in parallel.
   (Observe the maximum number of connectable indoor units that are listed in the specifications for each outdoor unit.)

	Number of transmission booster (sold separately) required	
	1 unit	2 units
When the P72 and P96 models are not included in the connected indoor units	27 - 50 units	-
When the P72 and P96 models are included in the connected indoor units	21 - 39 units	40 - 50 units

- The table above shows the number of transmission boosters that is required by the system with three BC controllers. For each BC controller added or subtracted, subtract or add two indoor units.
- Refer to the DATABOOK for further information about how many booster units are required for a given system.

(3) Maximum allowable length

1) Indoor/outdoor transmission line
   Same as 2-7-1
2) Transmission line for centralized control
   No connection is required.
3) MA remote controller wiring
   Same as 2-7-1

(4) Wiring method

1) Indoor/outdoor transmission line

Daisy-chain terminals M1 and M2 of the terminal block for indoor-outdoor transmission line (TB3) on the outdoor units (OC and OS), of the terminal block for indoor-outdoor transmission line (TB02) on the main and sub BC controllers (BC and BS), and of the terminal block for indoor-outdoor transmission line (TB5) on each indoor unit (IC). (Non-polarized two-wire)

- Only use shielded cables.

Note

The outdoor units in the same refrigerant circuit are automatically designated as OC and OS in the order of capacity from large to small (if two or more units have the same capacity, in the order of address from small to large).

Shielded cable connection

Daisy-chain the ground terminal (⏚) on the outdoor units (OC and OS), the S terminal of the terminal block (TB02) on BC and BS, and the S terminal of the terminal block (TB5) on the indoor unit (IC) with the shield of the shielded cable.

2) Transmission line for centralized control

No connection is required.

3) MA remote controller wiring

Same as 2-7-1

When 2 remote controllers are connected to the system

Same as 2-7-1

Group operation of indoor units

Same as 2-7-1

4) LOSSNAY connection

Connect terminals M1 and M2 on the terminal block (TB5) on the indoor unit (IC) to the appropriate terminals on the terminal block (TB5) on LOSSNAY (LC). (Non-polarized two-wire)

- Interlock setting between the indoor units and LOSSNAY units must be entered on the remote controller. For information about how to interlock the operation of indoor and LOSSNAY units.

5) Switch setting

Address setting is required as follows.

(5) Address setting method

Procedures	Unit or controller			Address setting range	Setting method	Notes	Factory setting
1	Indoor unit	Main unit	IC	01 to 50	• Assign the smallest address to the main unit in the group. • In a system with a sub BC controller, make the settings for the indoor units in the following order. (i) Indoor unit to be connected to the main BC controller (ii) Indoor unit to be connected to sub BC controller 1 (iii) Indoor unit to be connected to sub BC controller 2 Make the settings for the indoor units in the way that the formula "(i) < (ii) < (iii)" is true. When using additional BC controllers (3 to 11 BC controllers), make the same settings.	• Port number setting is required • To perform a group operation of indoor units that feature different functions, designate the indoor unit in the group with the greatest number of functions as the main unit.	00
		Sub unit			Assign sequential numbers starting with the address of the main unit in the same group +1. (Main unit address +1, main unit address +2, main unit address +3, etc.)		
2	LOSSNAY		LC	01 to 50	Assign an arbitrary but unique address to each of these units after assigning an address to all indoor units.	None of these addresses may overlap any of the indoor unit addresses.	00
3	MA remote controller	Main remote controller	MA	No settings required.	-		Main
		Sub remote controller	MA	Sub remote controller	Settings to be made with the Sub/Main switch		
4	Outdoor unit		OC OS	51 to 100	• Assign sequential address to the outdoor units in the same refrigerant circuit. • The outdoor units are automatically designated as OC and OS.(Note)	• To set the address to 100, set the rotary switches to 50. • If the addresses that is assigned to the main BC controller overlaps any of the addresses that are assigned to the outdoor units or to the sub BC controller, use a different, unused address within the setting range. • The use of a sub BC controller requires the connection of a main BC controller.	00
5	Auxiliary outdoor unit	BC controller (Main)	BC	51 to 100	OC (or OS if it exists) +1		
		BC controller (Sub)	BS		Assign an address that equals the sum of the smallest address of the indoor units that are connected to the sub BC controller and 50.		

Note

The outdoor units in the same refrigerant circuit are automatically designated as OC and OS.
They are designated as OC and OS in the descending order of capacity (ascending order of address if the capacities are the same).

2-7-3 Grouped Operation of Units in Separate Refrigerant Circuits

(1) Sample control wiring

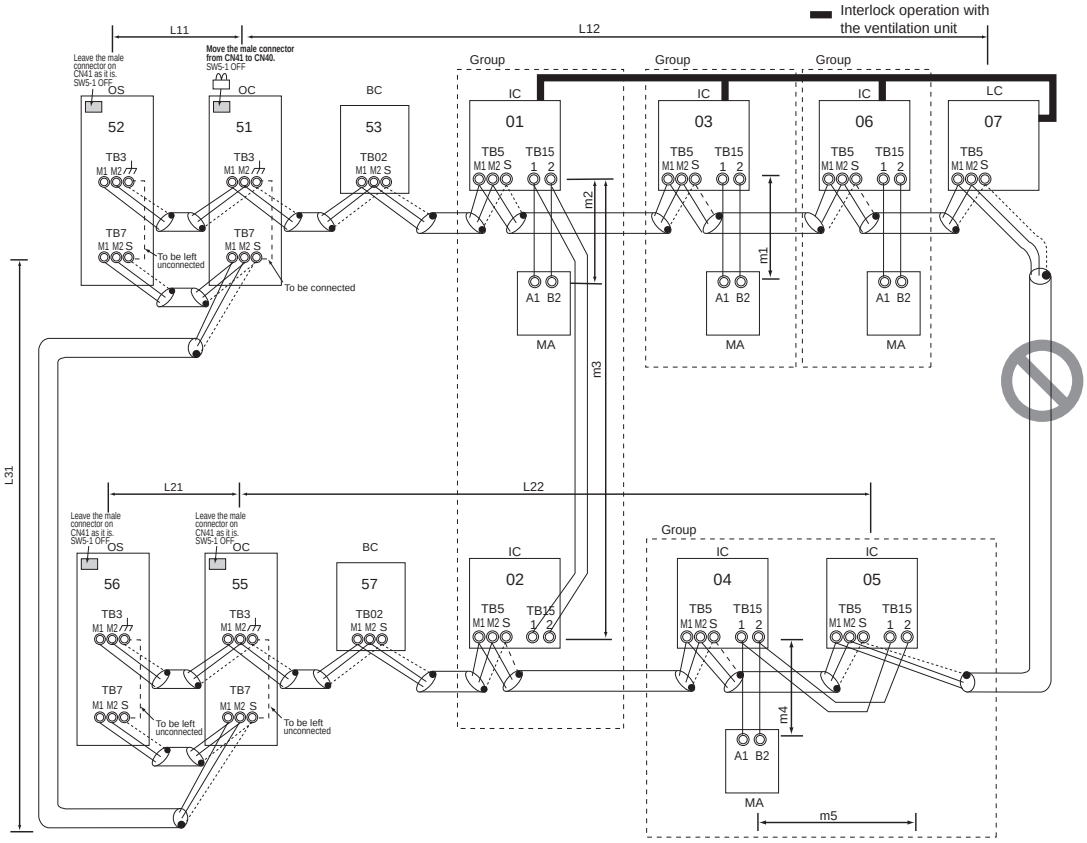

(2) Cautions

1) ME remote controller and MA remote controller cannot both be connected to the same group of indoor units.
2) No more than 2 MA remote controllers can be connected to a group of indoor units.
   When the PAR-CT01MA series, PAR-4"x"MA series, or PAR-3"x"MA series ("x" represents 0 or later) is connected to a group, no other MA remote controllers can be connected to the same group.
3) Do not connect the terminal blocks (TB5) on the indoor units that are connected to different outdoor units with each other.
4) Replacement of male power jumper connector (CN41) must be performed only on one of the outdoor units.
5) Provide grounding to S terminal on the terminal block for transmission line for centralized control (TB7) on only one of the outdoor units.
6) When the number of the connected indoor units is as shown in the table below, one or more transmission boosters (sold separately) are required.
   To connect two transmission boosters, connect them in parallel.
   (Observe the maximum number of connectable indoor units that are listed in the specifications for each outdoor unit.)

	Number of transmission booster (sold separately) required	
	1 unit	2 units
When the P72 and P96 models are not included in the connected indoor units	27 - 50 units	-
When the P72 and P96 models are included in the connected indoor units	21 - 39 units	40 - 50 units

♦The table above shows the number of transmission boosters that is required by the system with three BC controllers. For each BC controller added or subtracted, subtract or add two indoor units.

♦Refer to the DATABOOK for further information about how many booster units are required for a given system.

(3) Maximum allowable length

1) Indoor/outdoor transmission line

   Maximum distance (1.25mm^2 [AWG16] or larger)
   L11+L12 ≦ 200m [656ft]
   L21+L22 ≦ 200m [656ft]
2) Transmission line for centralized control

   L31+L21 ≦ 200m [656ft]
3) MA remote controller wiring

   Same as 2-7-1
4) Maximum line distance via outdoor unit
   (1.25mm^2 [AWG16] or larger)

   L12(L11)+L31+L22(L21) ≦ 500 m [1640 ft] (1000 m [3280 ft]) *1

   *1 When the wiring length exceeds 500 m [1640 ft], consult the sales office.

(4) Wiring method

1) Indoor/outdoor transmission line

Same as 2-7-2

Shielded cable connection

Same as 2-7-2

2) Transmission line for centralized control

Daisy-chain terminals M1 and M2 on the terminal block for transmission line for centralized control (TB7) on the outdoor units (OC) in different refrigerant circuits and on the OC and OS (Note a) in the same refrigerant circuit.
If a power supply unit is not connected to the transmission line for centralized control, replace the power jumper connector on the control board from CN41 to CN40 on only one of the outdoor units.

Note

a) The outdoor units in the same refrigerant circuit are automatically designated as OC and OS in the order of capacity from large to small (if two or more units have the same capacity, in the order of address from small to large).
b) If TB7's on the outdoor units in the same refrigerant circuit are not daisy-chained, connect the transmission line for the central control system to TB7 of the OC. (Note a).To maintain the central control even during an OC failure or a power failure, connect TB7 on OC and OS together. (If there is a problem with the outdoor unit whose power jumper was moved from CN41 to CN40, central control is not possible, even if TB7's are daisy-chained.)
c) When connecting TB7, only commence after checking that the voltage is below 20 VDC.

- Only use shielded cables.

Shielded cable connection

Daisy-chain the S terminal on the terminal block (TB7) on the outdoor units (OC, OS) with the shield wire of the shielded cable. Short-circuit the earth terminal (⏚) and the S terminal on the terminal block (TB7) on the outdoor unit whose power jumper connector is mated with CN40.

3) MA remote controller wiring

Same as 2-7-1

When 2 remote controllers are connected to the system

Same as 2-7-1

Group operation of indoor units

Same as 2-7-1

4) LOSSNAY connection

Same as 2-7-2

5) Switch setting

Address setting is required as follows.

(5) Address setting method

Procedures	Unit or controller			Address setting range	Setting method	Notes	Factory setting
1	Indoor unit	Main unit	IC	01 to 50	• Assign the smallest address to the main unit in the group. • In a system with a sub BC controller, make the settings for the indoor units in the following order. (i) Indoor unit to be connected to the main BC controller (ii) Indoor unit to be connected to sub BC controller 1 (iii) Indoor unit to be connected to sub BC controller 2 Make the settings for the indoor units in the way that the formula "(i) < (ii) < (iii)" is true. When using additional BC controllers (3 to 11 BC controllers), make the same settings.	• Port number setting is required • To perform a group operation of indoor units that feature different functions, designate the indoor unit in the group with the greatest number of functions as the main unit.	00
		Sub unit			Assign sequential numbers starting with the address of the main unit in the same group +1. (Main unit address +1, main unit address +2, main unit address +3, etc.)		
2	LOSSNAY		LC	01 to 50	Assign an arbitrary but unique address to each of these units after assigning an address to all indoor units.	None of these addresses may overlap any of the indoor unit addresses.	00
3	MA remote controller	Main remote controller	MA	No settings required.	-		Main
		Sub remote controller	MA	Sub remote controller	Settings to be made with the Sub/Main switch		
4	Outdoor unit		OC OS	51 to 100	• Assign sequential address to the outdoor units in the same refrigerant circuit. • The outdoor units are automatically designated as OC and OS.(Note)	• To set the address to 100, set the rotary switches to 50. • If the addresses that is assigned to the main BC controller overlaps any of the addresses that are assigned to the outdoor units or to the sub BC controller, use a different, unused address within the setting range. • The use of a sub BC controller requires the connection of a main BC controller.	00
5	Auxiliary outdoor unit	BC controller (Main)	BC	51 to 100	OC (or OS if it exists) +1		
		BC controller (Sub)	BS		Assign an address that equals the sum of the smallest address of the indoor units that are connected to the sub BC controller and 50.		

Note

The outdoor units in the same refrigerant circuit are automatically designated as OC and OS.
They are designated as OC and OS in the descending order of capacity (ascending order of address if the capacities are the same).

2-7-4 System with a Connection of System Controller to Centralized Control Transmission Line

(1) Sample control wiring

An example of a system in which a system controller is connected to the transmission cable for the centralized control system and the power is supplied from the outdoor unit

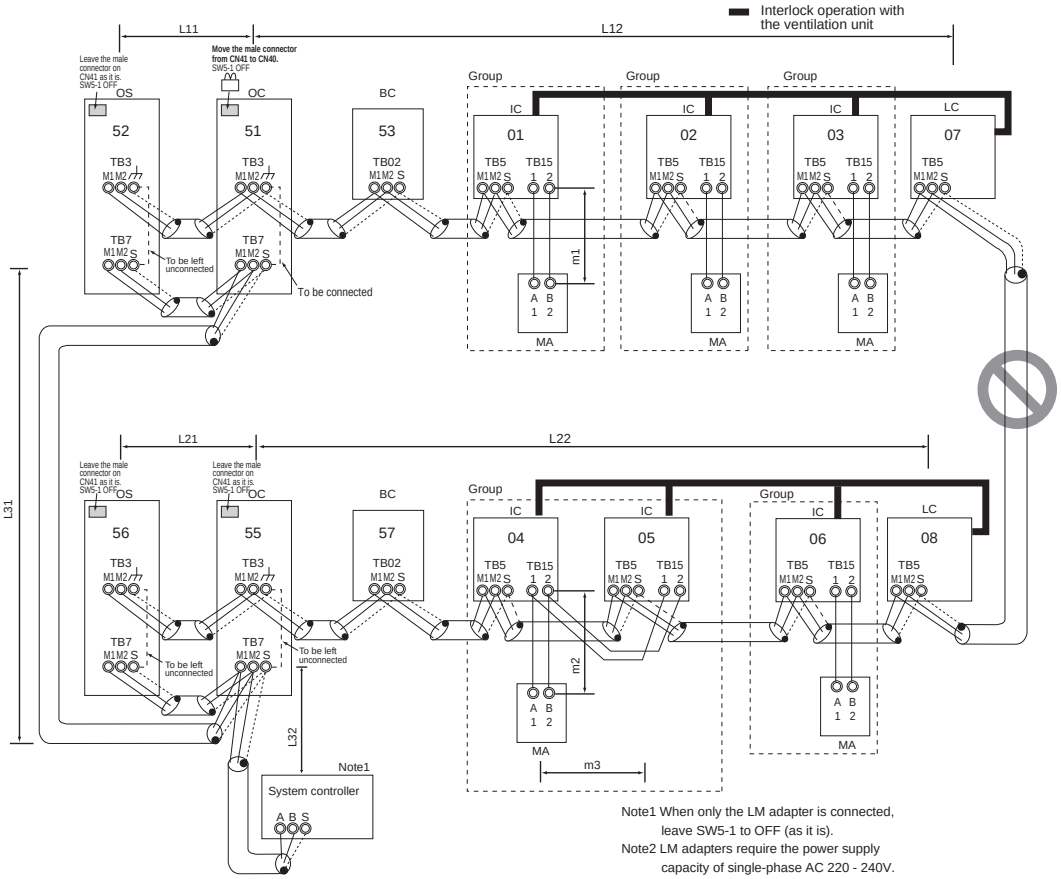

Note1 When only the LM adapter is connected, leave SW5-1 to OFF (as it is).
Note2 LM adapters require the power supply capacity of single-phase AC 220 - 240V.

(2) Cautions

1) ME remote controller and MA remote controller cannot both be connected to the same group of indoor units.
2) No more than 2 MA remote controllers can be connected to a group of indoor units.
   When the PAR-CT01MA series, PAR-4"x"MA series, or PAR-3"x"MA series ("x" represents 0 or later) is connected to a group, no other MA remote controllers can be connected to the same group.
3) Do not connect the terminal blocks (TB5) on the indoor units that are connected to different outdoor units with each other.
4) Replacement of male power jumper connector (CN41) must be performed only on one of the outdoor units (not required if power to the transmission line for centralized control is supplied from a controller with a power supply function, such as GB-50ADA).
5) Short-circuit the shield terminal (S terminal) and the earth terminal (⏚) on the terminal block for transmission line for centralized control (TB7) on the outdoor unit whose power jumper connector is mated with CN40.
6) When the number of the connected indoor units is as shown in the table below, one or more transmission boosters (sold separately) are required. To connect two transmission boosters, connect them in parallel. (Observe the maximum number of connectable indoor units that are listed in the specifications for each outdoor unit.)

	Number of transmission booster (sold separately) required	
	1 unit	2 units
When the P72 and P96 models are not included in the connected indoor units	27 - 50 units	-
When the P72 and P96 models are included in the connected indoor units	21 - 39 units	40 - 50 units

♦The left table shows the number of transmission boosters that is required by the system with three BC controllers. For each BC controller added or subtracted, subtract or add two indoor units.

♦Refer to the DATABOOK for further information about how many booster units are required for a given system.

7) When a power supply unit is connected to the transmission line for centralized control, leave the power jumper connector on CN41 as it is (factory setting).

(3) Maximum allowable length

1) Indoor/outdoor transmission line
   Same as 2-7-3
2) Transmission line for centralized control
   L31+L32(L21) ≦ 200m [656ft]
3) MA remote controller wiring
   Same as 2-7-1
4) Maximum line distance via outdoor unit
   (1.25mm^2 [AWG16] or larger)
   L32+L31+L12(L11) ≦ 500 m [1640 ft] (1000 m [3280 ft]) *1
   L32+L22(L21) ≦ 500 m [1640 ft] (1000 m [3280 ft]) *1
   L12(L11)+L31+L22(L21) ≦ 500 m [1640 ft] (1000 m [3280 ft]) *1
   *1 When the wiring length exceeds 500 m [1640 ft], consult the sales office.

(4) Wiring method

1) Indoor/outdoor transmission line
   Same as 2-7-2
   Only use shielded cables.
   Shielded cable connection
   Same as 2-7-2
2) Transmission line for centralized control
   Daisy-chain terminals A and B on the system controller, terminals M1 and M2 on the terminal block for transmission line for centralized control (TB7) on the outdoor units (OC) in different refrigerant circuits and on the outdoor units (OC and OS) in the same refrigerant circuit. (Note b)
   If a power supply unit is not connected to the transmission line for centralized control, replace the power jumper connector on the control board from CN41 to CN40 on only one of the outdoor units.
   If a system controller is connected, set the central control switch (SW5-1) on the control board of all outdoor units to "ON."

Note

a) The outdoor units in the same refrigerant circuit are automatically designated as OC and OS in the order of capacity from large to small (if two or more units have the same capacity, in the order of address from small to large).
b) If TB7's on the outdoor units in the same refrigerant circuit are not daisy-chained, connect the transmission line for the central control system to TB7 of the OC. (Note a).To maintain the central control even during an OC failure or a power failure, connect TB7 on OC and OS together. (If there is a problem with the outdoor unit whose power jumper was moved from CN41 to CN40, central control is not possible, even if TB7's are daisy-chained.)
c) When connecting TB7, only commence after checking that the voltage is below 20 VDC.

- Only use shielded cables.

Shielded cable connection

Daisy-chain the S terminal of the terminal block (TB7) on the system controller, OC, and OS with the shield of the shielded cable. Short-circuit the earth terminal (⏚) and the S terminal on the terminal block (TB7) on the outdoor unit whose power jumper connector is mated with CN40.

3) MA remote controller wiring
   Same as 2-7-1
   When 2 remote controllers are connected to the system
   Same as 2-7-1
   Group operation of indoor units
   Same as 2-7-1
4) LOSSNAY connection
   Connect terminals M1 and M2 on the terminal block (TB5) on the indoor unit (IC) to the appropriate terminals on the terminal block for indoor-outdoor transmission line (TB5) on LOSSNAY (LC). (Non-polarized two-wire)
   - Indoor units must be interlocked with the LOSSNAY unit using the system controller. (Refer to the operation manual for the system controller for the setting method.) Interlock setting from the remote controller is required if the ON/OFF remote controller alone or the LM adapter alone is connected.
5) Switch setting
   Address setting is required as follows.

(5) Address setting method

Procedures	Unit or controller			Address setting range	Setting method	Notes	Factory setting
1	Indoor unit	Main unit	IC	01 to 50	•Assign the smallest address to the main unit in the group. •In a system with a sub BC controller, make the settings for the indoor units in the following order. (i) Indoor unit to be connected to the main BC controller (ii) Indoor unit to be connected to sub BC controller 1 (iii) Indoor unit to be connected to sub BC controller 2 Make the settings for the indoor units in the way that the formula "(i) < (ii) < (iii)" is true. When using additional BC controllers (3 to 11 BC controllers), make the same settings.	•Port number setting is required •To perform a group operation of indoor units that feature different functions, designate the indoor unit in the group with the greatest number of functions as the main unit.	00
		Sub unit			Assign sequential numbers starting with the address of the main unit in the same group +1. (Main unit address +1, main unit address +2, main unit address +3, etc.)		
2	LOSSNAY		LC	01 to 50	Assign an arbitrary but unique address to each of these units after assigning an address to all indoor units.	None of these addresses may overlap any of the indoor unit addresses.	00
3	MA remote controller	Main remote controller	MA	No settings required.	-	Make the same indoor unit group settings with the system controller as the ones that were made with the MA remote controller.	Main
		Sub remote controller	MA	Sub remote controller	Settings to be made with the Sub/ Main switch		
4	Outdoor unit (Note)		OC OS	51 to 100	•Assign sequential address to the outdoor units in the same refrigerant circuit. •The outdoor units are automatically designated as OC and OS.(Note)	•To set the address to 100, set the rotary switches to 50. •If the addresses that is assigned to the main BC controller overlaps any of the addresses that are assigned to the outdoor units or to the sub BC controller, use a different, unused address within the setting range. •The use of a sub BC controller requires the connection of a main BC controller.	00
5	Auxiliary outdoor unit	BC controller (Main)	BC	51 to 100	OC (or OS if it exists) +1		
		BC controller (Sub)	BS		Assign an address that equals the sum of the smallest address of the indoor units that are connected to the sub BC controller and 50.		

Note

The outdoor units in the same refrigerant circuit are automatically designated as OC and OS.
They are designated as OC and OS in the descending order of capacity (ascending order of address if the capacities are the same).

2-7-5 System with a Connection of System Controller to Indoor-Outdoor Transmission Line

(1) Sample control wiring

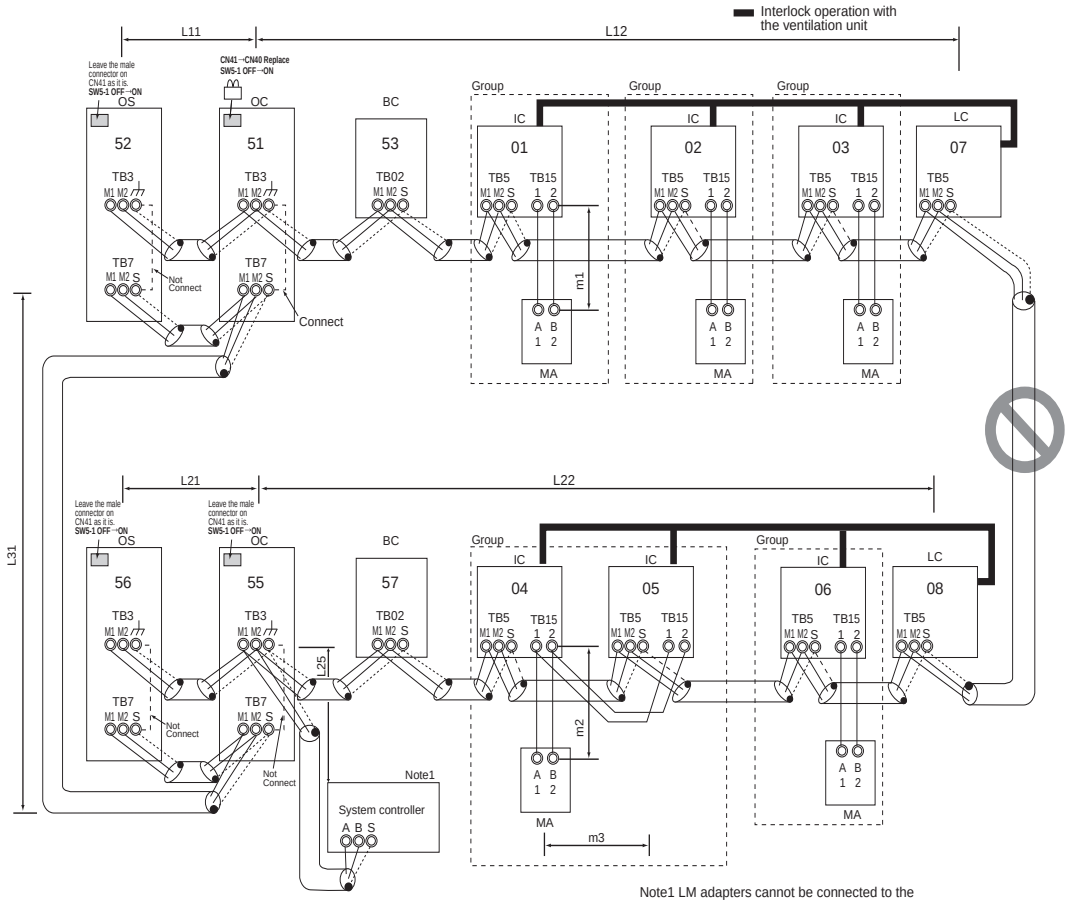

Note1 LM adapters cannot be connected to the indoor-outdoor transmission line.

(2) Cautions

1) ME remote controller and MA remote controller cannot both be connected to the same group of indoor units.
2) No more than 2 MA remote controllers can be connected to a group of indoor units.
   When the PAR-CT01MA series, PAR-4"x"MA series, or PAR-3"x"MA series ("x" represents 0 or later) is connected to a group, no other MA remote controllers can be connected to the same group.
3) Do not connect the terminal blocks (TB5) on the indoor units that are connected to different outdoor units with each other.
4) Replacement of male power jumper connector (CN41) must be performed only on one of the outdoor units.
5) Provide grounding to S terminal on the terminal block for transmission line for centralized control (TB7) on only one of the outdoor units.
6) A maximum of three system controllers can be connected to the indoor-outdoor transmission line. (AE-200, AE-50, EW-50, AG-150A, GB-50ADA, or G(B)-50A are not connectable.)
7) When the total number of indoor units exceeds 20 (12 if one or more indoor units of the 72 model or above is connected), it may not be possible to connect a system controller to the indoor-outdoor transmission line.
8) When the number of the connected indoor units is as shown in the table below, one or more transmission boosters (sold separately) are required. To connect two transmission boosters, connect them in parallel. (Observe the maximum number of connectable indoor units that are listed in the specifications for each outdoor unit.)

	Number of transmission booster (sold separately) required	
	1 unit	2 units
When the P72 and P96 models are not included in the connected indoor units	27 - 50 units	-
When the P72 and P96 models are included in the connected indoor units	21 - 39 units	40 - 50 units

- The table above shows the number of transmission boosters that is required by the system with three BC controllers. For each BC controller added or subtracted, subtract or add two indoor units.
- Refer to the DATABOOK for further information about how many booster units are required for a given system.

(3) Maximum allowable length

1) Indoor/outdoor transmission line

   Maximum distance (1.25mm^2 [AWG16] or larger)
   L11+L12≦200m [656ft]
   L21+L22≦200m [656ft]
   L25≦200m [656ft]
2) Transmission line for centralized control

   L31+L21≦200m [656ft]
3) MA remote controller wiring

   Same as 2-7-1
4) Maximum line distance via outdoor unit
   (1.25mm^2 [AWG16] or larger)

   L25+L31+L12(L11)≦500 m [1640 ft] (1000 m [3280 ft]) *1
   L12(L11)+L31+L22(L21)≦500 m [1640 ft] (1000 m [3280 ft]) *1

   *1 When the wiring length exceeds 500 m [1640 ft], consult the sales office.

(4) Wiring method

1) Indoor/outdoor transmission line

Daisy-chain terminals M1 and M2 of the terminal block for indoor-outdoor transmission line (TB3) on the outdoor units (OC and OS) (Note a), of the terminal block for indoor-outdoor transmission line (TB02) on the main and sub BC controllers (BC and BS), of the terminal block for indoor-outdoor transmission line (TB5) on each indoor unit (IC), and the S terminal of the system controller.(Non-polarized two-wire)

- Only use shielded cables.

Note

a) The outdoor units in the same refrigerant circuit are automatically designated as OC and OS in the order of capacity from large to small (if two or more units have the same capacity, in the order of address from small to large).

Shielded cable connection

Daisy-chain the ground terminal (⏚) on the outdoor units (OC and OS), the S terminal of the terminal block (TB02) on the BC and BS, and the S terminal of the terminal block (TB5) on the indoor unit (IC) with the shield of the shielded cable.

2) Transmission line for centralized control

Daisy-chain terminals M1 and M2 on the terminal block for transmission line for centralized control (TB7) on the outdoor units (OC) in different refrigerant circuits and on the OC and OS in the same refrigerant circuit. (Note b)
If a power supply unit is not connected to the transmission line for centralized control, replace the power jumper connector on the control board from CN41 to CN40 on only one of the outdoor units.
Set the central control switch (SW5-1) on the control board of all outdoor units to "ON."

Note

b) If TB7's on the outdoor units in the same refrigerant circuit are not daisy-chained, connect the transmission line for the central control system to TB7 of the OC. (Note a).To maintain the central control even during an OC failure or a power failure, connect TB7 on OC and OS together. (If there is a problem with the outdoor unit whose power jumper was moved from CN41 to CN40, central control is not possible, even if TB7's are daisy-chained.)

c) When connecting TB7, only commence after checking that the voltage is below 20 VDC.

- Only use shielded cables.

Shielded cable connection

Daisy-chain the S terminal on the terminal block (TB7) on the outdoor units (OC, OS) with the shield wire of the shielded cable. Short-circuit the earth terminal (⏚) and the S terminal on the terminal block (TB7) on the outdoor unit whose power jumper connector is mated with CN40.

3) MA remote controller wiring

Same as 2-7-1

When 2 remote controllers are connected to the system

Same as 2-7-1

Group operation of indoor units

Same as 2-7-1

4) LOSSNAY connection

Connect terminals M1 and M2 on the terminal block (TB5) on the indoor units (IC) to the appropriate terminals on the terminal block for indoor-outdoor transmission line (TB5) on LOSSNAY (LC). (Non-polarized two-wire)

- Indoor units must be interlocked with the LOSSNAY unit using the system controller. (Refer to the operation manual for the system controller for the setting method.) Interlock setting from the remote controller is required if the ON/OFF remote controller alone is connected.

5) Switch setting

Address setting is required as follows.

(5) Address setting method

Procedures	Unit or controller			Address setting range	Setting method	Notes	Factory setting
1	Indoor unit	Main unit	IC	01 to 50	•Assign the smallest address to the main unit in the group. •In a system with a sub BC controller, make the settings for the indoor units in the following order. (i) Indoor unit to be connected to the main BC controller (ii) Indoor unit to be connected to sub BC controller 1 (iii) Indoor unit to be connected to sub BC controller 2 Make the settings for the indoor units in the way that the formula "(i) < (ii) < (iii)" is true. When using additional BC controllers (3 to 11 BC controllers), make the same settings.	•Port number setting is required •To perform a group operation of indoor units that feature different functions, designate the indoor unit in the group with the greatest number of functions as the main unit.	00
		Sub unit			Assign sequential numbers starting with the address of the main unit in the same group +1. (Main unit address +1, main unit address +2, main unit address +3, etc.)		
2	LOSSNAY		LC	01 to 50	Assign an arbitrary but unique address to each of these units after assigning an address to all indoor units.	None of these addresses may overlap any of the indoor unit addresses.	00
3	MA remote controller	Main remote controller	MA	No settings required.	-	Make the same indoor unit group settings with the system controller as the ones that were made with the MA remote controller.	Main
		Sub remote controller	MA	Sub remote controller	Settings to be made with the Sub/Main switch		
4	Outdoor unit		OC OS	51 to 100	•Assign sequential address to the outdoor units in the same refrigerant circuit. •The outdoor units are automatically designated as OC and OS.(Note)	•To set the address to 100, set the rotary switches to 50. •If the addresses that is assigned to the main BC controller overlaps any of the addresses that are assigned to the outdoor units or to the sub BC controller, use a different, unused address within the setting range. •The use of a sub BC controller requires the connection of a main BC controller.	00
5	Auxiliary outdoor unit	BC controller (Main)	BC	51 to 100	OC (or OS if it exists) +1		
		BC controller (Sub)	BS		Assign an address that equals the sum of the smallest address of the indoor units that are connected to the sub BC controller and 50.		

Note

The outdoor units in the same refrigerant circuit are automatically designated as OC and OS.
They are designated as OC and OS in the descending order of capacity (ascending order of address if the capacities are the same).

2-7-6 System with Multiple BC Controllers

(1) Sample control wiring

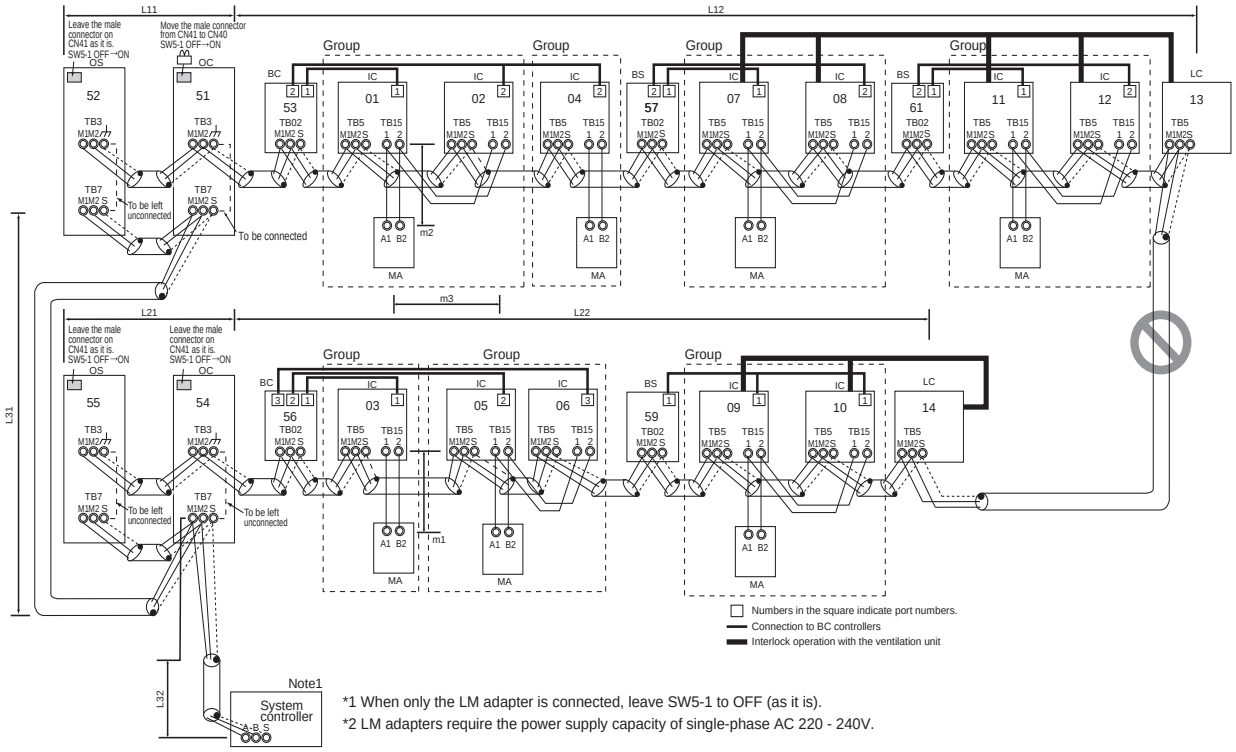

*1 When only the LM adapter is connected, leave SW5-1 to OFF (as it is).
*2 LM adapters require the power supply capacity of single-phase AC 220 - 240V.

(2) Cautions

1) ME remote controller and MA remote controller cannot both be connected to the same group of indoor units.
2) No more than 2 MA remote controllers can be connected to a group of indoor units.
   When the PAR-CT01MA series, PAR-4"x"MA series, or PAR-3"x"MA series ("x" represents 0 or later) is connected to a group, no other MA remote controllers can be connected to the same group.
3) Do not connect the terminal blocks (TB5) on the indoor units that are connected to different outdoor units with each other.
4) Replacement of male power jumper connector (CN41) must be performed only on one of the outdoor units.
5) Short-circuit the S (shield) terminal of the terminal block for the central control unit (TB7) and the ground terminal (⏚) on the outdoor unit whose power jumper was moved from CN41 to CN40.
6) When the number of the connected indoor units is as shown in the table below, one or more transmission boosters (sold separately) are required.
   To connect two transmission boosters, connect them in parallel.
   (Observe the maximum number of connectable indoor units that are listed in the specifications for each outdoor unit.)

	Number of transmission booster (sold separately) required	
	1 unit	2 units
When the P72 and P96 models are not included in the connected indoor units	27 - 50 units	-
When the P72 and P96 models are included in the connected indoor units	21 - 39 units	40 - 50 units

- The table above shows the number of transmission boosters that is required by the system with three BC controllers. For each BC controller added or subtracted, subtract or add two indoor units.
- Refer to the DATABOOK for further information about how many booster units are required for a given system.

7) When a power supply unit is connected to the transmission line for centralized control, leave the power jumper connector on CN41 as it is (factory setting).

(3) Maximum allowable length

1) Indoor/outdoor transmission line
   Maximum distance (1.25mm^2 [AWG16] or larger)
   L11+L12≤200m [656ft]
   L21+L22≤200m [656ft]
2) Transmission line for centralized control
   L31+L32(L21) ≤200m [656ft]
3) MA remote controller wiring
   Maximum overall line length
   (0.3 to 1.25mm^2 [AWG22 to 16])
   m1≤200m [656ft]
   m2+m3≤200m [656ft]
4) Maximum line distance via outdoor unit
   (1.25mm^2 [AWG16] or larger)
   L32+L31+L12(L11) ≤500 m [1640 ft] (1000 m [3280 ft]) *1
   L32+L22(L21) ≤500 m [1640 ft] (1000 m [3280 ft]) *1
   L12(L11)+L31+L22(L21) ≤500 m [1640 ft] (1000 m [3280 ft]) *1
   *1 When the wiring length exceeds 500 m [1640 ft], consult the sales office.

(4) Wiring method

1) Indoor/outdoor transmission line

Daisy-chain terminals M1 and M2 of the terminal block for indoor-outdoor transmission line (TB3) on the outdoor units (OC and OS) (Note a), of the terminal block for indoor-outdoor transmission line (TB02) on the main and sub BC controllers (BC and BS), and of the terminal block for indoor-outdoor transmission line (TB5) on each indoor unit (IC). (Non-polarized two-wire)

- Only use shielded cables.

Note

a) The outdoor units in the same refrigerant circuit are automatically designated as OC and OS in the order of capacity from large to small (if two or more units have the same capacity, in the order of address from small to large).

Shielded cable connection

Daisy-chain the ground terminal (⏚) on the outdoor units (OC and OS), the S terminal of the terminal block (TB02) on the BC and BS, and the S terminal of the terminal block (TB5) on the indoor unit (IC) with the shield of the shielded cable.

2) Transmission line for centralized control

Daisy-chain terminals A and B of the system controller, M1 and M2 terminals of TB7 (terminal block for centralized control system connection) on the outdoor units (OC) in different refrigerant systems, and M1 and M2 terminals of TB7 (terminal block for centralized control system connection) on the outdoor units (OC and OS) in the same refrigerant circuit. (Note b)
If a power supply unit is not connected to the transmission line for centralized control, replace the power jumper connector on the control board from CN41 to CN40 on only one of the outdoor units.
When connecting a system controller, set the centralized control switch (SW5-1) on the control board of all indoor units to "ON."

Note

b) If TB7's on the outdoor units in the same refrigerant circuit are not daisy-chained, connect the transmission line for the central control system to TB7 of the OC. (Note a).To maintain the central control even during an OC failure or a power failure, connect TB7 on OC and OS together. (If there is a problem with the outdoor unit whose power jumper was moved from CN41 to CN40, central control is not possible, even if TB7's are daisy-chained.)

c) When connecting TB7, only commence after checking that the voltage is below 20 VDC.

- Only use shielded cables.

Shielded cable connection

Daisy-chain the S terminal of the terminal block (TB7) on the system controller, OC, and OS with the shield of the shielded cable. Short-circuit the earth terminal (⏚) and the S terminal on the terminal block (TB7) on the outdoor unit whose power jumper connector is mated with CN40.

3) MA remote controller wiring

Same as 2-7-1

When 2 remote controllers are connected to the system

Same as 2-7-1

Group operation of indoor units

Same as 2-7-1

4) LOSSNAY connection

Connect terminals M1 and M2 on the terminal block (TB5) on the indoor unit (IC) to the appropriate terminals on the terminal block for indoor-outdoor transmission line (TB5) on LOSSNAY (LC). (Non-polarized two-wire)

- Indoor units must be interlocked with the LOSSNAY unit using the system controller. (Refer to the operation manual for the system controller for the setting method.) Interlock setting from the remote controller is required if the ON/OFF remote controller alone or the LM adapter alone is connected.

5) Switch setting

Address setting is required as follows.

(5) Address setting method

Procedures	Unit or controller			Address setting range	Setting method	Notes	Factory setting
1	Indoor unit	Main unit	IC	01 to 50	♦Assign the smallest address to the main unit in the group. ♦In a system with a sub BC controller, make the settings for the indoor units in the following order. (i) Indoor unit to be connected to the main BC controller (ii) Indoor unit to be connected to sub BC controller 1 (iii) Indoor unit to be connected to sub BC controller 2 Make the settings for the indoor units in the way that the formula "(i) < (ii) < (iii)" is true. When using additional BC controllers (3 to 11 BC controllers), make the same settings.	♦Port number setting is required ♦To perform a group operation of indoor units that feature different functions, designate the indoor unit in the group with the greatest number of functions as the main unit.	00
		Sub unit			Assign sequential numbers starting with the address of the main unit in the same group +1. (Main unit address +1, main unit address +2, main unit address +3, etc.)		
2	LOSSNAY		LC	01 to 50	Assign an arbitrary but unique address to each of these units after assigning an address to all indoor units.	None of these addresses may overlap any of the indoor unit addresses.	00
3	MA remote controller	Main remote controller	MA	No settings required.	-	Make the same indoor unit group settings with the system controller as the ones that were made with the MA remote controller.	Main
		Sub remote controller	MA	Sub remote controller	Settings to be made with the Sub/Main switch		
4	Outdoor unit		OC OS	51 to 100	♦The sum of the smallest address of the indoor units in the same system and 50. ♦Assign sequential address to the outdoor units in the same refrigerant circuit. ♦The outdoor units are automatically designated as OC and OS.(Note)	♦To set the address to 100, set the rotary switches to 50.	00
5	Auxiliary unit	BC controller (Main)	BC	51 to 100	OC (or OS if it exists) +1	♦To set the address to 100, set the rotary switches to 50. ♦If the addresses that is assigned to the main BC controller overlaps any of the addresses that are assigned to the outdoor units or to the sub BC controller, use a different, unused address within the setting range. ♦The use of a sub BC controller requires the connection of a main BC controller.	00
		BC controller (Sub)	BS	51 to 100	Assign an address that equals the sum of the smallest address of the indoor units that are connected to the sub BC controller and 50.		

Note

The outdoor units in the same refrigerant circuit are automatically designated as OC and OS.
They are designated as OC and OS in the descending order of capacity (ascending order of address if the capacities are the same).

2-8 Example System with an ME Remote Controller

2-8-1 System with a Connection of System Controller to Centralized Control Transmission Line

(1) Sample control wiring

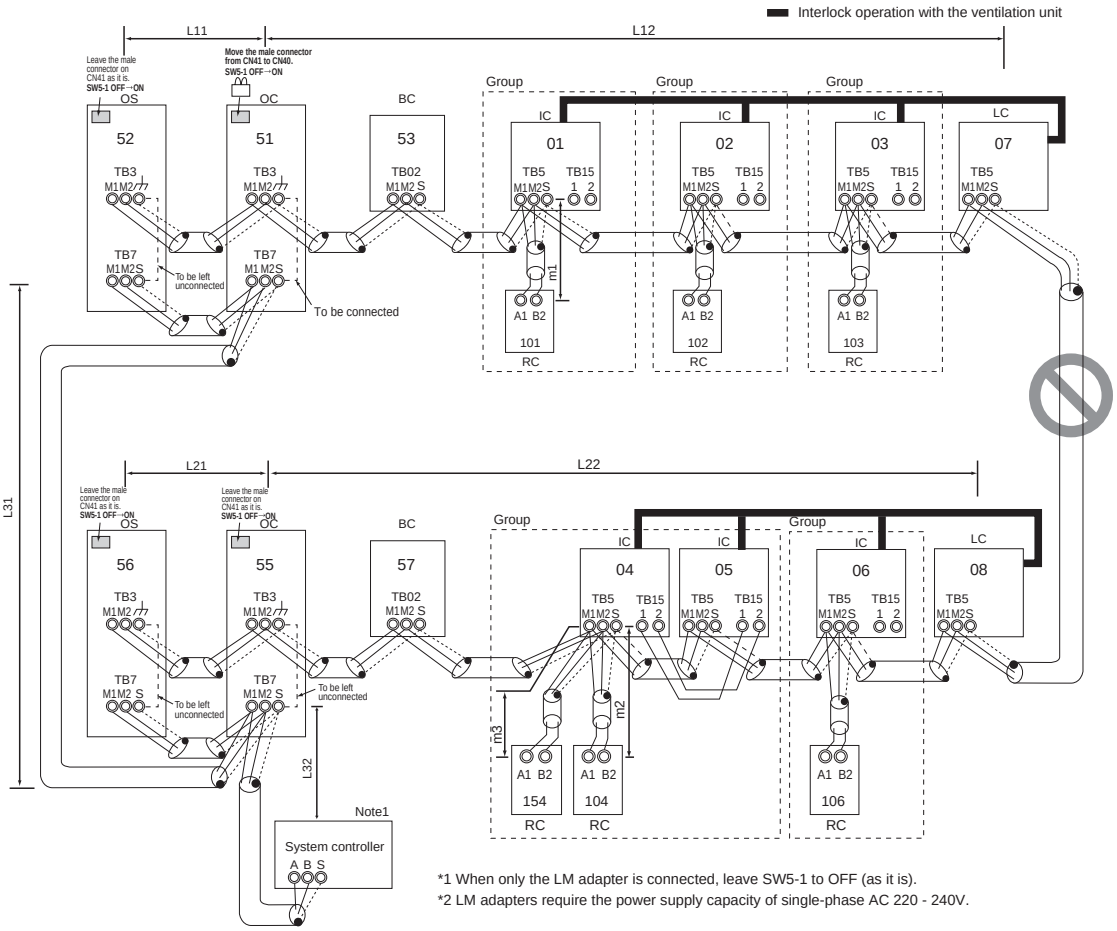

*1 When only the LM adapter is connected, leave SW5-1 to OFF (as it is).
*2 LM adapters require the power supply capacity of single-phase AC 220 - 240V.

(2) Cautions

1) ME remote controller and MA remote controller cannot both be connected to the same group of indoor units.
2) No more than 2 ME remote controllers can be connected to a group of indoor units.
3) Do not connect the terminal blocks (TB5) on the indoor units that are connected to different outdoor units with each other.
4) Replace the power jumper connector of the control board from CN41 to CN40 on only one of the outdoor units.
5) Provide an electrical path to ground for the S terminal on the terminal block for centralized control on only one of the outdoor units.
6) When the number of the connected indoor units is as shown in the table below, one or more transmission boosters (sold separately) are required.
   To connect two transmission boosters, connect them in parallel. (Observe the maximum number of connectable indoor units that are listed in the specifications for each outdoor unit.)

	Number of transmission booster (sold separately) required		
	1 unit	2 units	3 units
When the P72 and P96 models are not included in the connected indoor units	15 - 34 units	35 - 50 units	-
When the P72 and P96 models are included in the connected indoor units	11 - 26 units	27 - 42 units	43 - 50 units

   ♦The table above shows the number of transmission boosters that is required by the system with three BC controllers. For each BC controller added or subtracted, subtract or add two indoor units.
   ♦Refer to the DATABOOK for further information about how many booster units are required for a given system.
7) When a power supply unit is connected to the transmission line for centralized control, leave the power jumper connector on CN41 as it is (factory setting).

(3) Maximum allowable length

1) Indoor/outdoor transmission line
   Same as 2-7-3
2) Transmission line for centralized control
   Same as 2-7-4

3) ME remote controller wiring

Maximum overall line length
(0.3 to 1.25mm^2 [AWG22 to 16])
m1≤10m [32ft]
m2+m3≤10m [32ft]
If the standard-supplied cable must be extended, use a cable with a diameter of 1.25mm^2 [AWG16]. The section of the cable that exceeds 10m [32ft] must be included in the maximum indoor-outdoor transmission line distance described in 1).
When connected to the terminal block on the Simple remote controller, use cables that meet the following cable size specifications: 0.75 - 1.25 mm^2 [AWG18-16].

4) Maximum line distance via outdoor unit
(1.25 mm^2 [AWG16] or large)

Same as 2-7-4

(4) Wiring method

1) Indoor/outdoor transmission line

   Same as 2-7-2

   Shielded cable connection

   Same as 2-7-2

2) Transmission line for centralized control

   Same as 2-7-4

   Shielded cable connection

   Same as 2-7-4

3) ME remote controller wiring

   ME remote controller is connectable anywhere on the indoor-outdoor transmission line.

   When 2 remote controllers are connected to the system

   Refer to the section on 5) Switch setting.

   Performing a group operation (including the group operation of units in different refrigerant circuits).

   Refer to the section on 5) Switch setting.

4) LOSSNAY connection

   Same as 2-7-4

5) Switch setting

   Address setting is required as follows.

(5) Address setting method

Procedures	Unit or controller			Address setting range	Setting method	Notes	Factory setting
1	Indoor unit	Main unit	IC	01 to 50	♦Assign the smallest address to the main unit in the group. ♦In a system with a sub BC controller, make the settings for the indoor units in the following order. (i) Indoor unit to be connected to the main BC controller (ii) Indoor unit to be connected to sub BC controller 1 (iii) Indoor unit to be connected to sub BC controller 2 Make the settings for the indoor units in the way that the formula "(i) < (ii) < (iii)" is true. When using additional BC controllers (3 to 11 BC controllers), make the same settings.	♦Port number setting is required ♦To perform a group operation of indoor units that have different functions, set the indoor unit in the group with the greatest number of functions as the main unit.	00
		Sub unit			Assign sequential numbers starting with the address of the main unit in the same group +1. (Main unit address +1, main unit address +2, main unit address +3, etc.)		
2	LOSSNAY		LC	01 to 50	Assign an arbitrary but unique address to each of these units after assigning an address to all indoor units.	None of these addresses may overlap any of the indoor unit addresses.	00
3	ME remote controller	Main remote controller	RC	101 to 150	Add 100 to the main unit address in the group	♦It is not necessary to set the 100s digit. ♦To set the address to 200, set the rotary switches to 00.	101
		Sub remote controller	RC	151 to 200	Add 150 to the main unit address in the group		
4	Outdoor unit		OC OS	51 to 100	♦Assign sequential address to the outdoor units in the same refrigerant circuit. ♦The outdoor units are automatically designated as OC and OS.(Note)	♦To set the address to 100, set the rotary switches to 50. ♦If the addresses that is assigned to the main BC controller overlaps any of the addresses that are assigned to the outdoor units or to the sub BC controller, use a different, unused address within the setting range. ♦The use of a sub BC controller requires the connection of a main BC controller.	00
5	Auxiliary outdoor unit	BC controller (Main)	BC	51 to 100	OC (or OS if it exists) +1		
		BC controller (Sub)	BS		Assign an address that equals the sum of the smallest address of the indoor units that are connected to the sub BC controller and 50.		

Note

The outdoor units in the same refrigerant circuit are automatically designated as OC and OS.
They are designated as OC and OS in the descending order of capacity (ascending order of address if the capacities are the same).

2-9 Example System with an MA and an ME Remote Controller

2-9-1 System with a Connection of System Controller to Centralized Control Transmission Line

(1) Sample control wiring

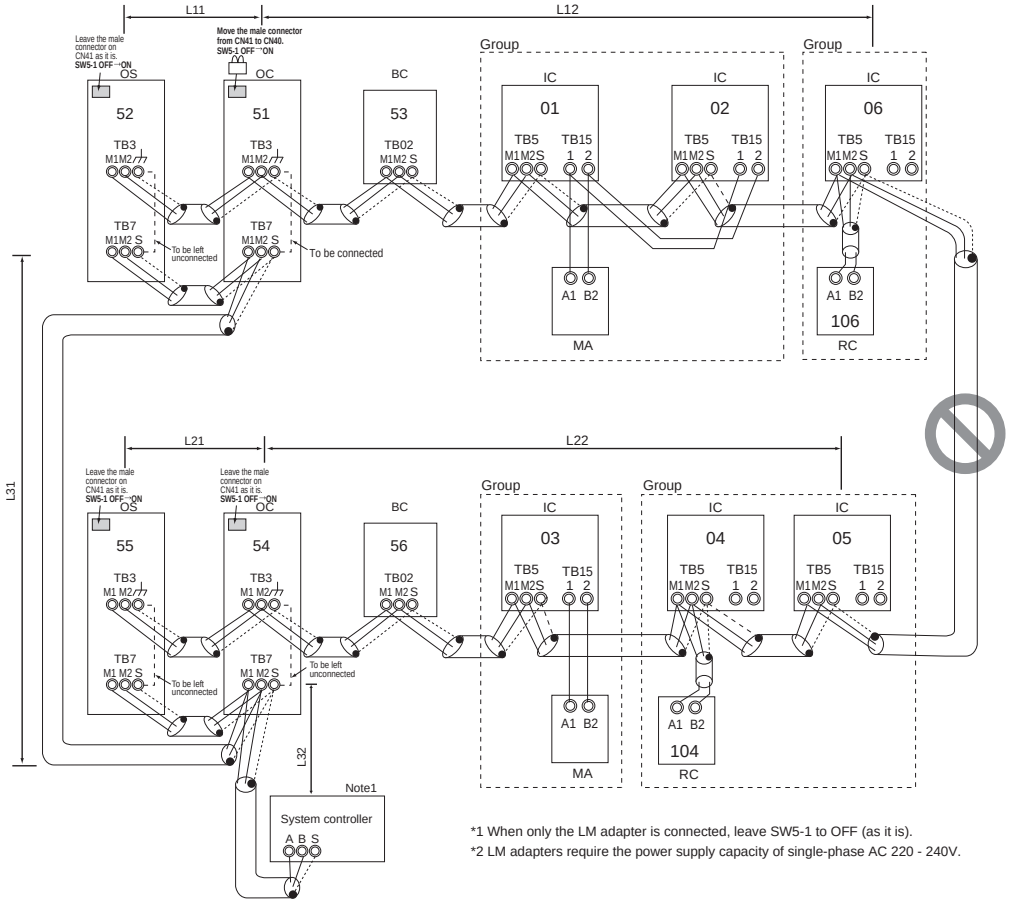

*1 When only the LM adapter is connected, leave SW5-1 to OFF (as it is).
*2 LM adapters require the power supply capacity of single-phase AC 220 - 240V.

(2) Cautions

1) Be sure to connect a system controller.
2) ME remote controller and MA remote controller cannot both be connected to the same group of indoor units.
3) Assign to the indoor units connected to the MA remote controller addresses that are smaller than those of the indoor units that are connected to the ME remote controller.
4) No more than 2 ME remote controllers can be connected to a group of indoor units.
5) No more than 2 MA remote controllers can be connected to a group of indoor units.
   When the PAR-CT01MA series, PAR-4"x"MA series, or PAR-3"x"MA series ("x" represents 0 or later) is connected to a group, no other MA remote controllers can be connected to the same group.
6) Do not connect the terminal blocks (TB5) on the indoor units that are connected to different outdoor units with each other.
7) Replace the power jumper connector of the control board from CN41 to CN40 on only one of the outdoor units.
8) Provide an electrical path to ground for the S terminal on the terminal block for centralized control on only one of the outdoor units.
9) When the number of the connected indoor units is as shown in the right table, one or more transmission boosters (sold separately) are required.
   To connect two transmission boosters, connect them in parallel.
   (Observe the maximum number of connectable indoor units that are listed in the specifications for each outdoor unit.)

	Number of transmission booster (sold separately) required		
	1 unit	2 units	3 units
When the P72 and P96 models are not included in the connected indoor units	15 - 34 units	35 - 50 units	-
When the P72 and P96 models are included in the connected indoor units	11 - 26 units	27 - 42 units	43 - 50 units

- The above table shows the number of transmission boosters that is required by the system with three BC controllers. For each BC controller added or subtracted, subtract or add two indoor units.
- Refer to the DATABOOK for further information about how many booster units are required for a given system.

10) When a power supply unit is connected to the transmission line for centralized control, leave the power jumper connector on CN41 as it is (factory setting).

(3) Maximum allowable length

1) Indoor/outdoor transmission line

   Same as 2-7-3
2) Transmission line for centralized control

   Same as 2-7-4
3) MA remote controller wiring

   Same as 2-7-1
4) ME remote controller wiring

   Same as 2-8-1
5) Maximum line distance via outdoor unit (1.25 mm^2 [AWG16] or larger)

   Same as 2-7-4

(4) Wiring method

1) Indoor/outdoor transmission line

   Same as 2-7-2

   Shielded cable connection

   Same as 2-7-2
2) Transmission line for centralized control

   Same as 2-7-4

   Shielded cable connection

   Same as 2-7-4
3) MA remote controller wiring

   (When 2 remote controllers are connected to the system, Group operation of indoor units)

   Same as 2-7-1
4) ME remote controller wiring

   (When 2 remote controllers are connected to the system, Group operation of indoor units)

   Same as 2-8-1
5) LOSSNAY connection

   Same as 2-7-4
6) Switch setting

   Address setting is required as follows.

(5) Address setting method

Procedures	Unit or controller				Address setting range	Setting method	Notes	Factory setting
1	Operation with the MA remote controller	Indoor unit	Main unit	IC	01 to 50	•Assign the smallest address to the main unit in the group. •In a system with a sub BC controller, make the settings for the indoor units in the following order. (i) Indoor unit to be connected to the main BC controller (ii) Indoor unit to be connected to sub BC controller 1 (iii) Indoor unit to be connected to sub BC controller 2 Make the settings for the indoor units in the way that the formula "(i) < (ii) < (iii)" is true. When using additional BC controllers (3 to 11 BC controllers), make the same settings.	•Assign an address smaller than that of the indoor unit that is connected to the ME remote controller. •Enter the same indoor unit group settings on the system controller as the ones that were entered on the MA remote controller. •To perform a group operation of indoor units that have different functions, designate the indoor unit in the group with the greatest number of functions as the main unit. •Port number setting is required.	00
			Sub unit	IC	01 to 50	Assign sequential numbers starting with the address of the main unit in the same group +1. (Main unit address +1, main unit address +2, main unit address +3, etc.)		
		MA remote controller	Main remote controller	MA	No settings required.	-		Main
			Sub remote controller	MA	Sub remote controller	Settings to be made according to the remote controller function selection		
2	Operation with the ME remote controller	Indoor unit	Main unit	IC	01 to 50	Assign the smallest address to the main unit in the group.	•Assign an address higher than those of the indoor units that are connected to the MA remote controller. •Make the initial settings for the indoor unit group settings via the system controller. •To perform a group operation of indoor units that have different functions, designate the indoor unit in the group with the greatest number of functions as the main unit. •Port number setting is required. •Addresses that are assigned to the indoor units that are connected to the sub BC controller should be higher than the addresses that are assigned to the indoor units that are connected to the main BC controller.	00
			Sub unit	IC	01 to 50	Assign sequential numbers starting with the address of the main unit in the same group +1. (Main unit address +1, main unit address +2, main unit address +3, etc.)		
		ME remote controller	Main remote controller	RC	101 to 150	Add 100 to the main unit address in the group.	•It is not necessary to set the 100s digit. •To set the address to 200, set it to 00.	101
			Sub remote controller	RC	151 to 200	Add 150 to the main unit address in the group.		
3	LOSSNAY			LC	01 to 50	Assign an arbitrary but unique address to each of these units after assigning an address to all indoor units.	None of these addresses may overlap any of the indoor unit addresses.	00
4	Outdoor unit			OC OS	51 to 100	•Assign sequential address to the outdoor units in the same refrigerant circuit. •The outdoor units are automatically designated as OC and OS.(Note)	•To set the address to 100, set it to 50. •If the addresses that is assigned to the main BC controller overlaps any of the addresses that are assigned to the outdoor units or to the sub BC controller, use a different, unused address within the setting range. •The use of a sub BC controller requires the connection of a main BC controller.	00
5	Auxiliary outdoor unit	BC controller (Main)		BC	51 to 100	OC (or OS if it exists) +1		
		BC controller (Sub)		BS		Assign an address that equals the sum of the smallest address of the indoor units that are connected to the sub BC controller and 50.		

Note

The outdoor units in the same refrigerant circuit are automatically designated as OC and OS.
They are designated as OC and OS in the descending order of capacity (ascending order of address if the capacities are the same).

2-10 Restrictions on Refrigerant Pipes

2-10-1 Restrictions on Refrigerant Pipe Length

(1) System that requires 16 BC controller ports or fewer <System with only the main BC controller or standard BC controller>

Note1. No Header usable on PURY system.
Note2. Indoor unit sized P72-P96 should be connected to BC controller via Y shape joint CMY-R160-J1.
Note3. Indoor unit sized P72-P96 does NOT share BC controller ports with other Indoor units ;
Note4. As bents cause pressure loss on transportation of refrigerant, fewer bents design is better ;
Piping length needs to consider the actual length and equivalent length which bents are counted.
Equivalent piping length (m)=Actual piping length+"M" x Number of bent.
Note5. Set DIP-SW 4-6 to ON of BC controller, in case of connected Indoor unit sized P72-P96 with 2 ports.
Note6. Do not connect multiple indoor units to the same port when operating each of them in different mode (cooling, heating, stop, and thermo-off). In case of connecting multiple indoor units to the same port, connecting all indoor units to one remote controller and switching SW1-1 ON in the all connected indoor units (switch to thermostat built in the remote controller) are recommended.
Note7. Indoor capactiy is described as its model size. For example, PEFY-P24NMAU-**, its capacity is P24.
Note8. Total down-stream Indoor capacity is the summary of the model size of Indoors down-stream. For example, PEFY-P24NMAU-** + PEFY-P06NMAU-**: Total Indoor capacity = P24 + P06 = P30.
Note9. To connect the BC controller to the main pipe, use the reducer (CMY-R301S-G, CMY-R302S-G1, or CMY-R304S-G1).
Note10. Install the pipes correctly referring to the section titled "Outdoor Twinning Kit."

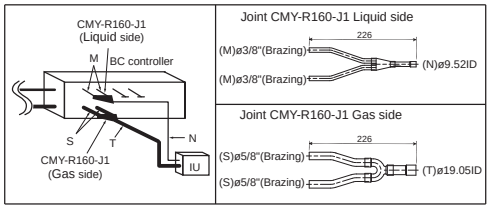

Fig. A

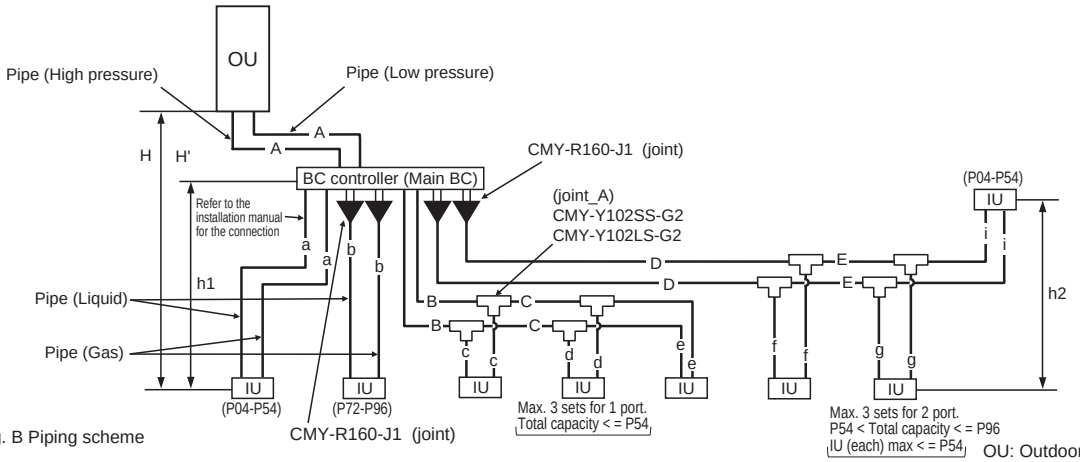

Fig. B Piping scheme

OU: Outdoor unit, IU: Indoor unit

Piping length limitation *8 **(m [ft.])**

Item	Piping in the figure	Max. length	Max. equivalent length
Total piping length (Total length of high pressure and liquid pipes)	A+B+C+D+E+a+b+c+d+e+f+g+i	*1	-
Farthest IU from OU	A+D+E+i	165 [541']	190 [623']
Distance between OU and BC	A	110 [360'] *1	110 [360'] *1
Farthest IU from BC controller	D+E+i	60 [197'] *2*3	60 [197'] *2*3
Height between OU and IU (OU above IU)	H	50 [164'] *6	-
Height between OU and IU (OU under IU)	H'	40 [131'] *7	-
Height between IU and BC	h1	15 [49'] (10 [32']) *4	-
Height between IU and IU	h2	30 [98'] (20 [65']) *5	-

Bent equivalent length

Outdoor Model	M (m/bent [ft./bent])
(E)P72T/YNU	0.35 [1.15']
(E)P96T/YNU	0.42 [1.38']
(E)P120T/YNU	0.50 [1.64']
(E)P144T/YNU	0.50 [1.64']
(E)P168T/YNU	0.50 [1.64']
EP192T/YNU	0.50 [1.64']
EP216T/YNU	0.70 [2.30']
EP240T/YNU	0.70 [2.30']

OU: Outdoor Unit; IU: Indoor Unit; BC: BC controller
*1. Refer to the pages 36 - 39.
*2. For details, refer to Fig. 1.
*3. When the P72 or P96 model of indoor units are connected to the system, the maximum distance from the BC controller to the farthest indoor unit (indicated as "D + E + i" in the figure is 40 meters [131 feet].)
*4. Distance of Indoor sized P72, P96 from BC must be less than 10 m [32 ft], if any.
*5. Distance of Indoor sized P72, P96 from IU must be less than 20 m [65 ft], if any.
*6. 113 m [370 ft] is available depending on the model and installation conditions. For more detailed information, contact your local distributor.
*7. 60 m [197 ft] is available depending on the model and installation conditions. For more detailed information, contact your local distributor.
*8. Total length of high-pressure pipes and liquid pipes

Fig. 1 Piping length and height between IU and BC controller

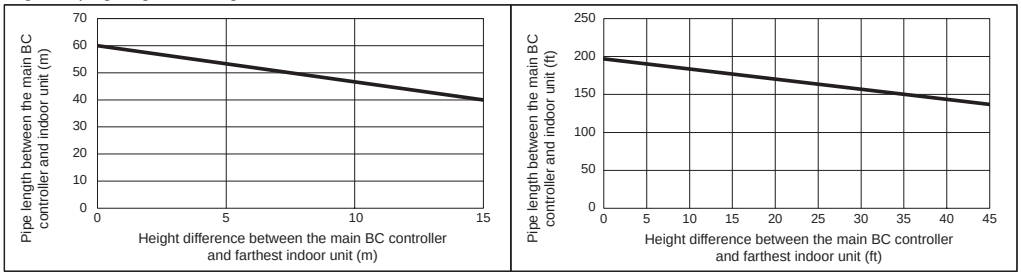

(2) System that requires more than 16 BC controller ports or with multiple BC controllers <System with one outdoor unit>

Note1. No Header usable on PURY system.
Note2. Indoor unit sized P72-P96 should be connected to BC controller via Y shape joint CMY-R160-J1.
Note3. Indoor unit sized P72-P96 does NOT share BC controller ports with other Indoor units ;
Note4. As bents cause pressure loss on transportation of refrigerant, fewer bents design is better ;
Piping length needs to consider the actual length and equivalent length which bents are counted.
Equivalent piping length (m)=Actual piping length+"M" x Number of bent.
Note5. Set DIP-SW 4-6 to ON of BC controller, in case of connected Indoor unit sized P72-P96 with 2 ports.
Note6. Do not connect multiple indoor units to the same port when operating each of them in different mode (cooling, heating, stop, and thermo-off). In case of connecting multiple indoor units to the same port, connecting all indoor units to one remote controller and switching SW1-1 ON in the all connected indoor units (switch to thermostat built in the remote controller) are recommended.
Note7. The maximum total capacity of indoor units that can be connected to each sub BC controller CMB-P•NU-KB1/2 is 126.
Note8. Indoor capactiy is described as its model size. For example, PEFY-P24NMAU-**, its capacity is P24.
Note9. Total down-stream Indoor capacity is the summary of the model size of Indoors down-stream. For example,
PEFY-P24NMAU-** + PEFY-P06NMAU-** : Total Indoor capacity = P24 + P06 = P30.
Note10. To connect the BC controller to the main pipe, use the reducer (CMY-R301S-G, CMY-R302S-G1, or CMY-R304S-G1).
Note11. To connect the sub BC controller to the main BC controller, use the reducer (CMY-R303S-G1, CMY-R305S-G1, or CMY-R306S-G).
Note12. Install the pipes correctly referring to the section titled "Outdoor Twinning Kit."
Note13. Up to 11 sub BC controllers can be connected.

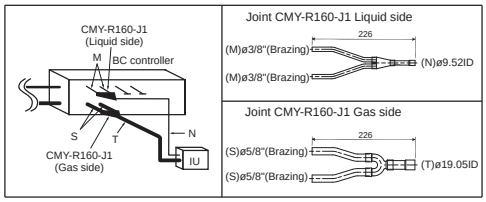

Fig. C

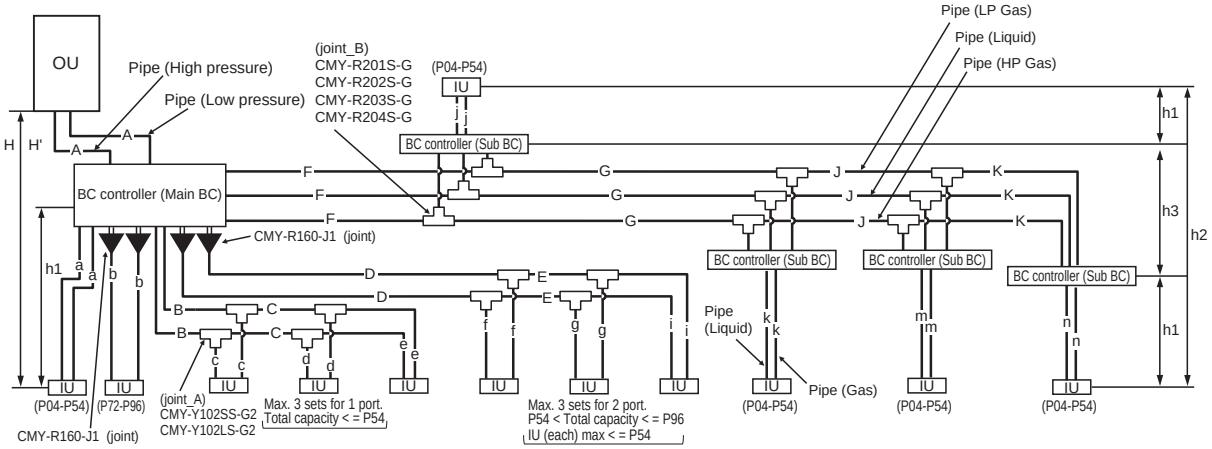

Fig. D Piping scheme

OU: Outdoor unit, IU: Indoor unit

Piping length limitation *11

(m [ft.])

Item	Piping in the figure	Max. length	Max. equivalent length
Total piping length (Total length of high pressure and liquid pipes)	A+B+C+D+E+F+G+J+K+a+b+c+d+e+f+g+i+j+k+m+n	*1	-
Farthest IU from OU	A+F+G+J+K+n	165 [541']	190 [623']
Distance between OU and BC	A	110 [360'] *1	110 [360'] *1
Farthest IU from BC controller	D+E+i	60 [197'] *2*3	60 [197'] *2*3
Farthest IU from BC controller via Sub BC controller	F+G+J+K+n	90 [295'] *9	90 [295'] *9
Height between OU and IU (OU above IU)	H	50 [164'] *7	-
Height between OU and IU (OU under IU)	H'	40 [131'] *8	-
Height between IU and BC	h1	15 [49'] (10 [32']) *4	-
Height between IU and IU	h2	30 [98'] (20 [65']) *5	-
Height between BC(Main or Sub) and BC(Sub)	h3	15 [49'] (10 [32']) *6	-

Bent equivalent length

Outdoor Model	M(m/bent [ft./bent])
(E)P72T/YNU	0.35 [1.15']
(E)P96T/YNU	0.42 [1.38']
(E)P120T/YNU	0.50 [1.64']
(E)P144T/YNU	0.50 [1.64']
(E)P168T/YNU	0.50 [1.64']
EP192T/YNU	0.50 [1.64']
EP216T/YNU	0.70 [2.30']
EP240T/YNU	0.70 [2.30']

OU: Outdoor Unit; IU: Indoor Unit; BC: BC controller
*1. Refer to the pages 36 - 39.
*2. For details, refer to Fig. 2.
*3. When the P72 or P96 model of indoor units are connected to the system, the maximum distance from the BC controller to the farthest indoor unit (indicated as "D + E + i" in the figure is 40 meters [131 feet].)
*4. Distance of Indoor sized P72, P96 from BC must be less than 10 m [32 ft], if any.
*5. Distance of Indoor sized P72, P96 from IU must be less than 20 m [65 ft], if any.
*6. When using 2 or more Sub BC controllers, max. height "h3" should be considered.
*7. 113 m [370 ft] is available depending on the model and installation conditions. For more detailed information, contact your local distributor.
*8. 60 m [197 ft] is available depending on the model and installation conditions. For more detailed information, contact your local distributor.
*9. When the piping length or the vertical separation exceeds the limit specified in Fig. 2, connect a sub BC to the system. The restriction for a system with a sub BC connection is shown in Fig. 3. When a given system configuration falls within the shaded area in Fig. 3, increase the size of the high-pressure pipe and the liquid pipe between the main BC and sub BC by one size. When using P12, P15, P18, P36, or P48 model of indoor units, increase the size of the liquid branch pipe between the sub BC and indoor unit by one size.
When using indoor models P54 or larger, the restrictions shown in Fig. 2 cannot be exceeded.
*10. When the high pressure piping length is 65 m [213 ft] or less, use ø22.2 (ø7/8) pipe.
When the high pressure piping length exceeds 65 m [213 ft], use ø22.2 (ø7/8) pipe until 65 m [213 ft], use ø28.58 (ø1-1/8) pipe for the part that exceeds 65 m [213 ft].
*11. Total length of high-pressure pipes and liquid pipes

Piping length and height between IU and BC controller

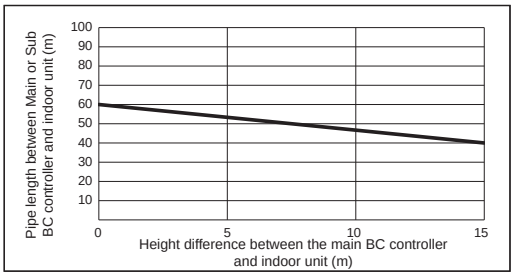

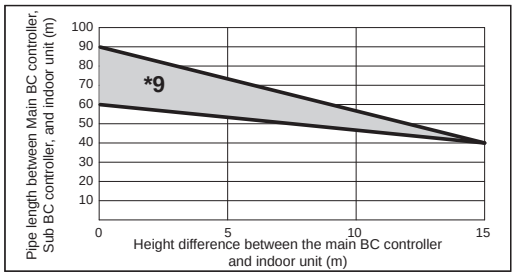

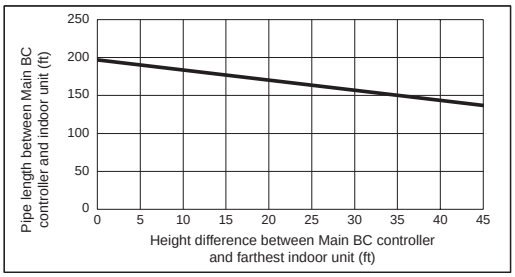

Fig. 2

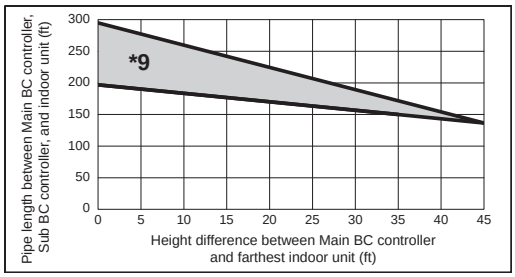

Fig. 3

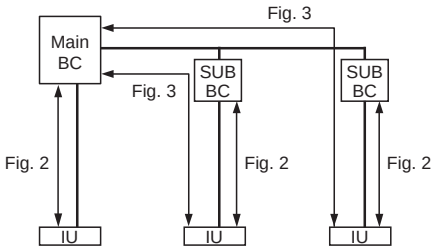

*9. When the piping length or the vertical separation exceeds the limit specified in Fig. 2, connect a sub BC to the system.
The restriction for a system with a sub BC connection is shown in Fig. 3.
When a given system configuration falls within the shaded area in Fig. 3, increase the size of the high-pressure pipe and the liquid pipe between the main BC and sub BC by one size.
The maximum liquid branch pipe diameter is ø19.05. If a given system already has a ø19.05-pipe between the main BC and sub BC, there is no need to increase the pipe size.
When using P12, P15, P18, P36, or P48 model of indoor units, increase the size of the liquid branch pipe between the sub BC and indoor unit by one size.
When using indoor models P54 or larger, the restrictions shown in Fig. 2 cannot be exceeded.

Piping "A"size selection rule **(mm [in.])**

Outdoor Model	Pipe(High pressure)	Pipe(Low pressure)
(E)P72T/YNU	ø15.88 [5/8"]	ø19.05 [3/4"]
(E)P96T/YNU	ø19.05 [3/4"]	ø22.20 [7/8"]
(E)P120T/YNU	ø19.05 [3/4"]	ø28.58 [1-1/8"]
(E)P144T/YNU	ø22.20 [7/8"]	ø28.58 [1-1/8"]
(E)P168T/YNU	ø22.20 [7/8"]	ø28.58 [1-1/8"]
EP192T/YNU	ø22.20 [7/8"]	ø28.58 [1-1/8"]
EP216T/YNU	ø22.20 [7/8"] *10	ø34.93 [1-3/8"]
EP240T/YNU	ø22.20 [7/8"] *10	ø34.93 [1-3/8"]

Piping "B", "C", "D", "E" size seleciton rule **(mm [in.])**

Total down-stream Indoor capacity	Pipe(Liquid)	Pipe(Gas)
P54 or less	ø9.52 [3/8"]	ø15.88 [5/8"]
P55-P72	ø9.52 [3/8"]	ø19.05 [3/4"]
P73-P96	ø9.52 [3/8"]	ø22.20 [7/8"]

Piping "a", "b", "c", "d", "e", "f", "g", "i", "j", "k", "m", "n" size selection rule **(mm [in.])**

Indoor Unit size	Pipe(Liquid)	Pipe(Gas)
P04-P18	ø6.35 [1/4"]	ø12.70 [1/2"]
P24-P54	ø9.52 [3/8"]	ø15.88 [5/8"]
P72	ø9.52 [3/8"]	ø19.05 [3/4"]
P96	ø9.52 [3/8"]	ø22.20 [7/8"]

Piping "F", "G", "J", "K" size selection rule **(mm [in.])**

Total down-stream Indoor capacity	Pipe(Liquid)	Pipe(HP Gas)	Pipe(LP Gas)
P72 or less	ø9.52 [3/8"]	ø15.88 [5/8"]	ø19.05 [3/4"]
P73 to P108	ø9.52 [3/8"]	ø19.05 [3/4"]	ø22.20 [7/8"]
P109 to P126	ø12.70 [1/2"]	ø19.05 [3/4"]	ø28.58 [1-1/8"]
P127 to P144	ø12.70 [1/2"]	ø22.20 [7/8"]	ø28.58 [1-1/8"]
P145 to P216	ø15.88 [5/8"]	ø22.20 [7/8"]	ø28.58 [1-1/8"]
P217 to P234	ø15.88 [5/8"]	ø28.58 [1-1/8"]	ø28.58 [1-1/8"]
P235 to P288	ø19.05 [3/4"]	ø28.58 [1-1/8"]	ø34.93 [1-3/8"]
P289 or above	ø19.05 [3/4"]	ø28.58 [1-1/8"]	ø41.28 [1-5/8"]

HP: High pressure, LP: Low pressure

Selection criteria for joints_A

Total down-stream Indoor capacity	Joint
-P72	CMY-Y102SS-G2
P73-P96	CMY-Y102LS-G2

Selection criteria for joints_B

Total down-stream Indoor capacity	Joint
-P120	CMY-R201S-G
P121-P216	CMY-R202S-G
P217-P234	CMY-R203S-G
P235-P360	CMY-R204S-G

(3) System that requires more than 16 BC controller ports or with multiple BC controllers <System with two outdoor units>

Note1. No Header usable on PURY system.
Note2. Indoor unit sized P72-P96 should be connected to BC controller via Y shape joint CMY-R160-J1.
Note3. Indoor unit sized P72-P96 does NOT share BC controller ports with other Indoor units ;
Note4. As bents cause pressure loss on transportation of refrigerant, fewer bents design is better ;
Piping length needs to consider the actual length and equivalent length which bents are counted.
Equivalent piping length (m)=Actual piping length+"M" x Number of bent.
Note5. Set DIP-SW 4-6 to ON of BC controller, in case of connected Indoor unit sized P72-P96 with 2 ports.
Note6. Do not connect multiple indoor units to the same port when operating each of them in different mode (cooling, heating, stop, and thermo-off). In case of connecting multiple indoor units to the same port, connecting all indoor units to one remote controller and switching SW1-1 ON in the all connected indoor units (switch to thermostat built in the remote controller) are recommended.
Note7. The maximum total capacity of indoor units that can be connected to each sub BC controller CMB-P•NU-KB1/2 is P126.
Note8. Indoor capactiy is described as its model size. For example, PEFY-P24NMAU-**, its capacity is P24.
Note9. Total down-stream Indoor capacity is the summary of the model size of Indoors down-stream. For example, PEFY-P24NMAU-** + PEFY-P06NMAU-** : Total Indoor capacity = P24 + P06 = P30.
Note10. To connect the BC controller to the main pipe, use the reducer (CMY-R301S-G, CMY-R302S-G1, or CMY-R304S-G1).
Note11. To connect the sub BC controller to the main BC controller, use the reducer (CMY-R303S-G1, CMY-R305S-G1, or CMY-R306S-G).
Note12. Install the pipes correctly referring to the section titled "Outdoor Twinning Kit."
Note13. Up to 11 sub BC controllers can be connected.

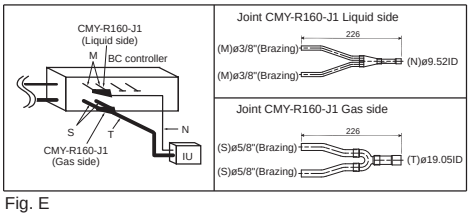

Fig. E

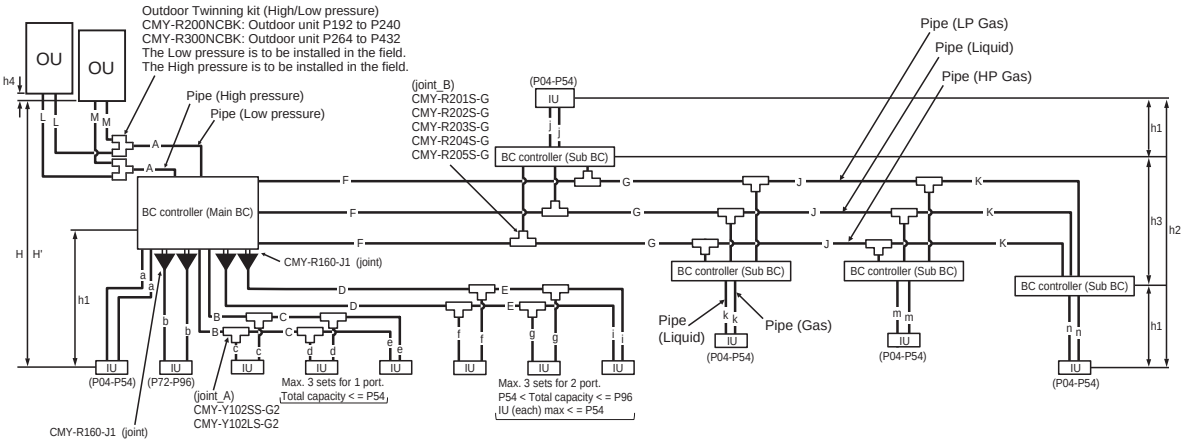

Fig. F Piping scheme

OU: Outdoor unit, IU: Indoor unit

Piping length limitation *11

(m [ft.])

Item	Piping in the figure	Max. length	Max. equivalent length
Total piping length (Total length of high pressure and liquid pipes)	L+M+A+B+C+D+E+F+G+J+K+a+b+c+d+e+f+g+i+j+k+m+n	*1	-
Farthest IU from OU	L(M)+A+F+G+J+K+n	165 [541']	190 [623']
Distance between OU and BC	L(M)+A	110 [360'] *1	110 [360'] *1
Farthest IU from BC controller	D+E+i	60 [197'] *2 *3	60 [197'] *2*3
Farthest IU from BC controller via Sub BC controller	F+G+J+K+n	90 [295'] *9	90 [295'] *9
Height between OU and IU (OU above IU)	H	50 [164'] *7	-
Height between OU and IU (OU under IU)	H'	40 [131'] *8	-
Height between IU and BC	h1	15 [49'] (10 [32']) *4	-
Height between IU and IU	h2	30 [98'] (20 [65']) *5	-
Height between BC(Main or Sub) and BC(Sub)	h3	15 [49'] (10 [32']) *6	-
Distance between Main unit and Sub unit	L+M	5 [16']	-
Height between Main unit and Sub unit	h4	0.1 [0.3']	-

OU: Outdoor Unit; IU: Indoor Unit; BC: BC controller
*1. Refer to the pages 36 - 39.
*2. For details, refer to Fig. 2.
*3. When the P72 or P96 model of indoor units are connected to the system, the maximum distance from the BC controller to the farthest indoor unit (indicated as "D + E + i" in the figure is 40 meters [131 feet].)
*4. Distance of Indoor sized P72, P96 from BC must be less than 10 m [32 ft], if any.
*5. Distance of Indoor sized P72, P96 from IU must be less than 20 m [65 ft], if any.
*6. When using 2 or more Sub BC controllers, max. height "h3" should be considered.
*7. 110 m [370 ft] is available depending on the model and installation conditions. For more detailed information, contact your local distributor.
*8. 60 m [197 ft] is available depending on the model and installation conditions. For more detailed information, contact your local distributor.
*9. When the piping length or the vertical separation exceeds the limit specified in Fig. 2, connect a sub BC to the system.
The restriction for a system with a sub BC connection is shown in Fig. 3.
When a given system configuration falls within the shaded area in Fig. 3, increase the size of the high-pressure pipe and the liquid pipe between the main BC and sub BC by one size.
When using P12, P15, P18, P36, or P48 model of indoor units, increase the size of the liquid branch pipe between the sub BC and indoor unit by one size.
When using indoor models P54 or larger, the restrictions shown in Fig. 2 cannot be exceeded.
*10. When the high pressure piping length is 65 m [213 ft] or less, use ø22.2 (ø7/8) pipe.
When the high pressure piping length exceeds 65 m [213 ft], use ø22.2 (ø7/8) pipe until 65 m [213 ft], use ø28.58 (ø1-1/8) pipe for the part that exceeds 65 m [213 ft].
*11. Total length of high-pressure pipes and liquid pipes

Bent equivalent length

Outdoor Model	M(m/bent [ft./bent])
(E)P192T/YSNU	0.50 [1.64']
P216T/YSNU	0.50 [1.64']
EP216T/YSNU	0.70 [2.30']
(E)P240T/YSNU	0.70 [2.30']
(E)P264T/YSNU	0.70 [2.30']
(E)P288T/YSNU	0.70 [2.30']
(E)P312T/YSNU	0.80 [2.63']
(E)P336T/YSNU	0.80 [2.63']
EP384T/YSNU	0.80 [2.63']
EP432T/YSNU	0.80 [2.63']

Piping length and height between IU and BC controller

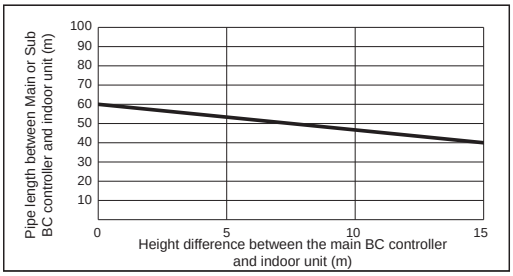

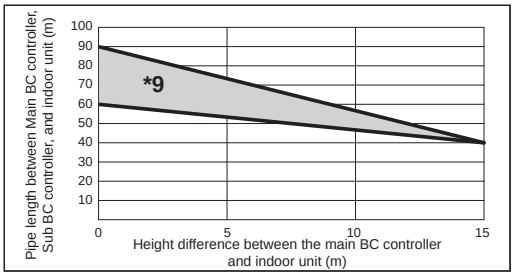

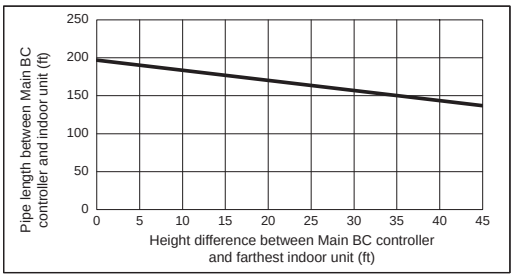

Fig. 2

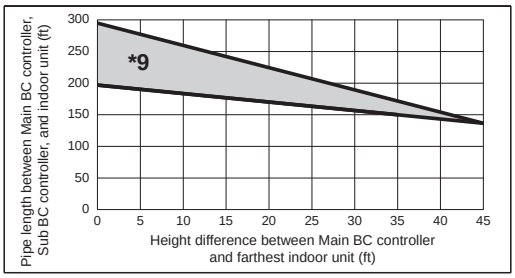

Fig. 3

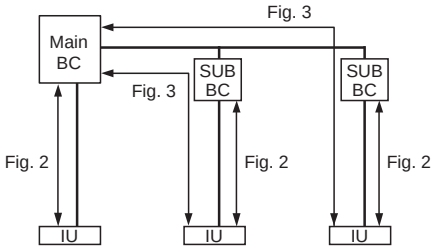

*9. When the piping length or the vertical separation exceeds the limit specified in Fig. 2, connect a sub BC to the system.
The restriction for a system with a sub BC connection is shown in Fig. 3.
When a given system configuration falls within the shaded area in Fig. 3, increase the size of the high-pressure pipe and the liquid pipe between the main BC and sub BC by one size.
The maximum liquid branch pipe diameter is ø19.05. If a given system already has a ø19.05-pipe between the main BC and sub BC, there is no need to increase the pipe size.
When using P12, P15, P18, P36, or P48 model of indoor units, increase the size of the liquid branch pipe between the sub BC and indoor unit by one size.
When using indoor models P54 or larger, the restrictions shown in Fig. 2 cannot be exceeded.

Piping "A"size selection rule **(mm [in.])**

Outdoor Model	Pipe(High pressure)	Pipe(Low pressure)
(E)P192T/YSNU	ø22.20 [7/8"]	ø28.58 [1-1/8"]
P216T/YSNU	ø22.20 [7/8"] *10	ø28.58 [1-1/8"]
EP216T/YSNU	ø22.20 [7/8"] *10	ø34.93 [1-3/8"]
(E)P240T/YSNU	ø22.20 [7/8"] *10	ø34.93 [1-3/8"]
(E)P264T/YSNU	ø28.58 [1-1/8"]	ø34.93 [1-3/8"]
(E)P288T/YSNU	ø28.58 [1-1/8"]	ø34.93 [1-3/8"]
(E)P312T/YSNU	ø28.58 [1-1/8"]	ø41.28 [1-5/8"]
(E)P336T/YSNU	ø28.58 [1-1/8"]	ø41.28 [1-5/8"]
EP384T/YSNU	ø28.58 [1-1/8"]	ø41.28 [1-5/8"]
EP432T/YSNU	ø28.58 [1-1/8"]	ø41.28 [1-5/8"]

Piping "L", "M" size selection rule **(mm [in.])**

Outdoor Model	Pipe(High pressure)	Pipe(Low pressure)
(E)P72T/YNU	ø15.88 [5/8"]	ø19.05 [3/4"]
(E)P96T/YNU	ø19.05 [3/4"]	ø22.20 [7/8"]
(E)P120T/YNU	ø19.05 [3/4"]	ø28.58 [1-1/8"]
(E)P144T/YNU	ø22.20 [7/8"]	ø28.58 [1-1/8"]
(E)P168T/YNU	ø22.20 [7/8"]	ø28.58 [1-1/8"]
EP192T/YNU	ø22.20 [7/8"]	ø28.58 [1-1/8"]
EP216T/YNU	ø22.20 [7/8"]	ø28.58 [1-1/8"]
EP240T/YNU	ø22.20 [7/8"]	ø28.58 [1-1/8"]

Piping "B", "C", "D", "E" size seleciton rule **(mm [in.])**

Total down-stream Indoor capacity	Pipe(Liquid)	Pipe(Gas)
P54 or less	ø9.52 [3/8"]	ø15.88 [5/8"]
P55-P72	ø9.52 [3/8"]	ø19.05 [3/4"]
P73-P96	ø9.52 [3/8"]	ø22.20 [7/8"]

Piping "a", "b", "c", "d", "e", "f", "g", "i", "j", "k", "m", "n" size selection rule **(mm [in.])**

Indoor Unit size	Pipe(Liquid)	Pipe(Gas)
P04-P18	ø6.35 [1/4"]	ø12.70 [1/2"]
P24-P54	ø9.52 [3/8"]	ø15.88 [5/8"]
P72	ø9.52 [3/8"]	ø19.05 [3/4"]
P96	ø9.52 [3/8"]	ø22.20 [7/8"]

Piping "F", "G", "J", "K" size selection rule **(mm [in.])**

Total down-stream Indoor capacity	Pipe(Liquid)	Pipe(HP Gas)	Pipe(LP Gas)
P72 or less	ø9.52 [3/8"]	ø15.88 [5/8"]	ø19.05 [3/4"]
P73 to P108	ø9.52 [3/8"]	ø19.05 [3/4"]	ø22.20 [7/8"]
P109 to P126	ø12.70 [1/2"]	ø19.05 [3/4"]	ø28.58 [1-1/8"]
P127 to P144	ø12.70 [1/2"]	ø22.20 [7/8"]	ø28.58 [1-1/8"]
P145 to P216	ø15.88 [5/8"]	ø22.20 [7/8"]	ø28.58 [1-1/8"]
P217 to P234	ø15.88 [5/8"]	ø28.58 [1-1/8"]	ø28.58 [1-1/8"]
P235 to P288	ø19.05 [3/4"]	ø28.58 [1-1/8"]	ø34.93 [1-3/8"]
P289 or above	ø19.05 [3/4"]	ø28.58 [1-1/8"]	ø41.28 [1-5/8"]

HP: High pressure, LP: Low pressure

Selection criteria for joints_A

Total down-stream Indoor capacity	Joint
-P72	CMY-Y102SS-G2
P73-P96	CMY-Y102LS-G2

Selection criteria for joints_B

Total down-stream Indoor capacity	Joint
-P120	CMY-R201S-G
P121-P216	CMY-R202S-G
P217-P234	CMY-R203S-G
P235-P360	CMY-R204S-G
P361-	CMY-R205S-G

Total piping length restrictions(m)

[PURY-(E)P72, 96TNU-A/A1, PURY-(E)P72, 96YNU-A/A1]

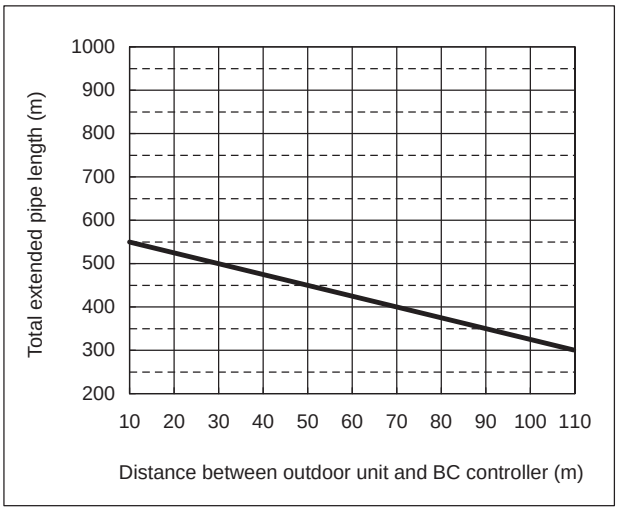

[PURY-(E)P192TSNU-A/A1, PURY-(E)P192YSNU-A/A1]

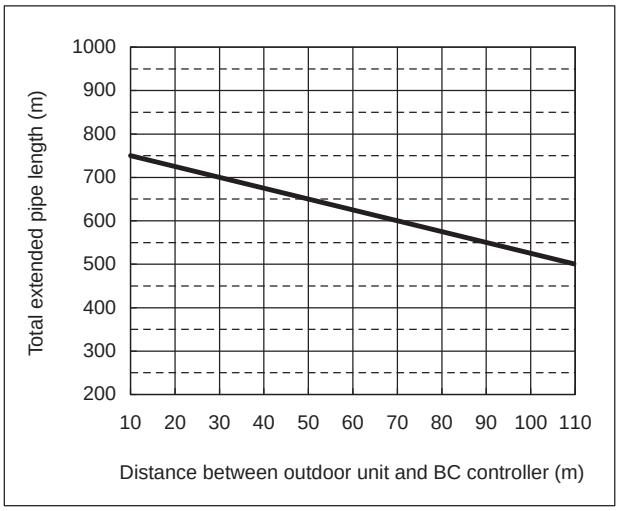

[PURY-(E)P120, 144, 168TNU-A/A1, PURY-(E)P120, 144, 168YNU-A/A1]

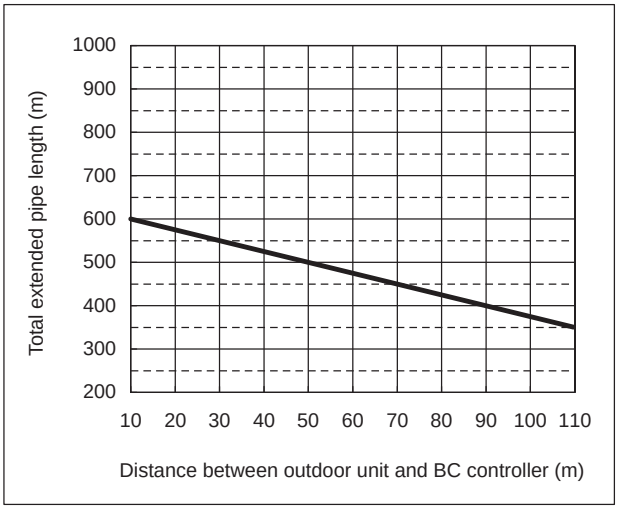

[PURY-(E)P216, 240TSNU-A/A1, PURY-(E)P216, 240YSNU-A/A1]

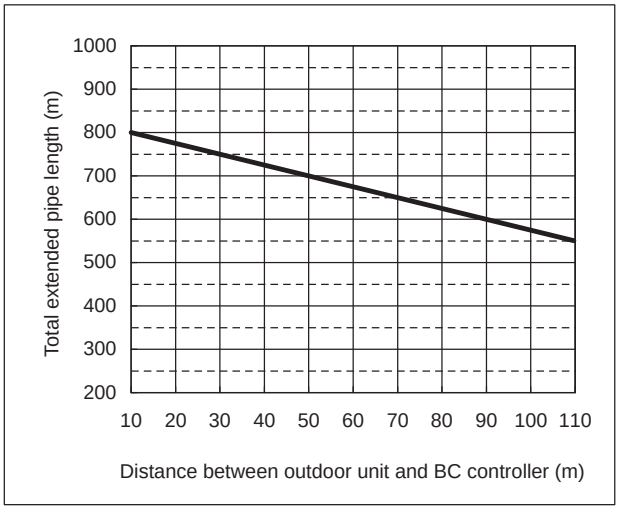

[PURY-EP192, 216, 240TNU-A/A1, PURY-EP192, 216, 240YNU-A/A1]

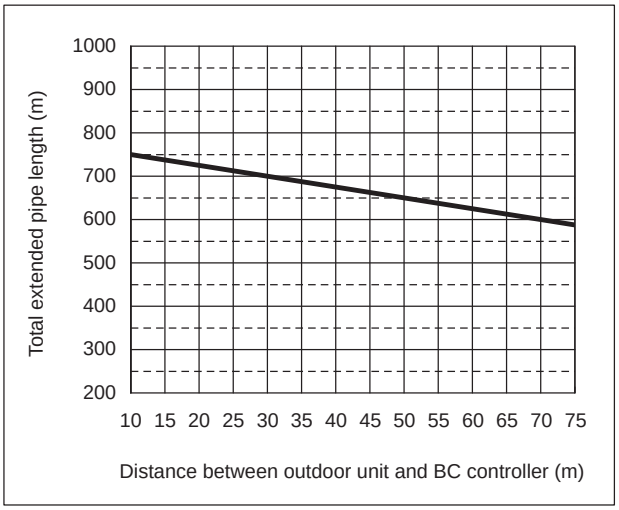

[PURY-(E)P264, 288, 312, 336TSNU-A/A1, PURY-(E)P264, 288, 312, 336YSNU-A/A1]

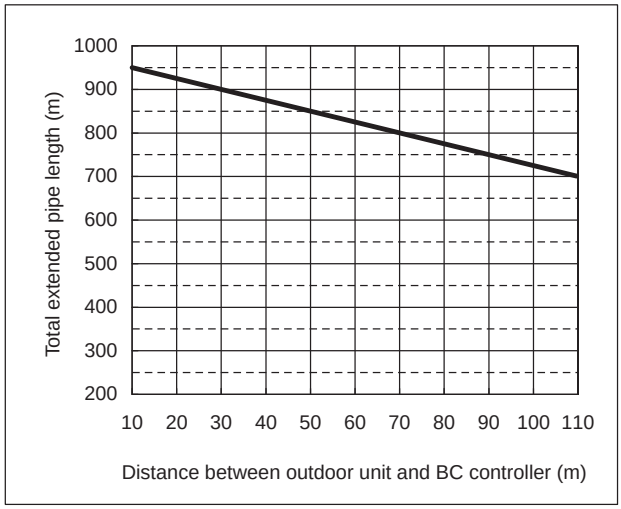

*110m is available depending on the model and installation condition.
For more detailed information, please contact your local distributor.

[PURY-EP384, 432TSNU-A/A1, PURY-EP384, 432YSNU-A/A1]

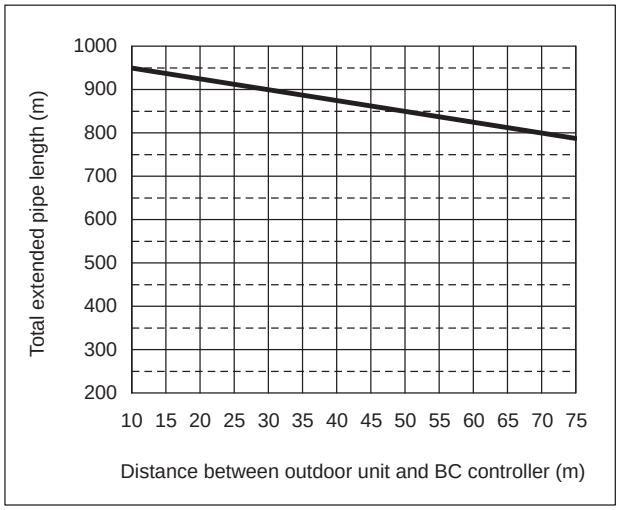

*110m is available depending on the model and installation condition.
For more detailed information, please contact your local distributor.

Total piping length restrictions(ft.)

[PURY-(E)P72, 96TNU-A/A1, PURY-(E)P72, 96YNU-A/A1]

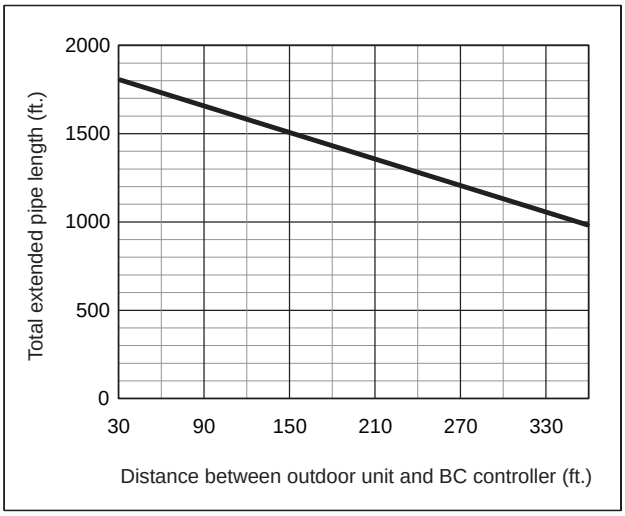

[PURY-(E)P192TSNU-A/A1, PURY-(E)P192YSNU-A/A1]

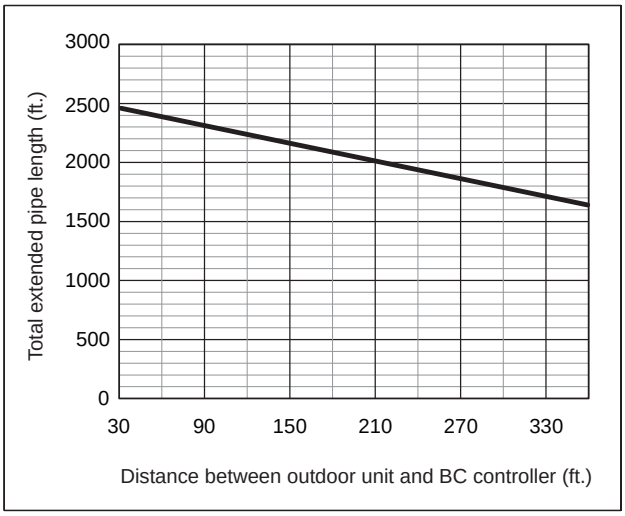

[PURY-(E)P120, 144, 168TNU-A/A1, PURY-(E)P120, 144, 168YNU-A/A1]

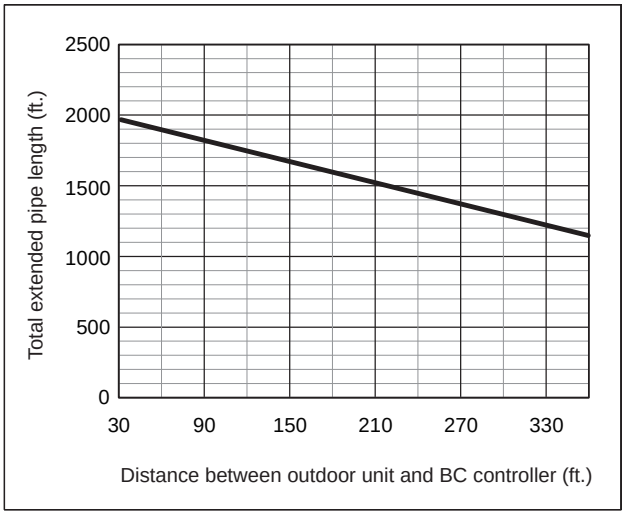

[PURY-(E)P216, 240TSNU-A/A1, PURY-(E)P216, 240YSNU-A/A1]

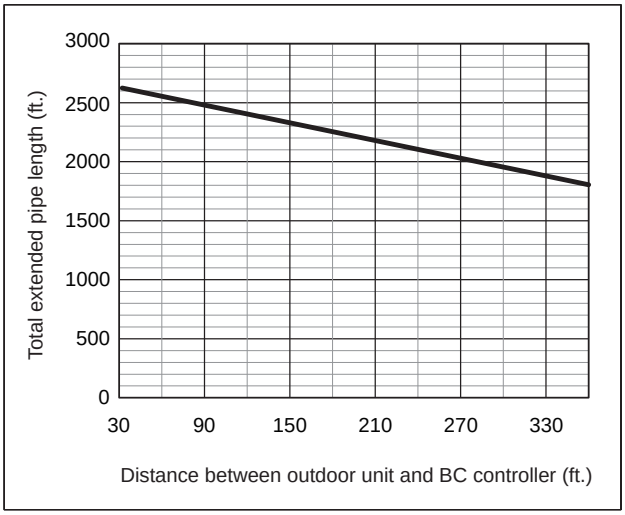

[PURY-EP192, 216, 240TNU-A/A1, PURY-EP192, 216, 240YNU-A/A1]

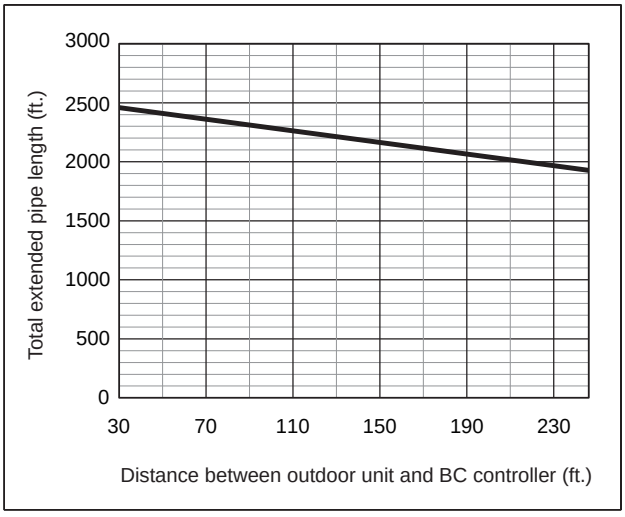

[PURY-(E)P264, 288, 312, 336TSNU-A/A1, PURY-(E)P264, 288, 312, 336YSNU-A/A1]

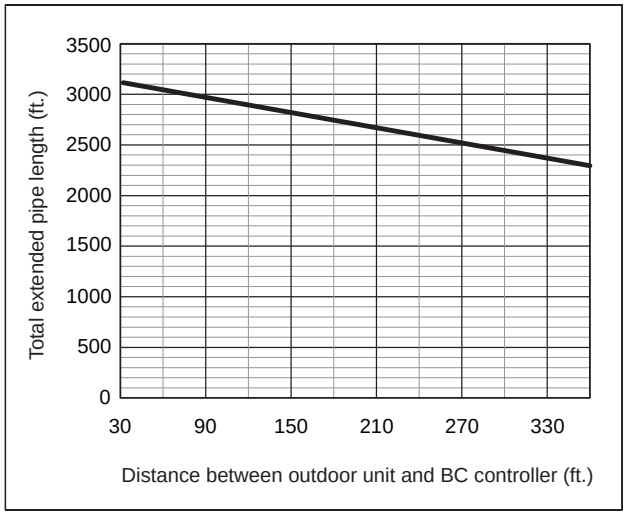

*360 ft. is available depending on the model and installation condition.
For more detailed information, please contact your local distributor.

[PURY-EP384, 432TSNU-A/A1, PURY-EP384, 432YSNU-A/A1]

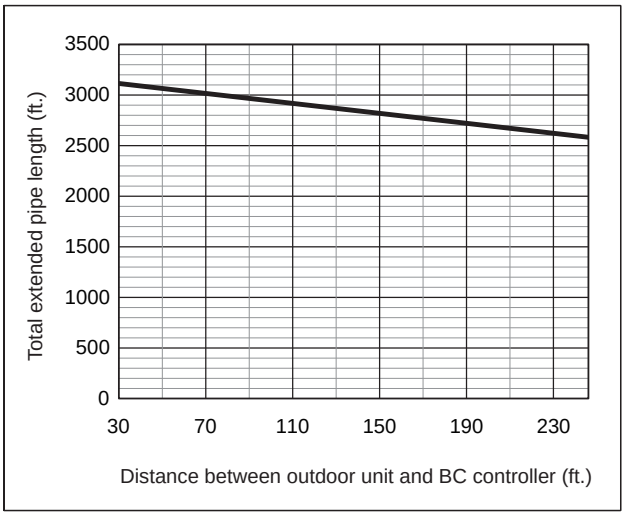

*360 ft. is available depending on the model and installation condition.
For more detailed information, please contact your local distributor.

2-10-2 Restrictions on Refrigerant Pipe Size

(1) Between outdoor unit and BC controller (Part A)

Unit : mm [inch]

<table>
<tr><th>Outdoor units</th><th>High-pressure pipe</th><th>Low-pressure pipe</th></tr>
<tr><td>(E)P72</td><td>ø15.88 [5/8"]</td><td>ø19.05 [3/4"]</td></tr>
<tr><td>(E)P96</td><td rowspan="2">ø19.05 [3/4"]</td><td>ø22.2 [7/8"]</td></tr>
<tr><td>(E)P120</td><td rowspan="5">ø28.58 [1-1/8"]</td></tr>
<tr><td>(E)P144</td><td rowspan="3">ø22.2 [7/8"]</td></tr>
<tr><td>(E)P168</td></tr>
<tr><td>(E)P192</td></tr>
<tr><td>P216</td><td rowspan="3">ø22.2 [7/8"] *1</td></tr>
<tr><td>EP216</td><td rowspan="3">ø34.93 [1-3/8"]</td></tr>
<tr><td>(E)P240</td></tr>
<tr><td>(E)P264</td><td rowspan="5">ø28.58 [1-1/8"]</td></tr>
<tr><td>(E)P288</td></tr>
<tr><td>(E)P312</td><td rowspan="4">ø41.28 [1-5/8"]</td></tr>
<tr><td>(E)P336</td></tr>
<tr><td>EP384</td></tr>
<tr><td>EP432</td></tr>
</table>

*1 When the high pressure pipe exceeds 65 meters [213 feet], the pipe diameter of the section exceeding 65 meters [213 feet] should be 28.58 [1-1/8"].

(2) Between BC controller and indoor units (Sections a, b, c, d, e, f, g, i, j, k, m, and n)

Unit : mm [inch]

Indoor unit	Liquid pipe	Gas pipe
P04 - P18	ø6.35 [1/4"]	ø12.7 [1/2"]
P24 - P54	ø9.52 [3/8"]	ø15.88 [5/8"]
P72	ø9.52 [3/8"]	ø19.05 [3/4"]
P96	ø9.52 [3/8"]	ø22.2 [7/8"]

(3) Between the main and sub BC controllers (Sections F, G, J, and K)

Unit : mm [inch]

<table>
<tr><th>Total capacity of downstream indoor units</th><th>High-pressure gas pipe</th><th>Low-pressure gas pipe</th><th>Liquid pipe</th></tr>
<tr><td>- P72</td><td>ø15.88 [5/8"]</td><td>ø19.05 [3/4"]</td><td rowspan="2">ø9.52 [3/8"]</td></tr>
<tr><td>P73 - P108</td><td rowspan="2">ø19.05 [3/4"]</td><td>ø22.2 [7/8"]</td></tr>
<tr><td>P109 - P126</td><td rowspan="4">ø28.58 [1-1/8"]</td><td rowspan="2">ø12.7 [1/2"]</td></tr>
<tr><td>P127 - P144</td><td rowspan="2">ø22.2 [7/8"]</td></tr>
<tr><td>P145 - P216</td><td rowspan="2">ø15.88 [5/8"]</td></tr>
<tr><td>P217 - P234</td><td rowspan="3">ø28.58 [1-1/8"]</td></tr>
<tr><td>P235 - P288</td><td>ø34.93 [1-3/8"]</td><td rowspan="2">ø19.05 [3/4"]</td></tr>
<tr><td>P289 -</td><td>ø41.28[1-5/8"]</td></tr>
</table>

2-10-3 BC Controller Connection Method

(1) Size of the pipe that fits the standard BC controller ports

(E)P72 - (E)P120 models

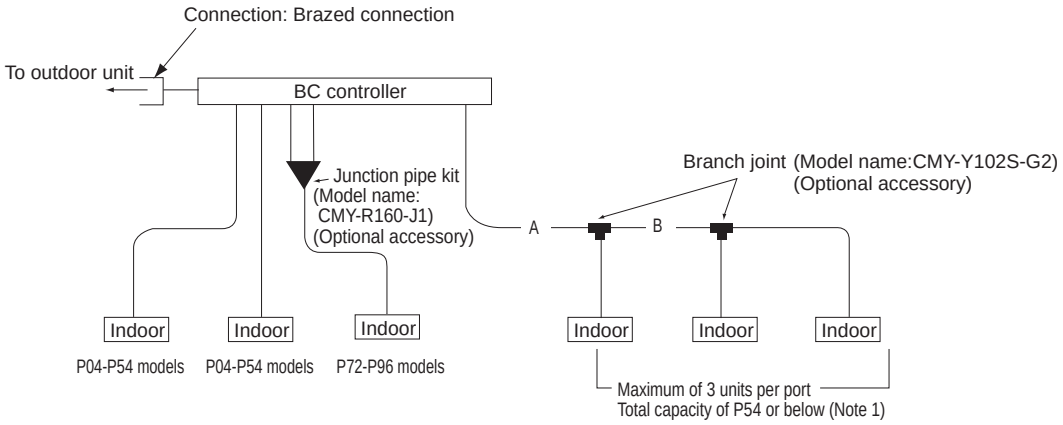

Note 1 Do not connect multiple indoor units to the same port when operating each of them in different mode (cooling, heating, stop, and thermo-off).
The indoor units connected to the same port must be set to operate in the same mode. Set them in the same group to make them run/stop in the same mode all together. For other options, enable the thermo setting on the remote controller, or set the common thermostat (optional) to run/stop the units in the same mode based on a representative temperature.

The ports of the BC controller accommodates the pipes on P24-P54 models of indoor units.To connect other types of indoor units, follow the procedure below.

Unit : mm [inch]

Operation		Pipe sections	
		High-pressure side (liquid)	Low-pressure side (gas)
Outdoor unit side	(E)P72	ø15.88 [5/8"] (Brazed connection)	ø19.05 [3/4"] (Brazed connection)
	(E)P96	ø19.05 [3/4"] (Brazed connection)	ø22.2 [7/8"] (Brazed connection)
	(E)P120	ø19.05 [3/4"] (Brazed connection)	ø28.58 [1-1/8"] (Brazed connection)
Indoor unit side		ø9.52 [3/8"] (Brazed connection)	ø15.88 [5/8"] (Brazed connection)

* BC controllers can only be connected to (E)P72 - (E)P120 models of outdoor units.

Note

1)

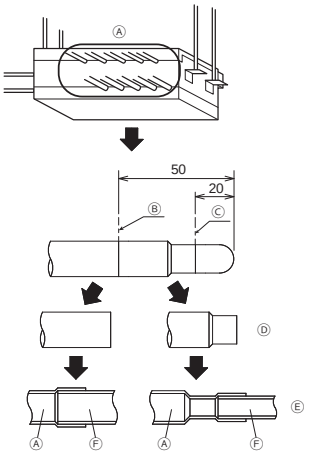

Be sure to have pipe expansion of indoor unit connecting port by cutting the piping at the cutting point which depends on the indoor unit capacity.

Ⓐ Indoor unit connecting port

Ⓑ Cutting point : ø9.52 (Liquid side) or ø15.88 (Gas side)
(Indoor unit model : bigger than P18)

Ⓒ Cutting point : ø6.35 (Liquid side) or ø12.7 (Gas side)
(Indoor unit model : P18 or smaller)

Ⓓ Cut the piping at the cutting point

Ⓔ Have pipe expansion of indoor unit connecting port

Ⓕ Field pipe

Note:
Remove burr after cutting the piping to prevent entering the piping.
Check that there is no crack at the pipe expansion part.

Note

2) To connect P72 - P96 models of indoor units (or when the total capacity of indoor units exceeds P55), use a junction pipe kit and merge the two nozzles.

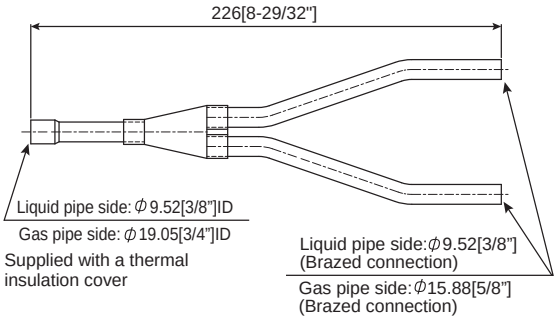

Note

3) To connect multiple indoor units to a port (or to a junction pipe)
- Maximum total capacity of connected indoor units: P54 or below (in a system with a junction pipe: P96 or below)
- Maximum number of connectable indoor units: 3 units
- Branch joint: Use CMY-Y102SS-G2, CMY-Y102LS-G2 (optional accessory).
- (1) Size of the pipe that fits the standard BC controller ports (A, B): Select the proper size pipes based on the total capacity of the downstream indoor units, using the table below as a reference.

Unit : mm [inch]

Total capacity of indoor units	Liquid pipe	Gas pipe
P54 or below	ø9.52 [3/8"]	ø15.88 [5/8"]
P55 - P72	ø9.52 [3/8"]	ø19.05 [3/4"]
P73 - P96	ø9.52 [3/8"]	ø22.2 [7/8"]

(2) Size of the pipe that fits the main BC controller ports

(E)P72 - (E)P432 models

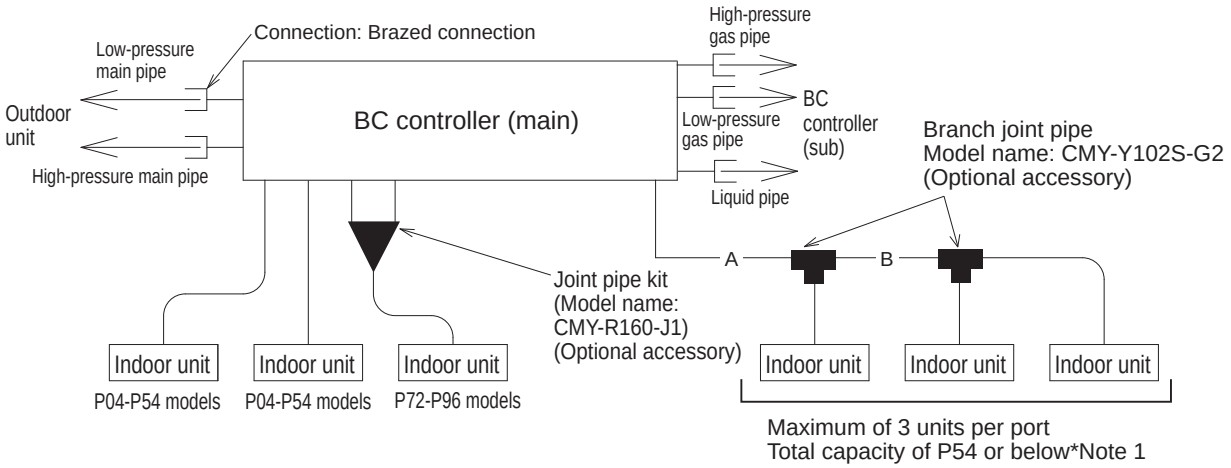

*Note 1 Do not connect multiple indoor units to the same port when operating each of them in different mode (cooling, heating, stop, and thermo-off).
The indoor units connected to the same port must be set to operate in the same mode. Set them in the same group to make them run/stop in the same mode all together. For other options, enable the thermo setting on the remote controller, or set the common thermostat (optional) to run/stop the units in the same mode based on a representative temperature.

- Restriction on installing the branch joint between Main BC and Sub BC on the high-pressure piping, low-pressure piping, and liquid piping.

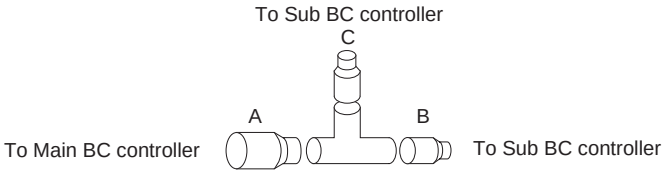

- Regarding the branch joint between Main BC and Sub BC on the high-pressure/low-pressure/liquid piping, A and B must be installed horizontally, and C must be installed upward higher than the horizontal plane of A and B.

The ports of the BC controller accommodates the pipes on P24-P54 models of indoor units. To connect other types of indoor units, follow the procedure below.

Note

1)

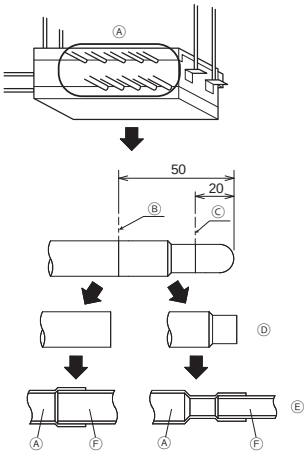

Be sure to have pipe expansion of indoor unit connecting port by cutting the piping at the cutting point which depends on the indoor unit capacity.

Ⓐ Indoor unit connecting port

Ⓑ Cutting point : ø9.52 (Liquid side) or ø15.88 (Gas side)
(Indoor unit model : bigger than P18)

Ⓒ Cutting point : ø6.35 (Liquid side) or ø12.7 (Gas side)
(Indoor unit model : P18 or smaller)

Ⓓ Cut the piping at the cutting point

Ⓔ Have pipe expansion of indoor unit connecting port

Ⓕ Field pipe

Note:
Remove burr after cutting the piping to prevent entering the piping.
Check that there is no crack at the pipe expansion part.

Note

2) To connect P72 - P96 models of indoor units (or when the total capacity of indoor units exceeds P55), use a junction pipe kit and merge the two nozzles.

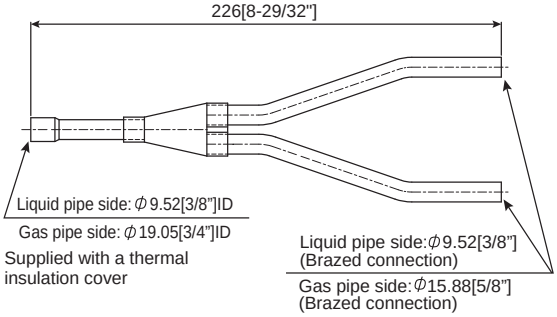

Note

3) To connect multiple indoor units to a port (or to a junction pipe)
- Maximum total capacity of connected indoor units: P54 or below (in a system with a junction pipe: P96 or below)
- Maximum number of connectable indoor units: 3 units
- Branch joint: Use CMY-Y102SS-G2, CMY-Y102LS-G2 (optional accessory).
- (2) Size of the pipe that fits the main BC controller ports (A, B): Select the proper size pipes based on the total capacity of the downstream indoor units, using the table below as a reference.

Unit : mm [inch]

Total capacity of indoor units	Liquid pipe	Gas pipe
P54 or below	ø9.52 [3/8"]	ø15.88 [5/8"]
P55 - P72	ø9.52 [3/8"]	ø19.05 [3/4"]
P73 - P96	ø9.52 [3/8"]	ø22.2 [7/8"]

Unit : mm [inch]

<table>
<tr><th colspan="2">Outdoor units</th><th>High-pressure pipe</th><th>Low-pressure pipe</th></tr>
<tr><td rowspan="15">Outdoor unit side</td><td>(E)P72</td><td>ø15.88 [5/8"] (Brazed connection)</td><td>ø19.05 [3/4"] (Brazed connection)</td></tr>
<tr><td>(E)P96</td><td rowspan="2">ø19.05 [3/4"] (Brazed connection)</td><td>ø22.2 [7/8"] (Brazed connection)</td></tr>
<tr><td>(E)P120</td><td rowspan="5">ø28.58 [1-1/8"] (Brazed connection)</td></tr>
<tr><td>(E)P144</td><td rowspan="3">ø22.2 [7/8"] (Brazed connection)</td></tr>
<tr><td>(E)P168</td></tr>
<tr><td>(E)P192</td></tr>
<tr><td>P216</td><td rowspan="3">ø22.2 [7/8"]*1 (Brazed connection)</td></tr>
<tr><td>EP216</td><td rowspan="4">ø34.93 [1-3/8"] (Brazed connection)</td></tr>
<tr><td>(E)P240</td></tr>
<tr><td>(E)P264</td><td rowspan="6">ø28.58 [1-1/8"] (Brazed connection)</td></tr>
<tr><td>(E)P288</td></tr>
<tr><td>(E)P312</td><td rowspan="4">ø41.28 [1-5/8"] (Brazed connection)</td></tr>
<tr><td>(E)P336</td></tr>
<tr><td>EP384</td></tr>
<tr><td>EP432</td></tr>
<tr><td colspan="2">Indoor unit side</td><td>ø9.52 [3/8"] (Brazed connection)</td><td>ø15.88 [5/8"] (Brazed connection)</td></tr>
</table>

*1 When the high pressure pipe exceeds 65 meters [213 feet], the pipe diameter of the section exceeding 65 meters [213 feet] should be 28.58 [1-1/8"].

(3) Size of the pipe that fits the sub BC controller ports

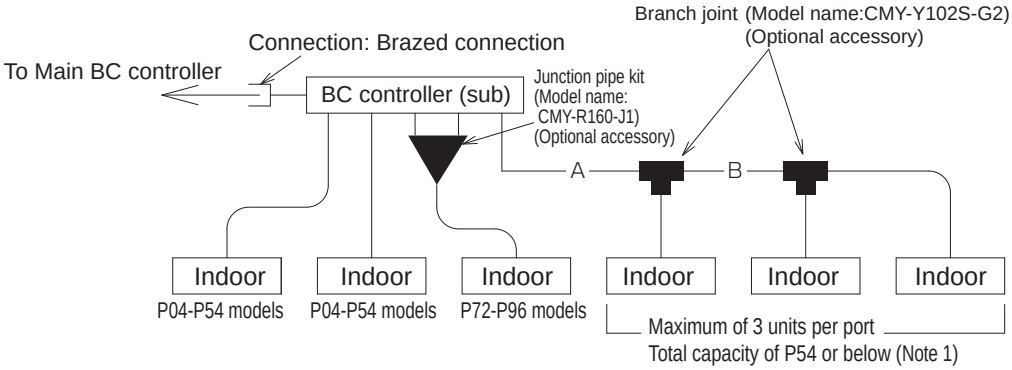

Note 1 Do not connect multiple indoor units to the same port when operating each of them in different mode (cooling, heating, stop, and thermo-off).
The indoor units connected to the same port must be set to operate in the same mode. Set them in the same group to make them run/stop in the same mode all together. For other options, enable the thermo setting on the remote controller, or set the common thermostat (optional) to run/stop the units in the same mode based on a representative temperature.

The ports of the BC controller accommodates the pipes on P24-P54 models of indoor units. To connect other types of indoor units, follow the procedure below.

Note

1)

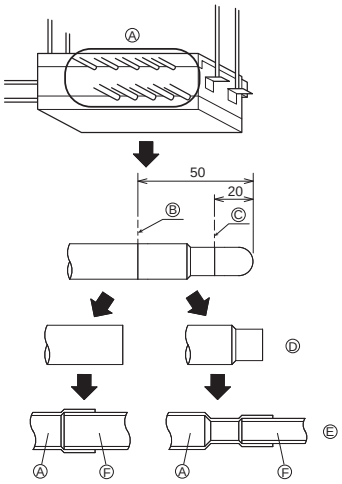

Be sure to have pipe expansion of indoor unit connecting port by cutting the piping at the cutting point which depends on the indoor unit capacity.

Ⓐ Indoor unit connecting port

Ⓑ Cutting point : ø9.52 (Liquid side) or ø15.88 (Gas side)
(Indoor unit model : bigger than P18)

Ⓒ Cutting point : ø6.35 (Liquid side) or ø12.7 (Gas side)
(Indoor unit model : P18 or smaller)

Ⓓ Cut the piping at the cutting point

Ⓔ Have pipe expansion of indoor unit connecting port

Ⓕ Field pipe

Note:
Remove burr after cutting the piping to prevent entering the piping.
Check that there is no crack at the pipe expansion part.

Note

2) To connect P72 - P96 models of indoor units (or when the total capacity of indoor units exceeds P55), use a junction pipe kit and merge the two nozzles.

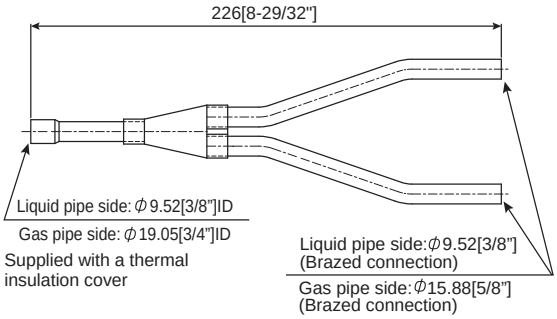

Note

3) To connect multiple indoor units to a port (or to a junction pipe)
- Maximum total capacity of connected indoor units: P54 or below (in a system with a junction pipe: P96 or below)
- Maximum number of connectable indoor units: 3 units
- Branch joint: Use CMY-Y102SS-G2, CMY-Y102LS-G2 (optional accessory).
- (3) Size of the pipe that fits the sub BC controller ports (A, B): Select the proper size pipes based on the total capacity of the downstream indoor units, using the table below as a reference.

Unit : mm [inch]

Total capacity of indoor units	Liquid pipe	Gas pipe
P54 or below	ø9.52 [3/8"]	ø15.88 [5/8"]
P55 - P72	ø9.52 [3/8"]	ø19.05 [3/4"]
P73 - P96	ø9.52 [3/8"]	ø22.2 [7/8"]

Unit : mm [inch]

<table>
<tr><th colspan="2">Operation</th><th colspan="3">Pipe sections</th></tr>
<tr><th></th><th>Total capacity of indoor units connected to down-stream BC controller</th><th>High-pressure side (gas)</th><th>Low-pressure side (gas)</th><th>Liquid pipe side</th></tr>
<tr><td rowspan="8">Main BC controller side</td><td>- P72</td><td>ø15.88 [5/8"] (Brazed connection)</td><td>ø19.05 [3/4"] (Brazed connection)</td><td rowspan="2">ø9.52 [3/8"] (Brazed connection)</td></tr>
<tr><td>P73 - P108</td><td rowspan="2">ø19.05 [3/4"] (Brazed connection)</td><td>ø22.2 [7/8"] (Brazed connection)</td></tr>
<tr><td>P109 - P126</td><td rowspan="4">ø28.58 [1-1/8"] (Brazed connection)</td><td rowspan="2">ø12.7 [1/2"] (Brazed connection)</td></tr>
<tr><td>P127 - P144</td><td rowspan="2">ø22.2 [7/8"] (Brazed connection)</td></tr>
<tr><td>P145 - P216</td><td rowspan="2">ø15.88 [5/8"] (Brazed connection)</td></tr>
<tr><td>P217 - P234</td><td rowspan="3">ø28.58 [1-1/8"] (Brazed connection)</td></tr>
<tr><td>P235 - P288</td><td>ø34.93 [1-3/8"] (Brazed connection)</td><td rowspan="2">ø19.05 [3/4"] (Brazed connection)</td></tr>
<tr><td>P289 -</td><td>ø41.28 [1-5/8"] (Brazed connection)</td></tr>
</table>

2-10-4 Outdoor Twinning Kit

The following optional Outdoor Twinning Kit is needed to use to combine multiple refrigerant pipes. Refer to section "Piping Design" of the DATA BOOK for the details of selecting a proper twinning kit.

CMY-R200NCBK

Unit: mm (in.)

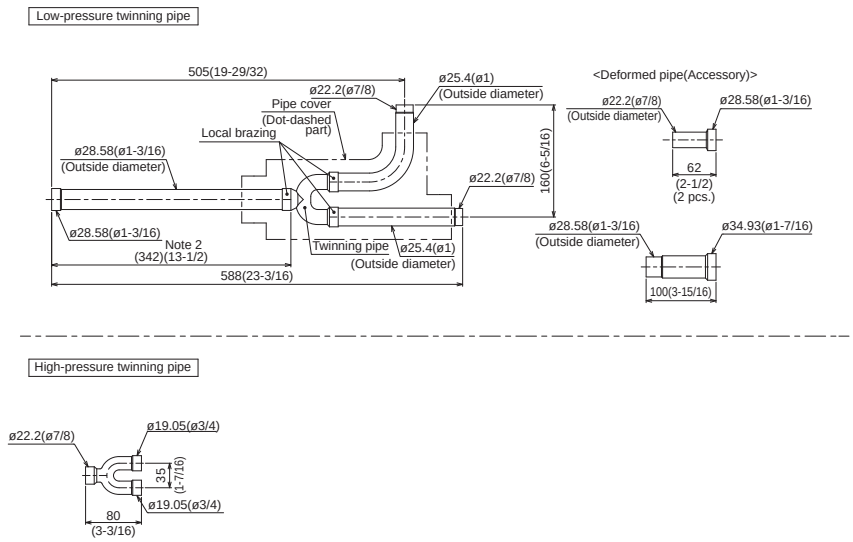

CMY-R300NCBK

Unit: mm (in.)

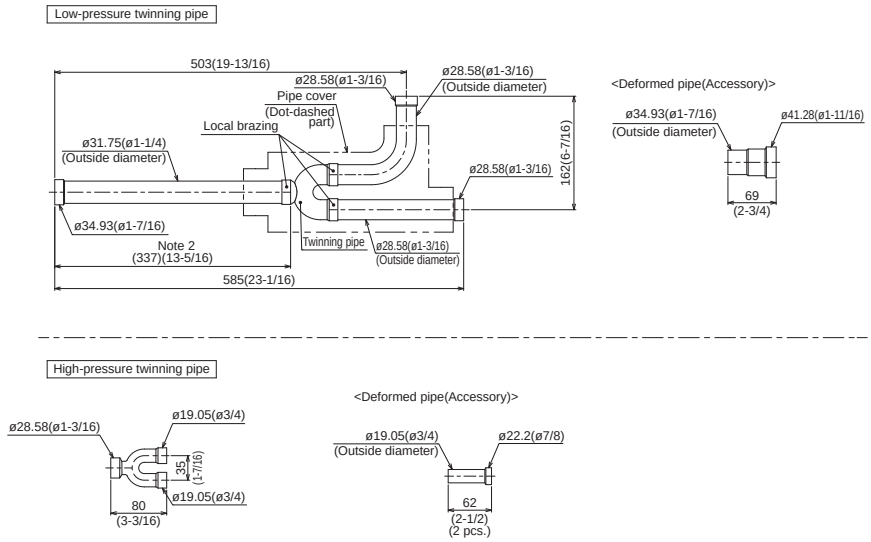

Note 1. Refer to the figure below for the installation position of the twinning pipe.
The Twinning pipe must be installed horizontally using a level vessel to avoid unit damage.

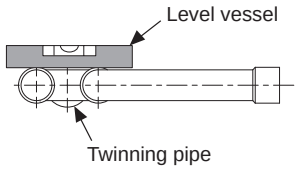

2. Use the attached pipe to braze the port-opening of the twinning pipe.
3. Pipe diameter is indicated by inside diameter.
4. Only use the twinning pipe by Mitsubishi (optional parts).

Chapter 3 Major Components, Their Functions and Refrigerant Circuits

3-1 External Appearance and Refrigerant Circuit Components of Outdoor Unit 1

3-1-1 External Appearance of Outdoor Unit 1

3-1-2 Outdoor Unit Refrigerant Circuits 5

3-2 Outdoor Unit Refrigerant Circuit Diagrams 14

3-3 Functions of the Major Components of Outdoor Unit 19

3-4 Functions of the Major Components of Indoor Unit 23

3-5 External Appearance and Refrigerant Circuit Components of BC Controller 24

3-6 BC Controller Refrigerant Circuit Diagrams 27

3-7 Functions of the Major Components of BC Controller 29

3-1 External Appearance and Refrigerant Circuit Components of Outdoor Unit

3-1-1 External Appearance of Outdoor Unit

(1) PURY-P72T(Y)NU-A/A1
PURY-EP72T(Y)NU-A/A1

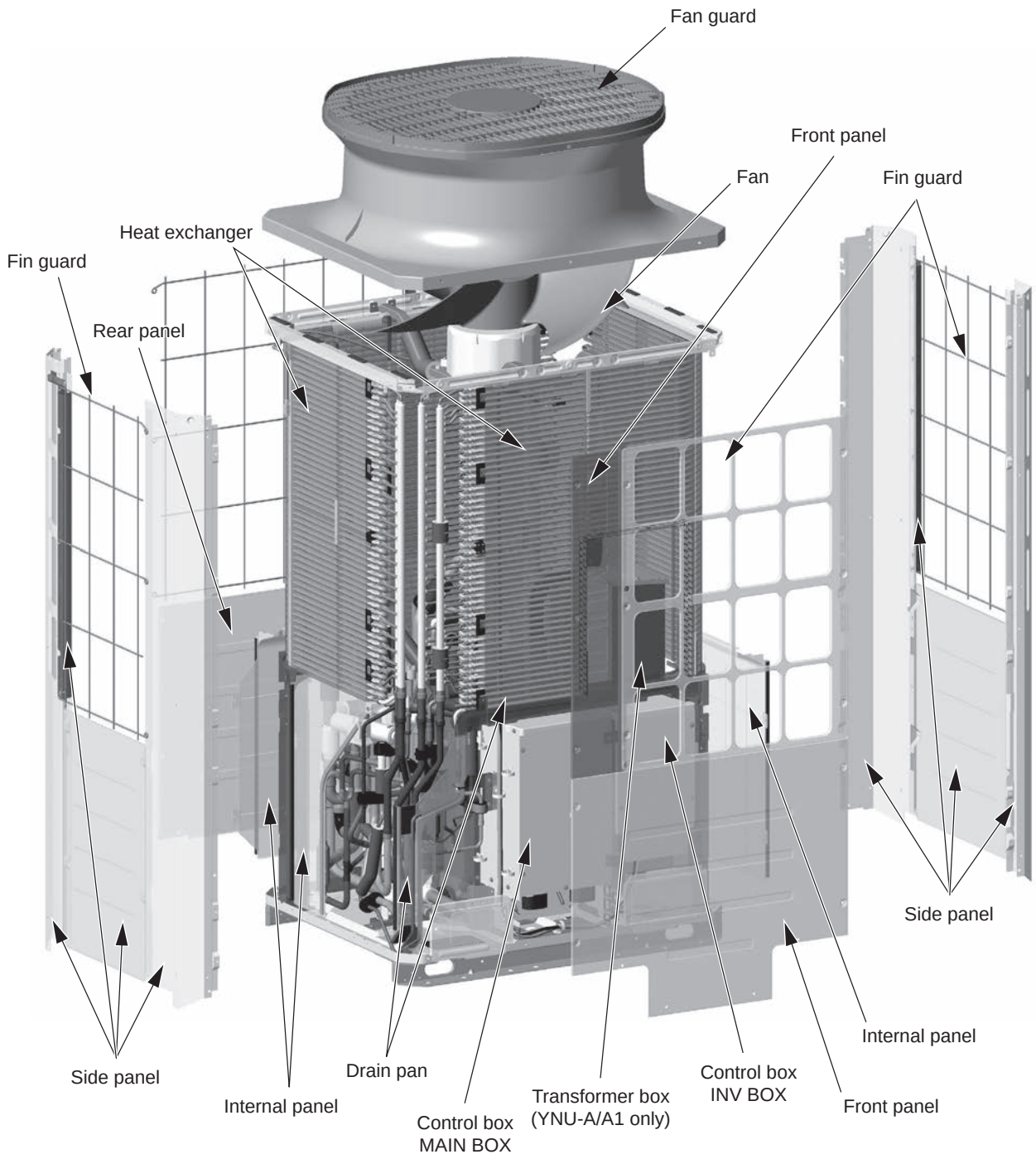

(2) PURY-P96, P120, P144T(Y)NU-A/A1
PURY-EP96, EP120, EP144T(Y)NU-A/A1

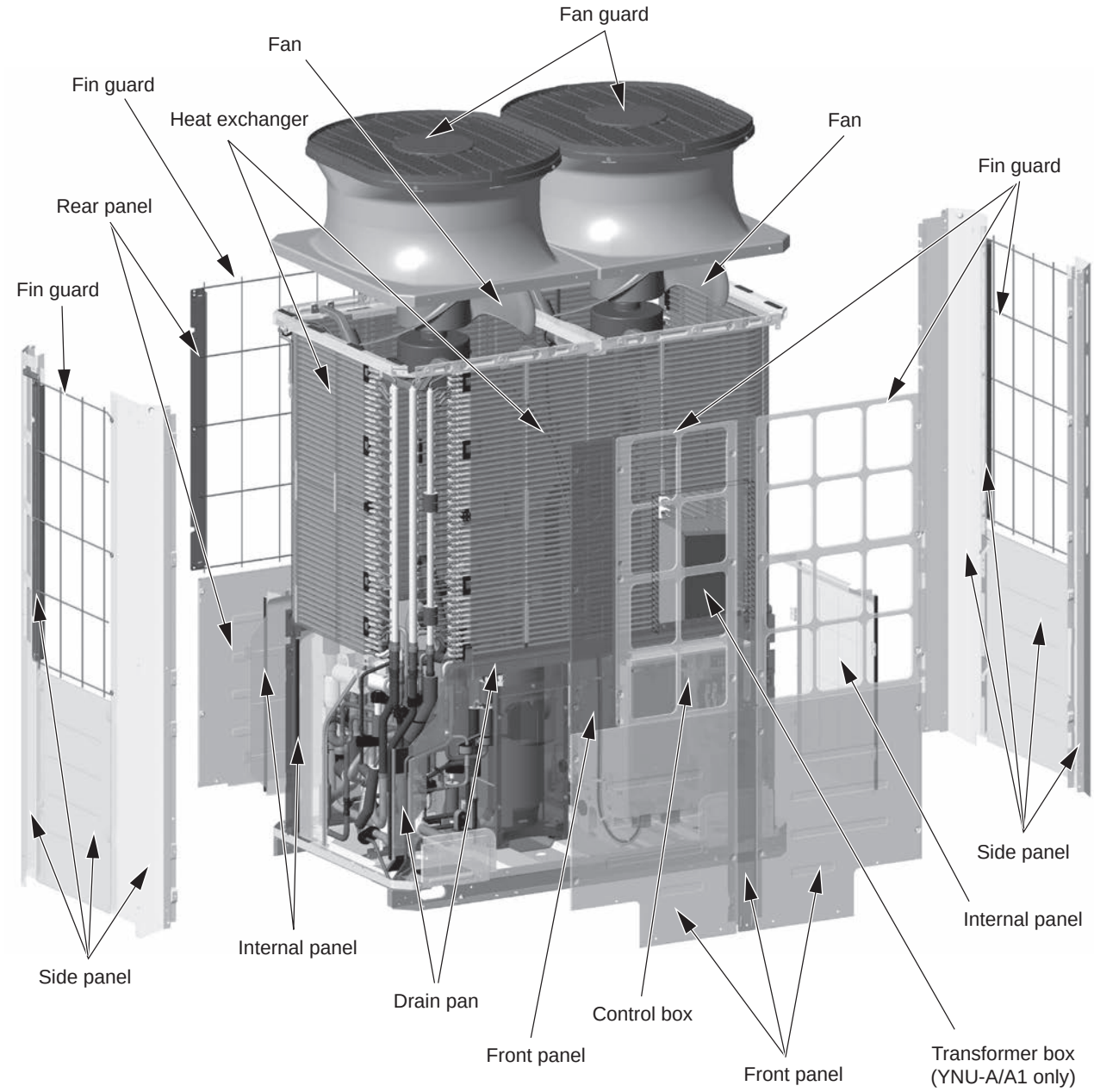

(3) PURY-P168T(Y)NU-A/A1
PURY-EP168T(Y)NU-A/A1

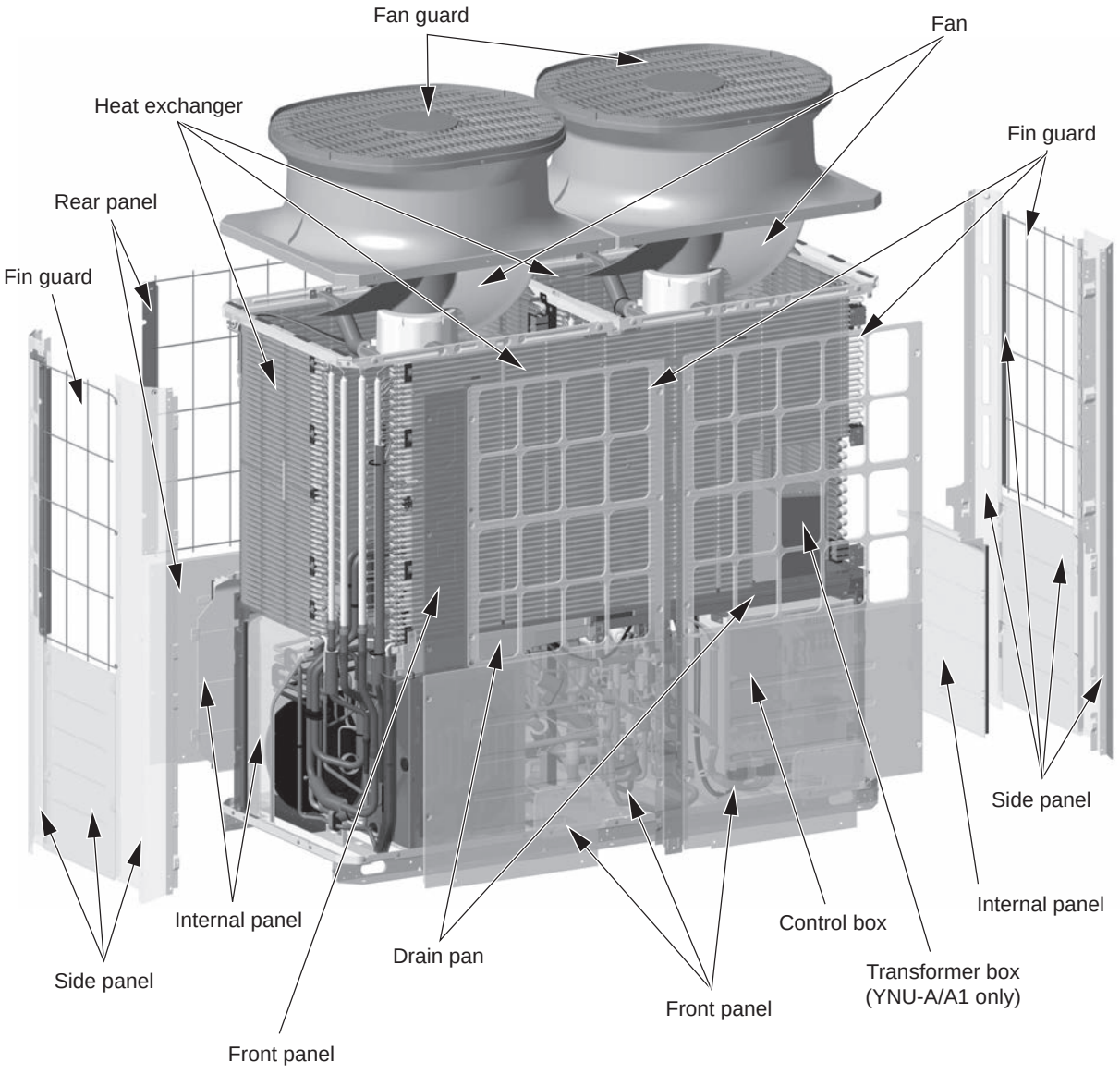

(4) PURY-EP192, EP216, EP240T(Y)NU-A/A1

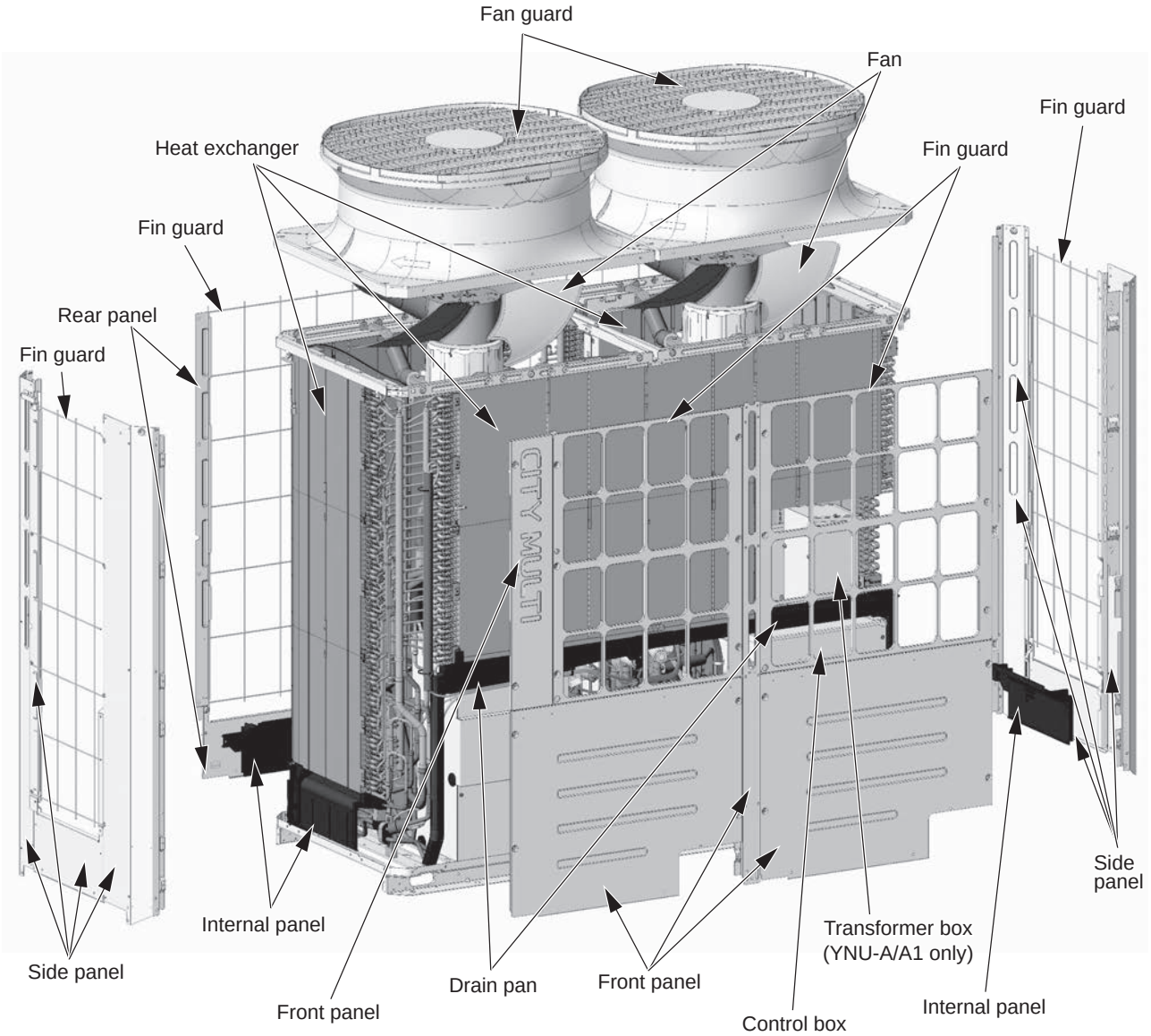

3-1-2 Outdoor Unit Refrigerant Circuits

(1) PURY-P72T(Y)NU-A/A1

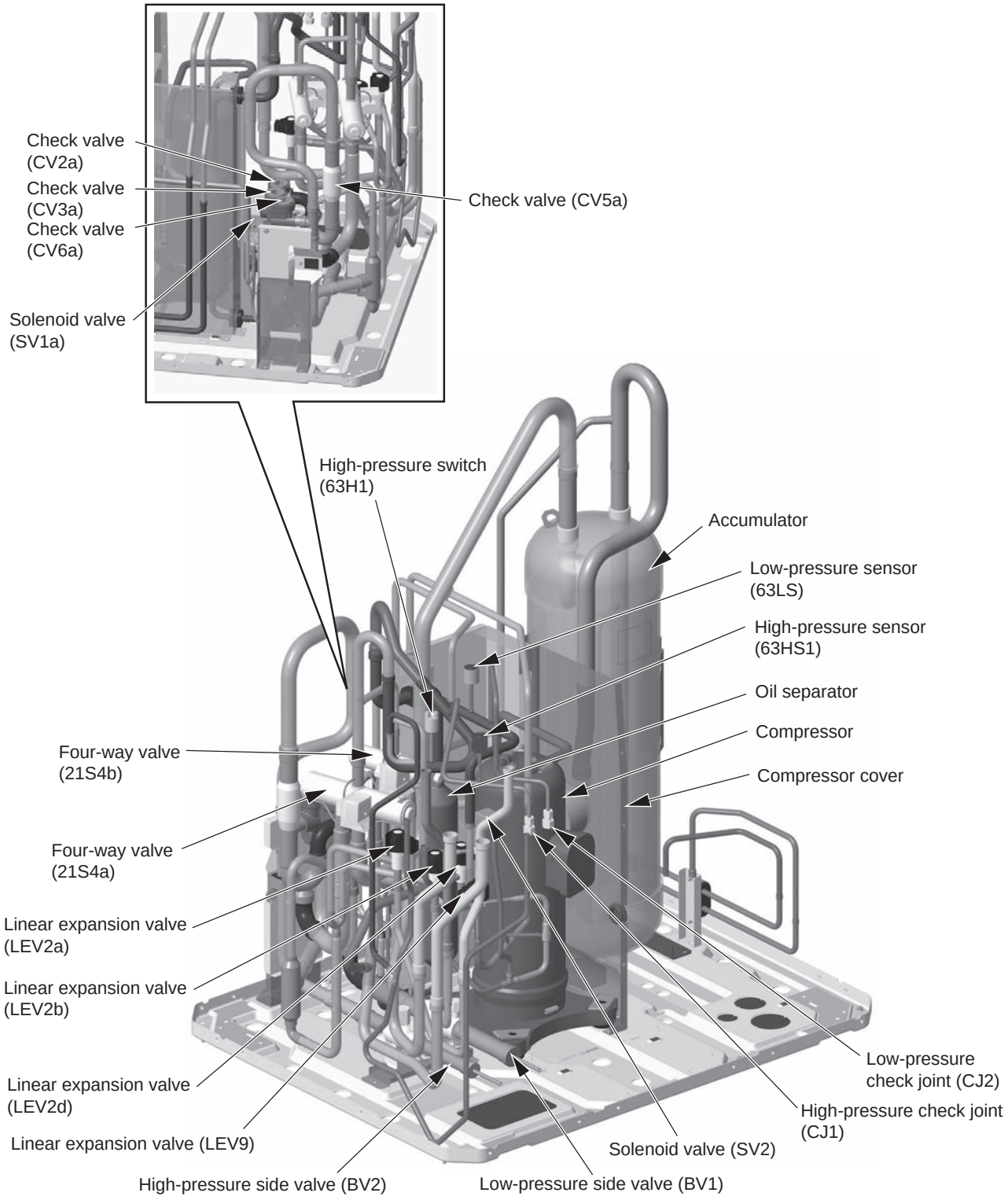

(2) PURY-EP72T(Y)NU-A/A1

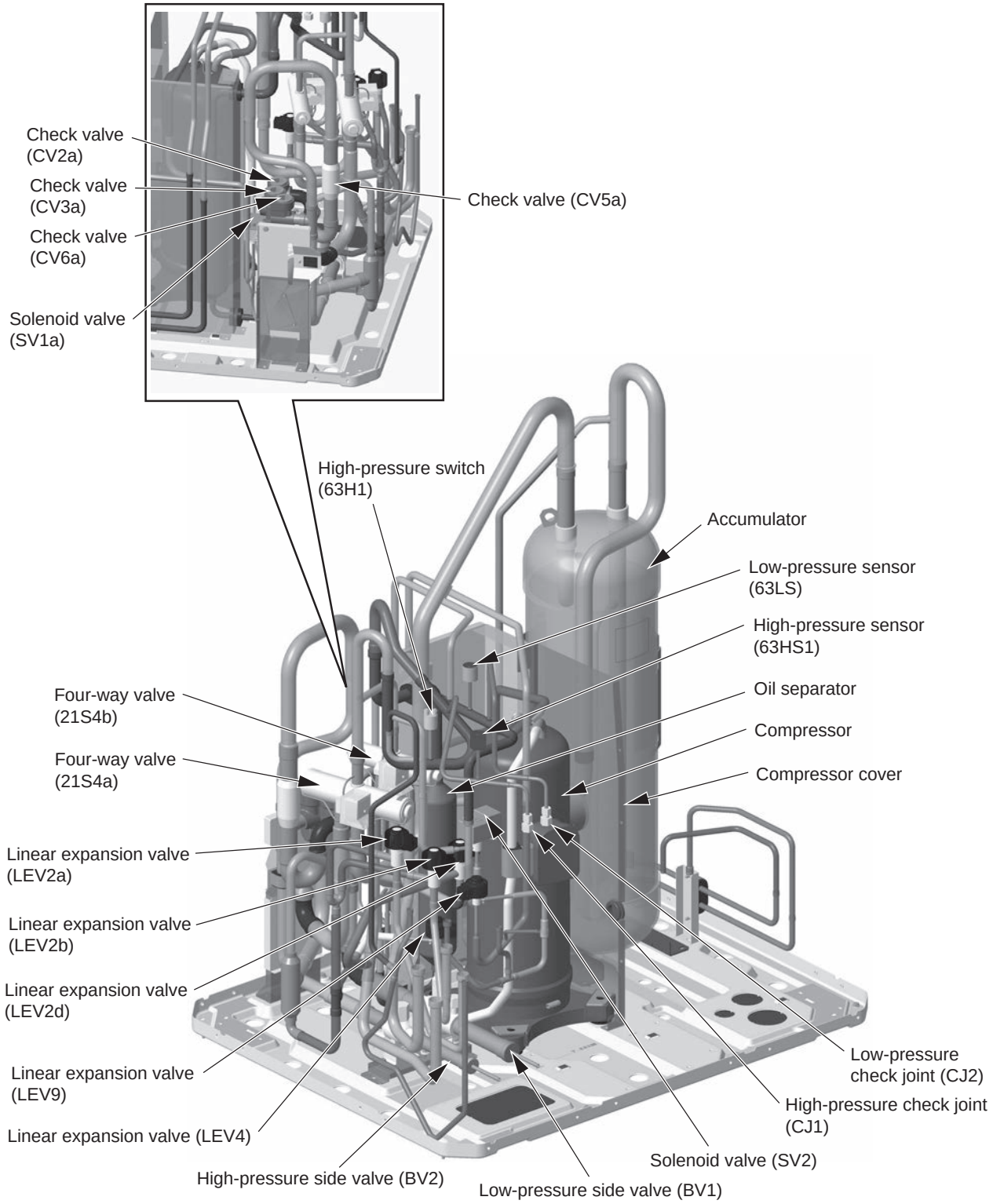

(3) PURY-P96, P120T(Y)NU-A/A1

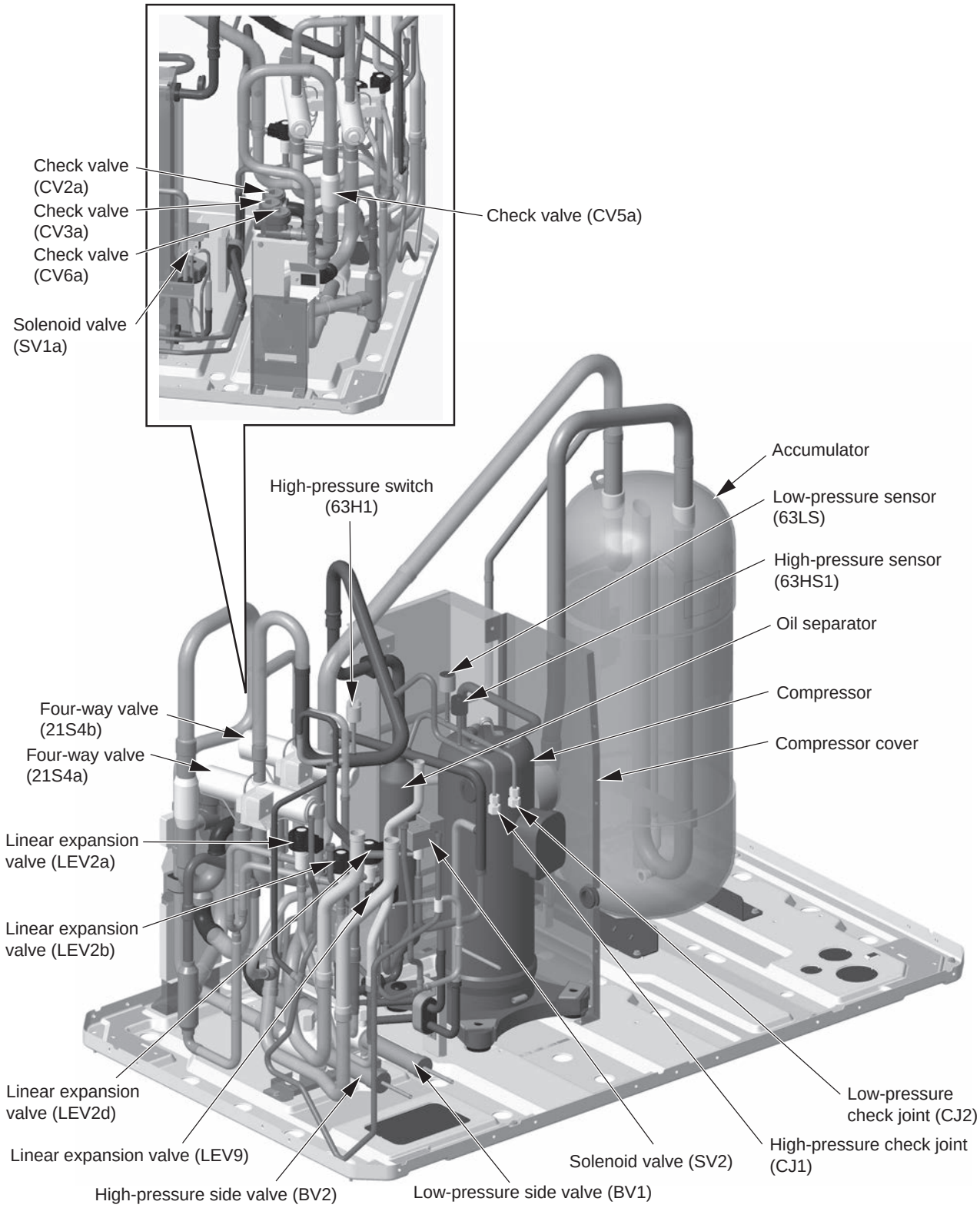

(4) PURY-EP96, EP120T(Y)NU-A/A1

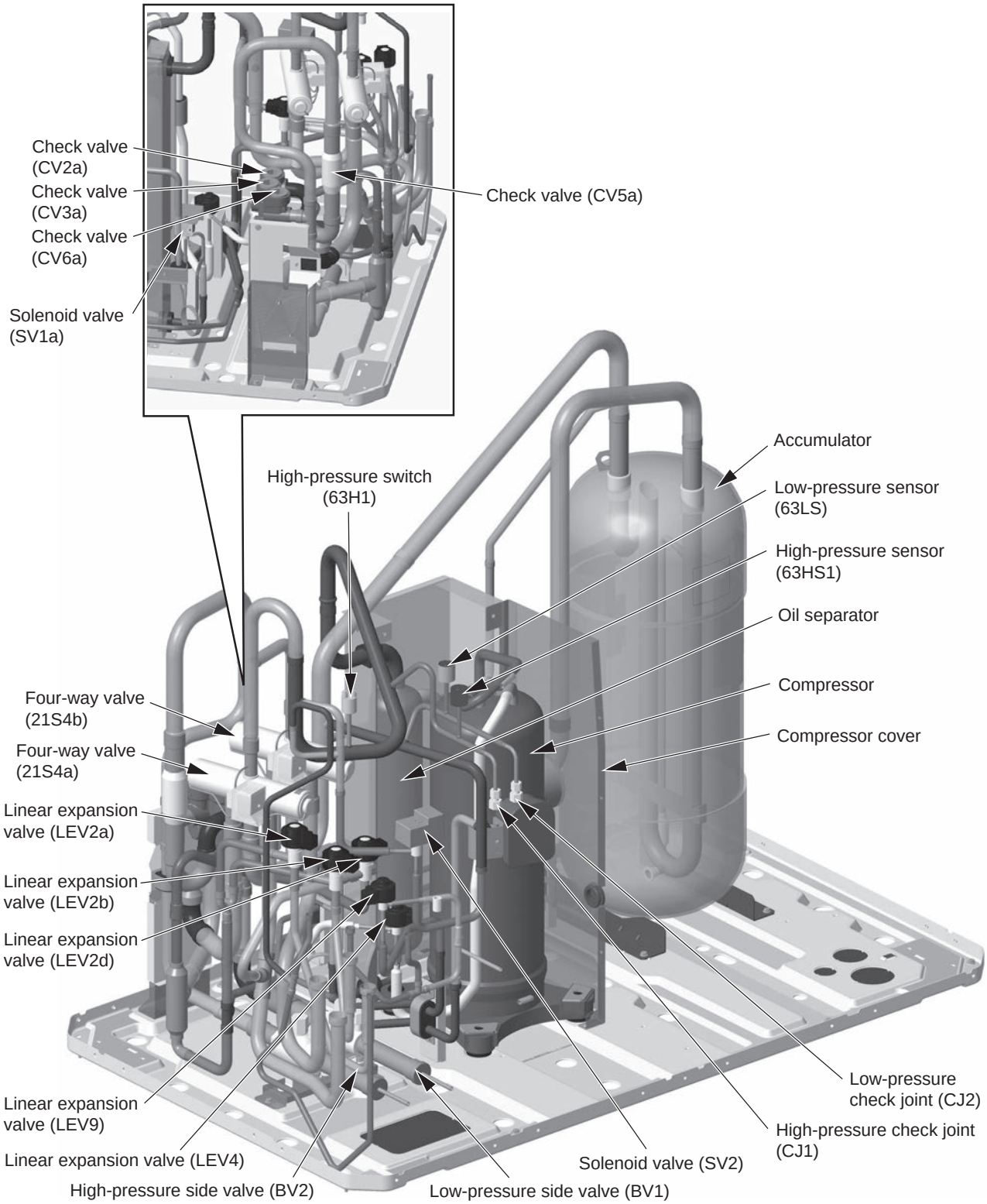

(5) PURY-P144T(Y)NU-A/A1

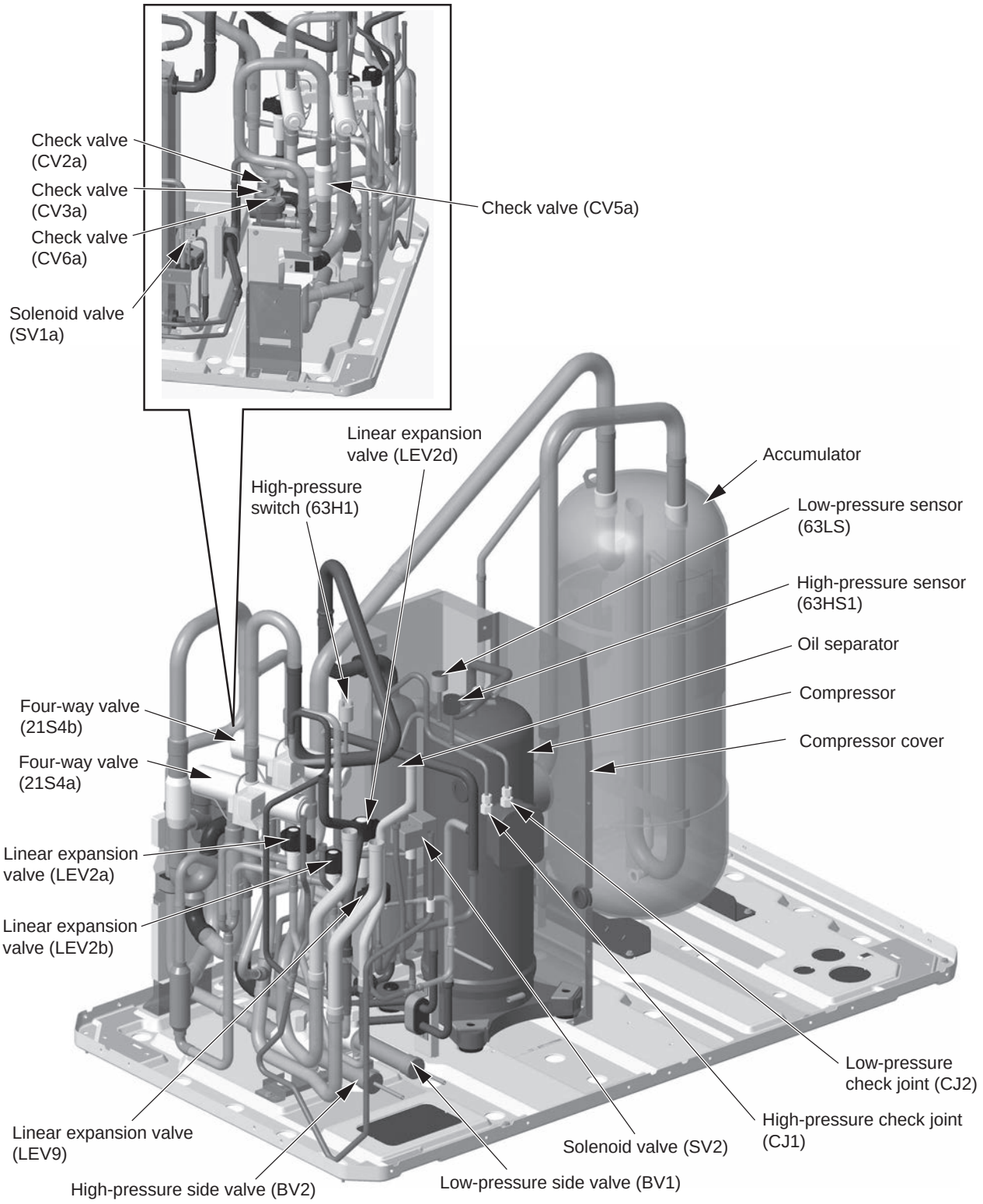

(6) PURY-EP144T(Y)NU-A/A1

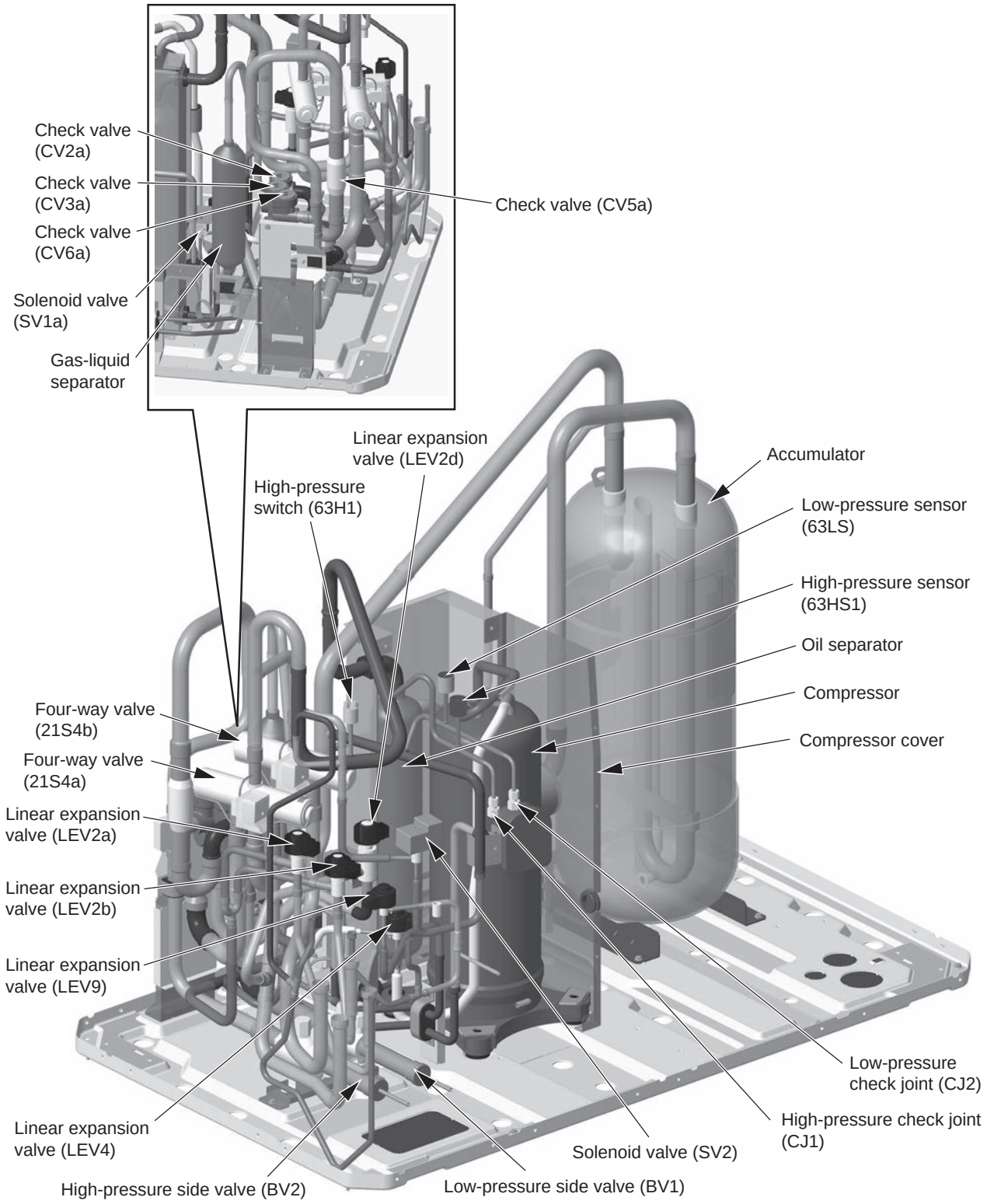

(7) PURY-P168T(Y)NU-A/A1

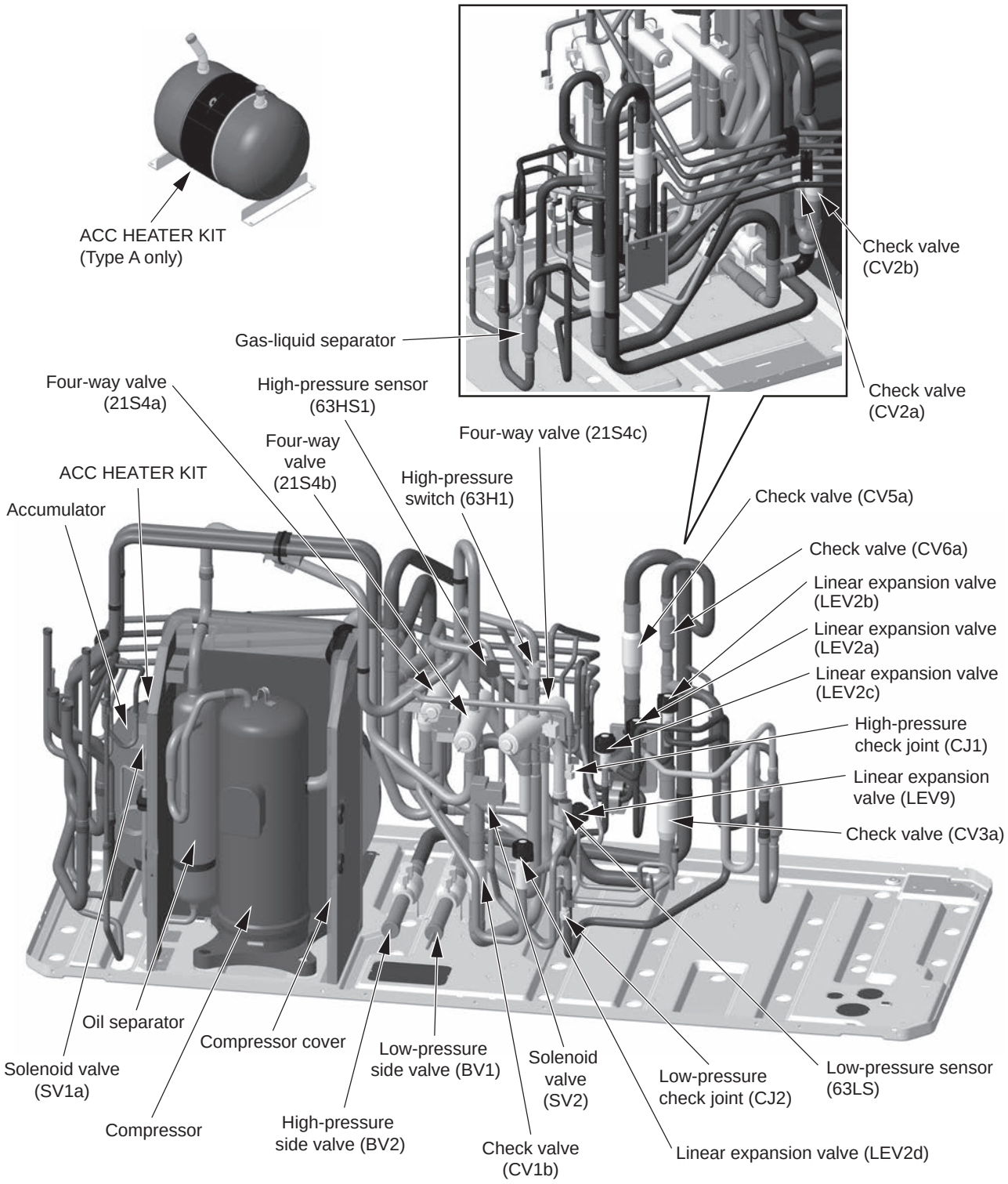

(8) PURY-EP168T(Y)NU-A/A1

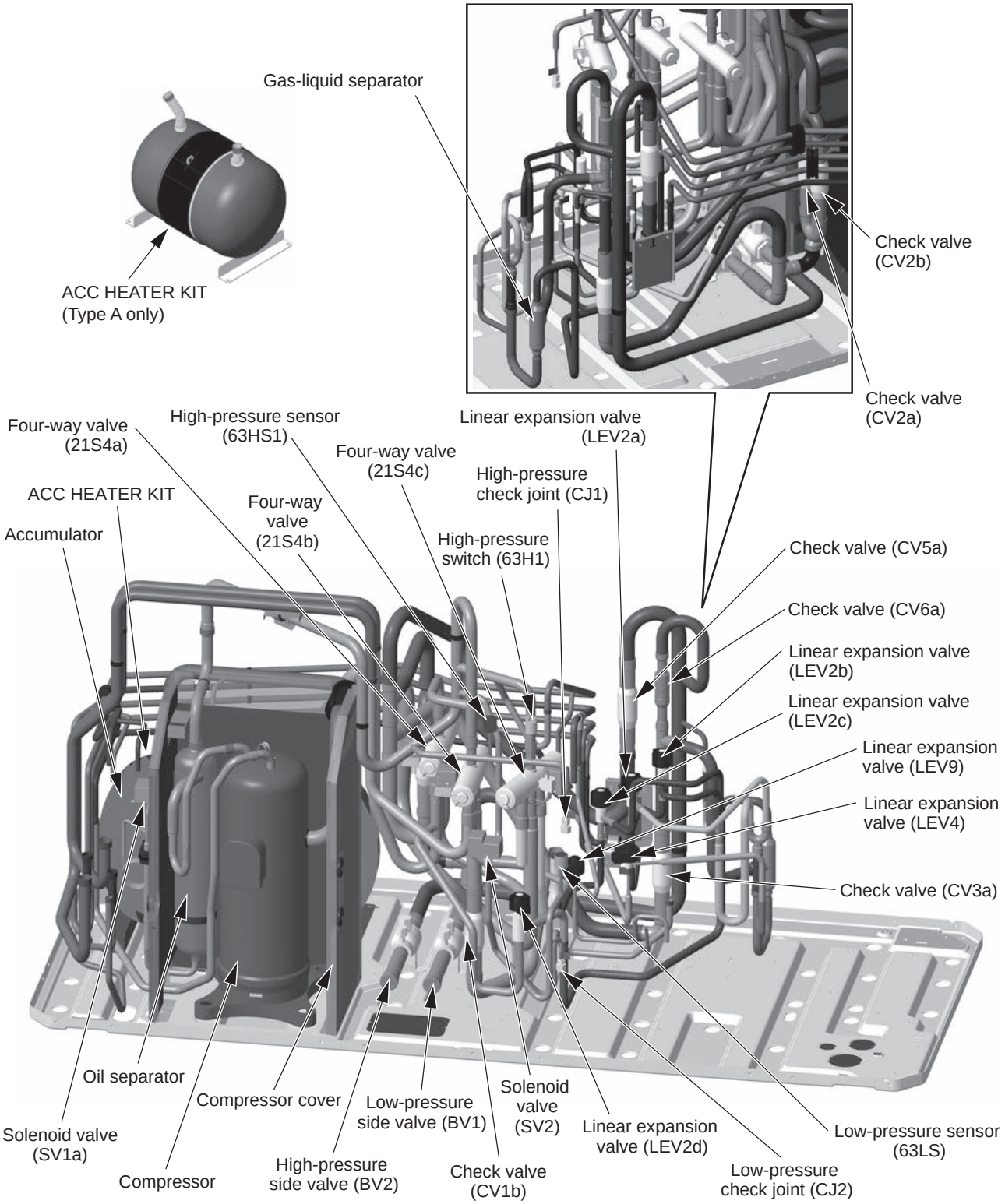

(9) PURY-EP192, EP216, EP240T(Y)NU-A/A1

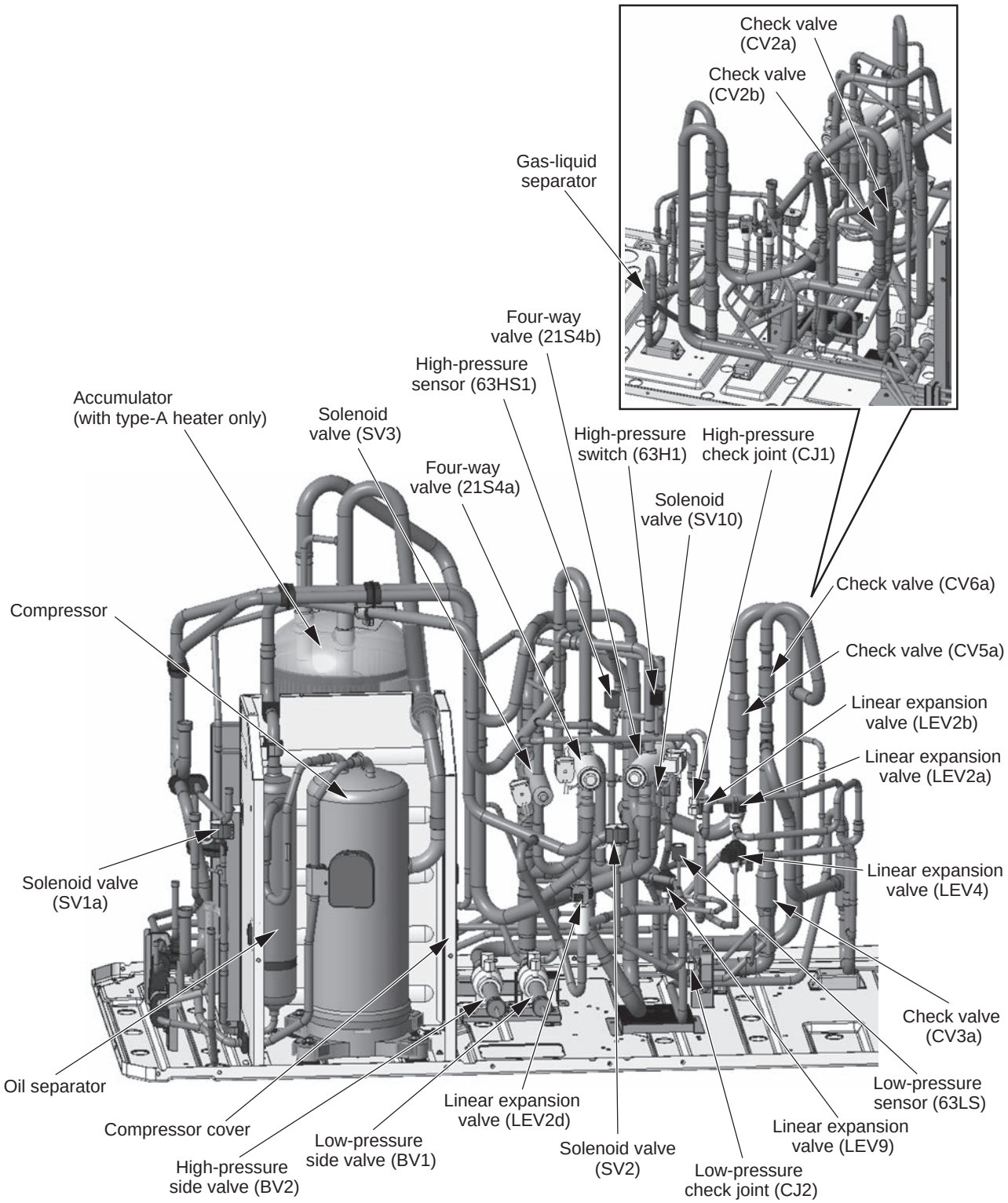

3-2 Outdoor Unit Refrigerant Circuit Diagrams

(1) PURY-P72 - P144T/YNU-A/A1

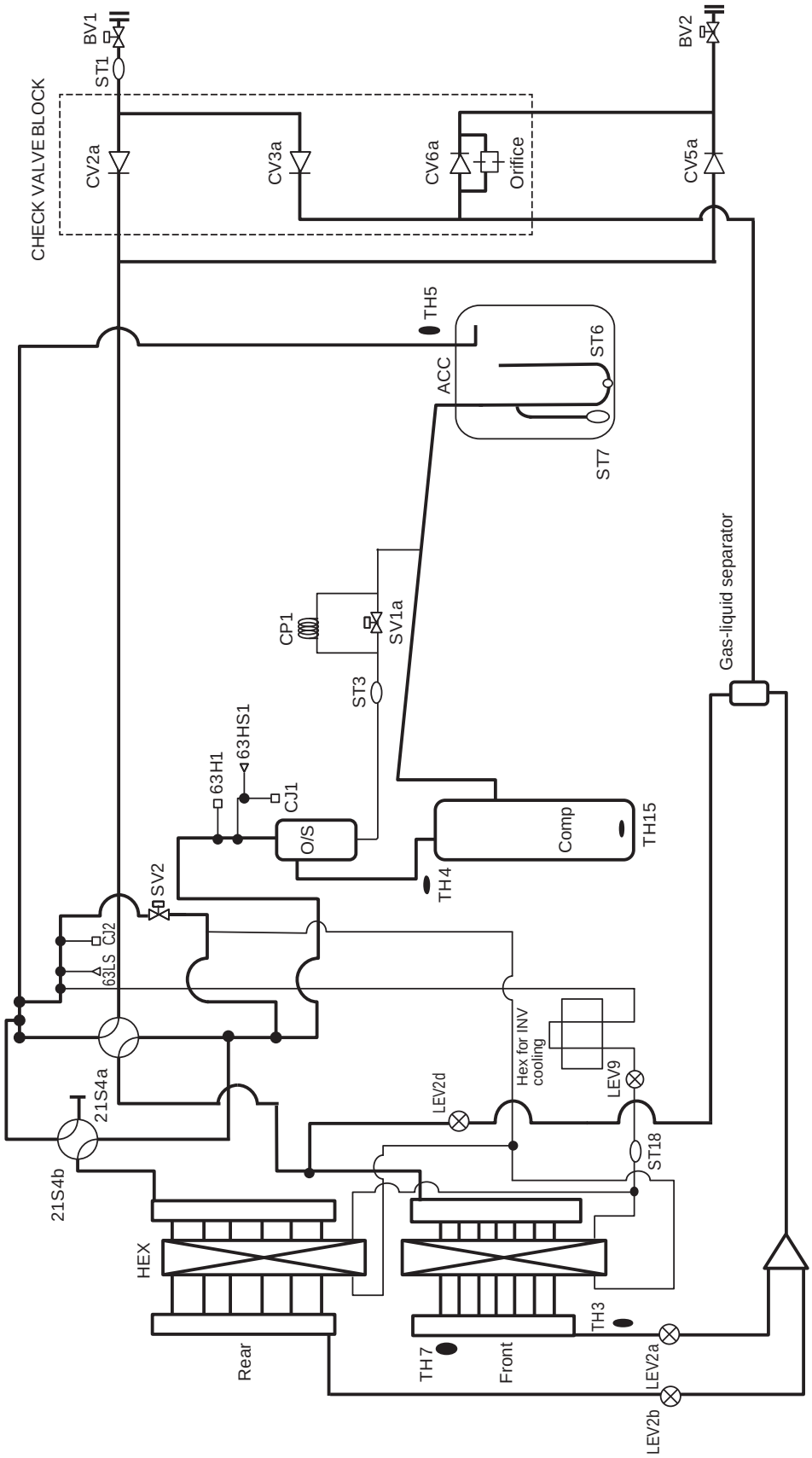

(2) PURY-P168T/YNU-A/A1

-A model only for TH16, 17, and 18

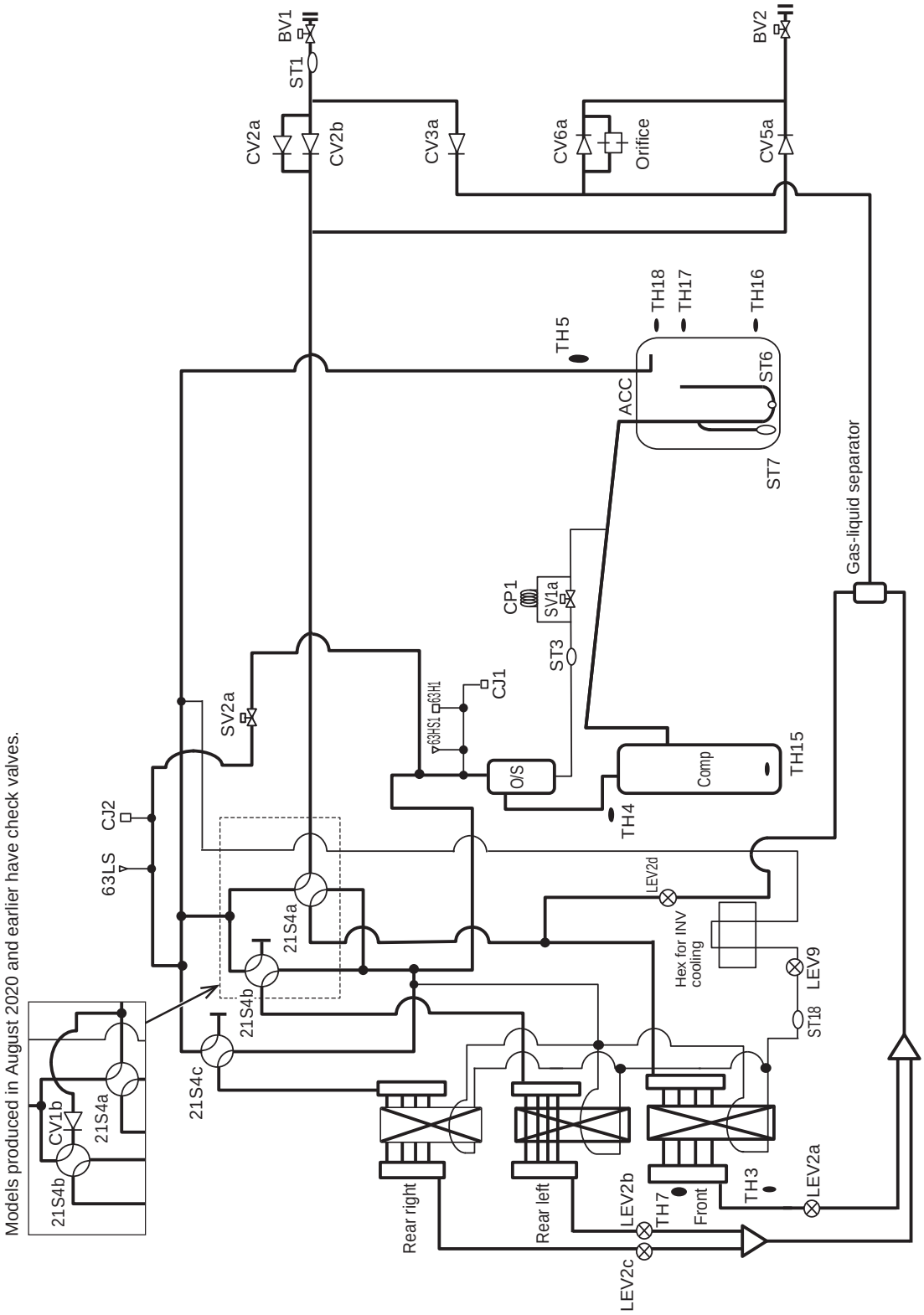

(3) PURY-EP72 - EP144T/YNU-A/A1

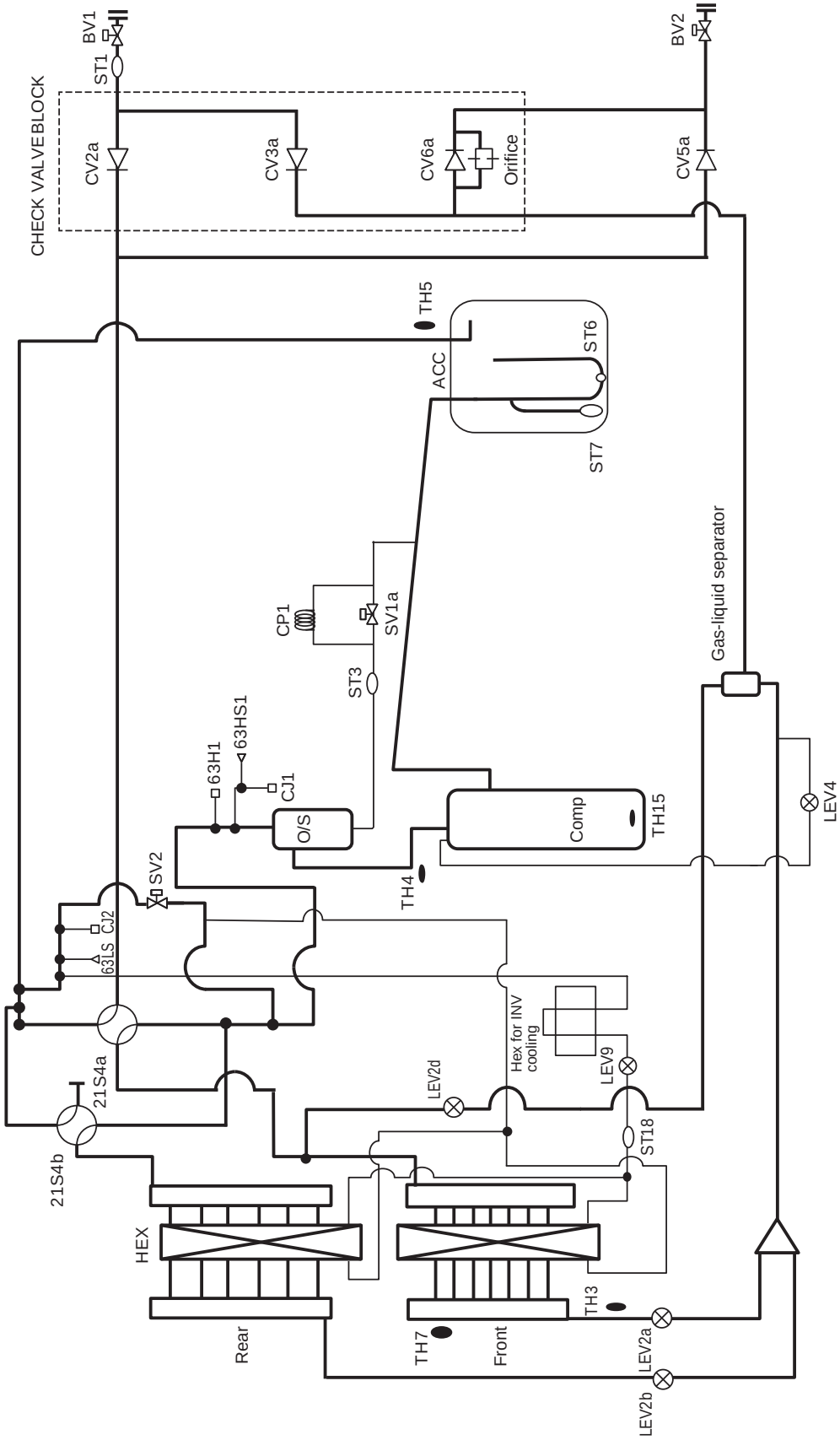

(4) PURY-EP168T/YNU-A/A1

-A model only for TH16, 17, and 18

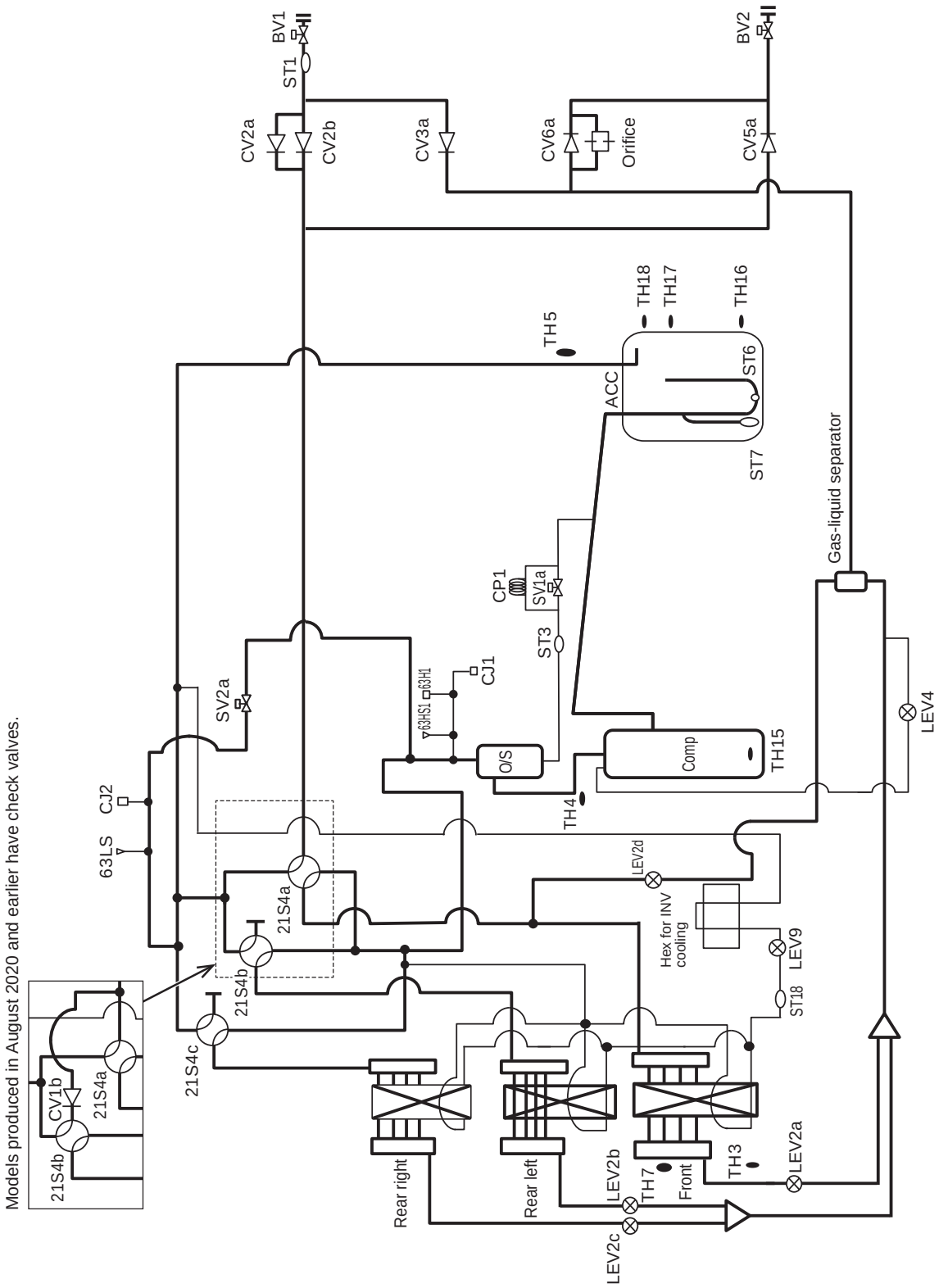

(5) PURY-EP192 - EP240T/YNU-A/A1

-A model only for TH18

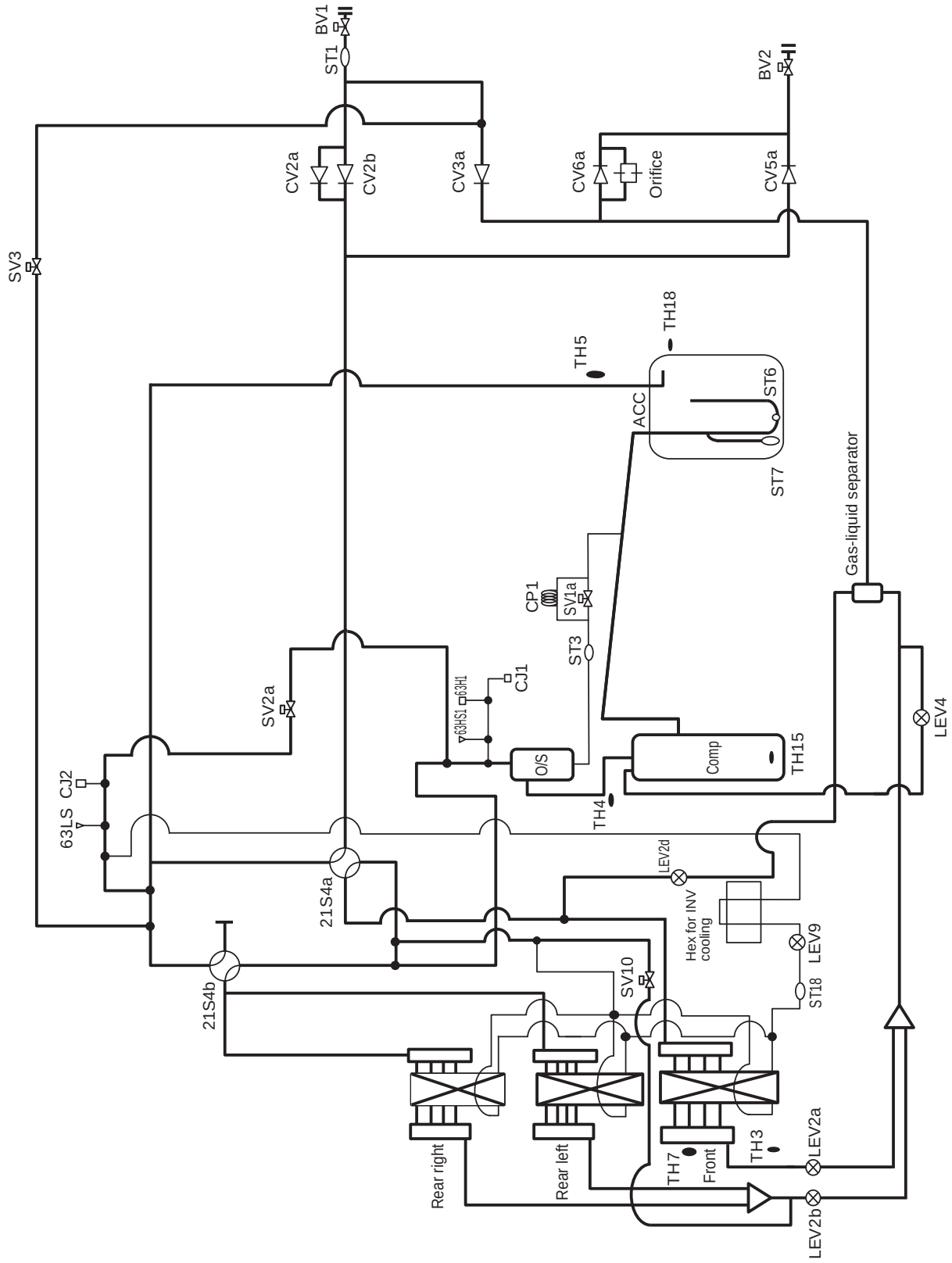

3-3 Functions of the Major Components of Outdoor Unit

Part name	Symbols (functions)	Notes	Usage	Specifications	Check method
Compressor	MC1 (Comp1)		Adjusts the amount of circulating refrigerant by adjusting the operating frequency based on the operating pressure data	P72, P96 models Low-pressure shell scroll compressor wirewound resistance 20°C [68°F] : 0.72Ω (YNU), 0.2Ω (TNU) EP72, EP96, P120, P144 models Low-pressure shell scroll compressor wirewound resistance 20°C [68°F] : 0.192Ω (YNU), 0.078Ω (TNU) EP120, EP144, EP168, P168 models Low-pressure shell scroll compressor wirewound resistance 20°C [68°F] : 0.219Ω (YNU), 0.087Ω (TNU) EP192, EP216, EP240 models Low-pressure shell scroll compressor wirewound resistance 20°C [68°F] : 0.212Ω (YNU), 0.079Ω (TNU)	
High pressure sensor	63HS1		1) Detects high pressure 2) Regulates frequency and provides high-pressure protection	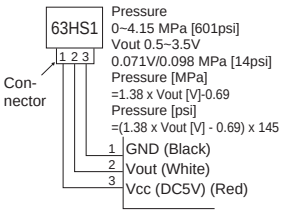	
Low pressure sensor	63LS		1) Detects low pressure 2) Provides low-pressure protection	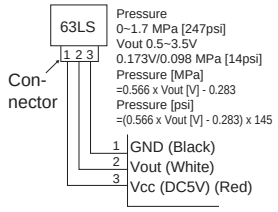	
Pressure switch	63H1		1) Detects high pressure 2) Provides high-pressure protection	4.15MPa[601psi] OFF setting	
Power supply transformer	Transformer	YNU only	Decreases the power supply voltage (460V) supplied to the circuit board	Primary rated voltage: 460V, 50/60Hz Secondary rated voltage: 229V (No-load voltage)	

Part name	Symbols (functions)	Notes	Usage	Specifications	Check method
Thermistor	TH4 (Discharge temperature)		1) Detects discharge air temperature 2) Provides high-pressure protection	Degrees Celsius $R_{120} = 7.465k\Omega$ $R_{25/120} = 4057$ $R_t = 7.465\exp\{4057(\frac{1}{273+t} - \frac{1}{393})\}$	Resistance check
			0°C[32°F] : 698 kΩ 10°C[50°F] : 413 kΩ 20°C[68°F] : 250 kΩ 30°C[86°F] : 160 kΩ 40°C[104°F] : 104 kΩ 50°C[122°F] : 70 kΩ 60°C[140°F] : 48 kΩ 70°C[158°F] : 34 kΩ 80°C[176°F] : 24 kΩ 90°C[194°F] : 17.5 kΩ 100°C[212°F] : 13.0 kΩ 110°C[230°F] : 9.8 kΩ		
	TH3 (Pipe temperature)		Controls defrosting during heating operation	Degrees Celsius $R_0 = 15k\Omega$ $R_{0/80} = 3460$ $R_t = 15\exp\{3460(\frac{1}{273+t} - \frac{1}{273})\}$ 0°C[32°F] :15 kΩ 10°C[50°F] :9.7 kΩ 20°C[68°F] :6.4 kΩ 25°C[77°F] :5.3 kΩ 30°C[86°F] :4.3 kΩ 40°C[104°F] :3.1 kΩ	
	TH7 (Outdoor temperature)		1) Detects outdoor air temperature 2) Controls fan operation		
	TH5 (Pipe temperature)		Fan operated on the 63LS and TH5 values.		
	TH15 (Compressor shell bottom temperature)		Detects compressor shell bottom temperature		
	TH16 Accumulator surface temperature (lower part)	(E)P168-A models only	Used to detect the liquid refrigerant level in the accumulator		
	TH17 Accumulator surface temperature (middle part)				
	TH18 Accumulator surface temperature (upper part)	(E)P168-A, EP192 - 240-A models only			
	THHS Inverter heat sink temperature		Inverter overheating protection	Degrees Celsius $R_{50} = 17k\Omega$ $R_{25/120} = 4016$ $R_t = 17\exp\{4016(\frac{1}{273+t} - \frac{1}{323})\}$ 0°C[32°F] :161 kΩ 10°C[50°F] :97 kΩ 20°C[68°F] :60 kΩ 25°C[77°F] :48 kΩ 30°C[86°F] :39 kΩ 40°C[104°F] :25 kΩ	

Part name	Symbols (functions)	Notes	Usage	Specifications	Check method
Thermistor	THL DCL temperature		DCL overheat protection	Degrees Celsius $R_{100} = 3.3k\Omega$ $B_{0/100} = 3970$ $R_t = 3.3 \exp\{3970(\frac{1}{273+t} - \frac{1}{373})\}$ 0°C[32°F] :162.2 kΩ 10°C[50°F] :98.3 kΩ 25°C[77°F] :49.1 kΩ 50°C[122°F] :17.6 kΩ 100°C[212°F] :3.3 kΩ	Resistance check
Solenoid valve	SV1a Discharge-suction bypass		1) High/low pressure bypass at start-up and stopping, and capacity control during low-load operation 2) High-pressure-rise prevention	AC208 - 230V Open while being powered/ closed while not being powered	Continuity check with a tester
	SV2		Prevention of low-pressure drop Refrigerant equalization control	AC208 - 230V Open while being powered/ closed while not being powered	
LEV	LEV2a, 2b, 2c	LEV2c is on the (E)P168 models only.	(During cooling) Heat exchanger capacity control (During heating) Refrigerant equalization control	DC12V Opening of stepping motor driving valve 0-3000 pulses (LEV2a, 2b, 2c) 0-3000 pulses (LEV2d, (E)P72-120) 0-6000 pulses (LEV2d, (E)P144-240)	Continuity Test with a Tester. Continuity between white and orange.Continuity between yellow, brown, and blue 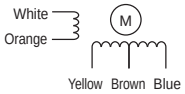
	LEV2d		Heat exchanger capacity control		
	LEV4	EP models only	Injection amount control	DC12V Opening of stepping motor driving valve 0-480 pulses (direct driven type)	
	LEV9		Refrigerant cooling control		
4-way valve	21S4a, b		Changeover between heating and cooling	AC208 - 230V Dead: cooling cycle Live: heating cycle	Continuity check with a tester
	21S4c	(E)P168 models only			
Fan motor	FAN motor 1,2	FAN motor 2 is on the (E)P96 - (E)P168, EP192 - EP240 models.	Regulates the heat exchanger capacity by adjusting the operating frequency and operating the propeller fan based on the operating pressure.	(YNU) (E)P72, (E)P168, EP192 - EP240 AC380 - 460V, 920W (E)P96 - (E)P144 AC380 - 460V, 460W (TNU) (E)P72, (E)P168, EP192 - EP240 AC200 - 230V, 920W (E)P96 - (E)P144 AC200 - 230V, 460W	
Belt heater	Belt Heater 1	(E)P168-A, EP192 - EP240-A models only	Heats the accumulator to detect the liquid refrigerant level	AC240V, 45W	Continuity check with a tester
	Belt Heater 2	(E)P168-A models only			

Part name	Symbols (functions)	Notes	Usage	Specifications	Check method
Crank-case heater	CH11	A1 models only	Heat the compressor shell to make liquid refrigerant in the compressor evaporate.	P72, P96 AC230V, 35W E72, E96, (P/E)120, (P/E)144, (P/E)168 AC240V, 45W E192, E216, E240 AC240V, 48W	Continuity check with a tester

3-4 Functions of the Major Components of Indoor Unit

Part Name	Symbol (functions)	Notes	Usage	Specification	Check method
Linear expan-sion valve	LEV		1) Adjusts superheat at the indoor heat exchanger outlet during cooling 2) Adjusts subcool at the in-door unit heat exchanger outlet during heating	DC12V Opening of stepping motor driving valve 0-(1800) pulses	Continuity Test with a Tester. Continuity between white, red, and or-ange. Continuity between yellow, brown, and blue. 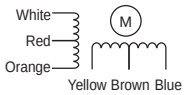
Thermis-tor	TH1 (Suction air tem-perature)		Indoor unit control (Thermo)	R_0=15kΩ $R_{0/80}$=3460 $Rt = 15\exp\{3460(\frac{1}{273+t} - \frac{1}{273})\}$ 0°C [32°F]:15 kΩ 10°C [50°F] :9.7 kΩ 20°C [68°F]:6.4 kΩ 25°C [77°F] :5.3 kΩ 30°C [86°F] :4.3 kΩ 40°C [104°F] :3.1 kΩ	Resistance check
	TH2 (Pipe tempera-ture)		1) Indoor unit control (Frost prevention, Hot adjust) 2) LEV control during heat-ing operation (subcool detection).		
	TH3 (Gas pipe tem-perature)		LEV control during cooling op-eration (superheat detection)		
	TH4 (Outdoor air temperature)*1		Indoor unit control (Thermo)		
	Temperature sensor (Indoor air temperature)		Indoor unit control (Thermo)		

*1. Indicates gas pipe temperature on the PKFY-P VHM-E and PKFY-P VKM-E models.

3-5 External Appearance and Refrigerant Circuit Components of BC Controller

1. CMB-P○○ NU-J1/2, JA1/2, KA1/2

(1) Front

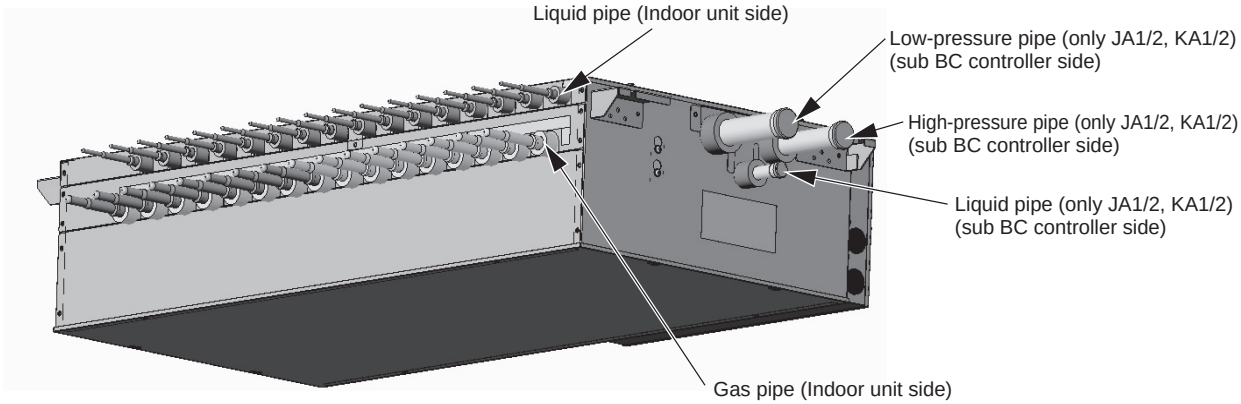

(2) Rear view <J1/2 type>

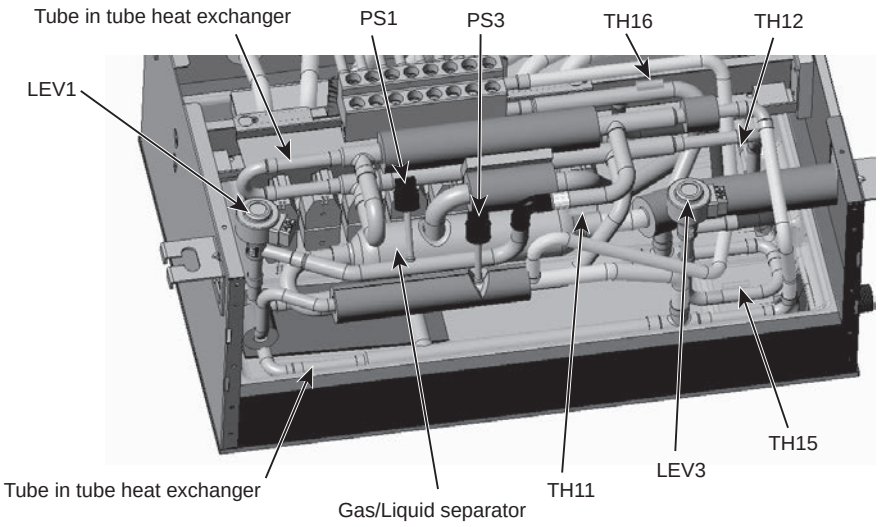

(3) Rear view <JA1/2 type>

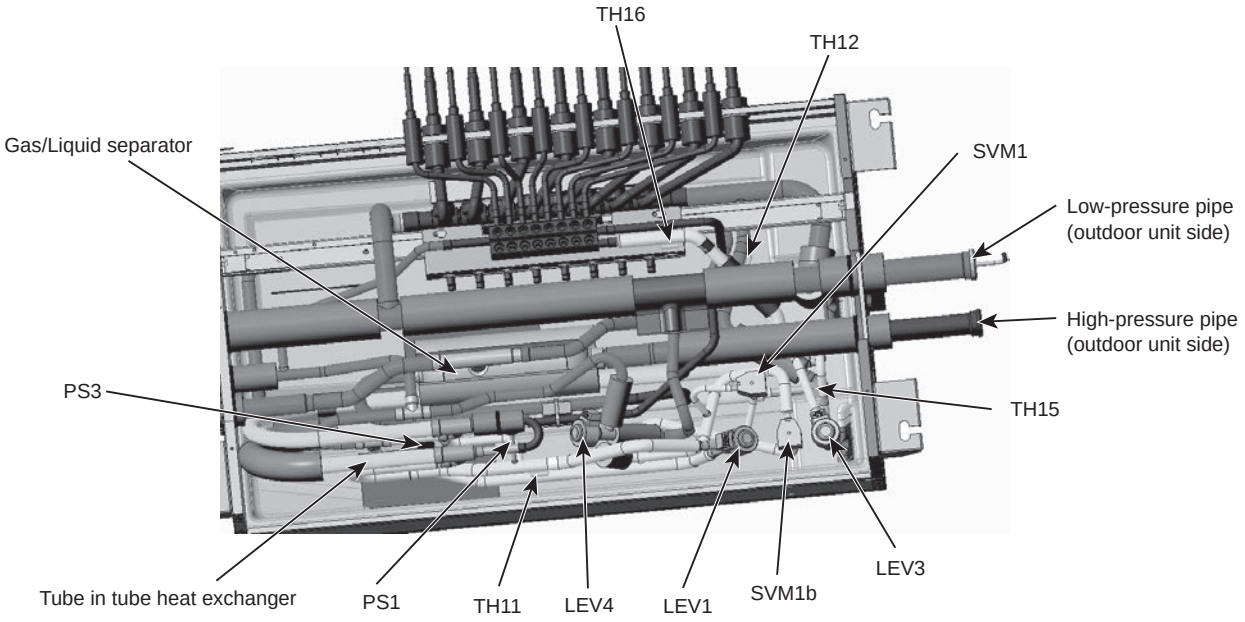

(4) Rear view <KA1/2 type>

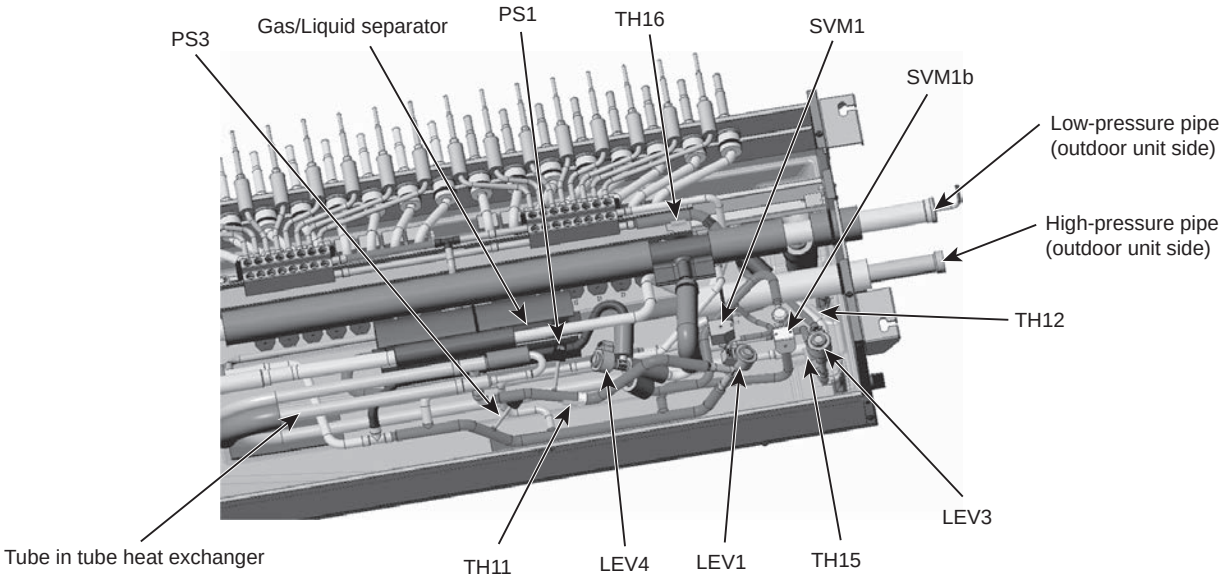

2. CMB-P○○ NU-KB1/2

(1) Front

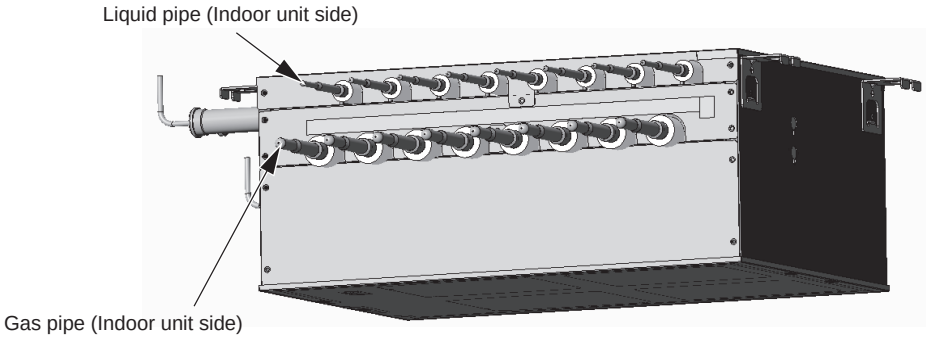

(2) Rear view

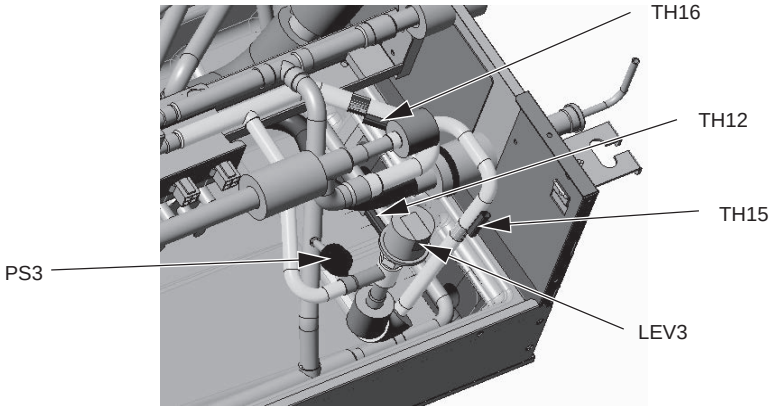

3-6 BC Controller Refrigerant Circuit Diagrams

(1) CMB-P104, 106, 108, 1012, P1016NU-J1/2

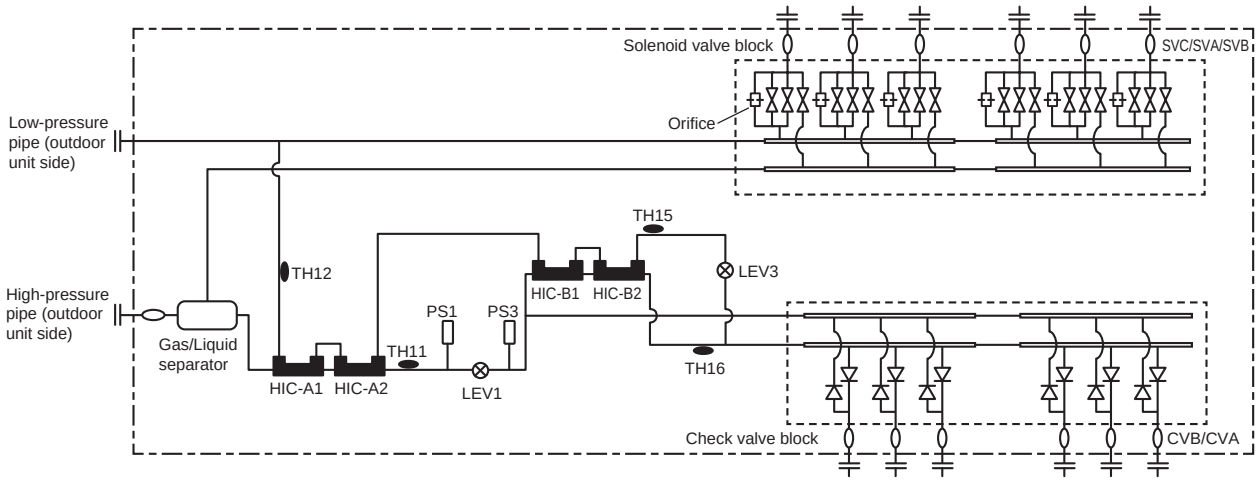

(2) CMB-P108, 1012, P1016NU-JA1/2 (main)

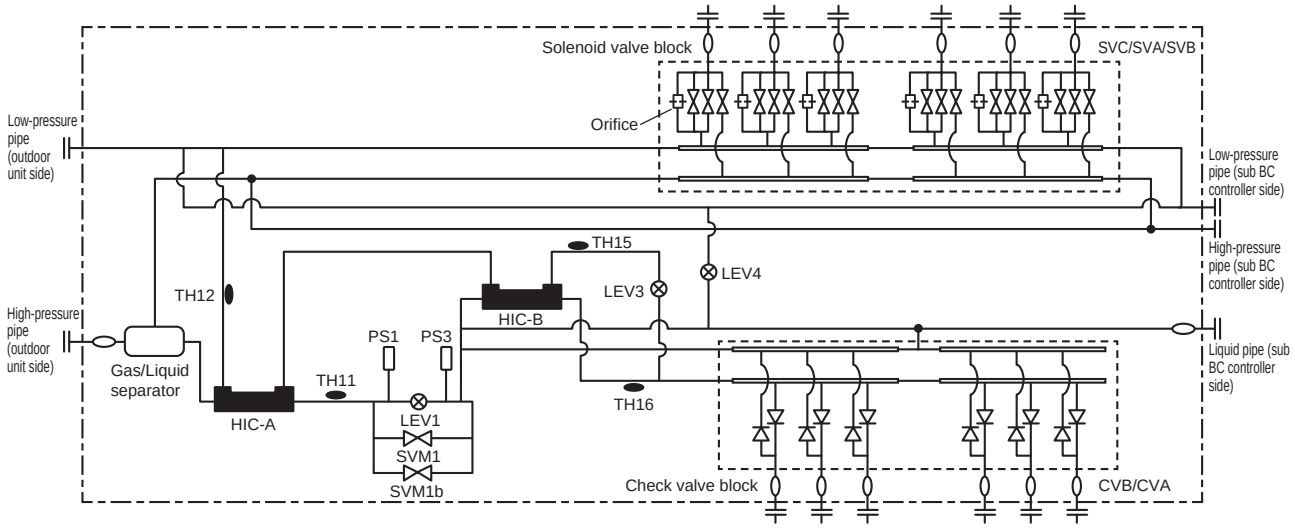

(3) CMB-P1016NU-KA1/2 (main)

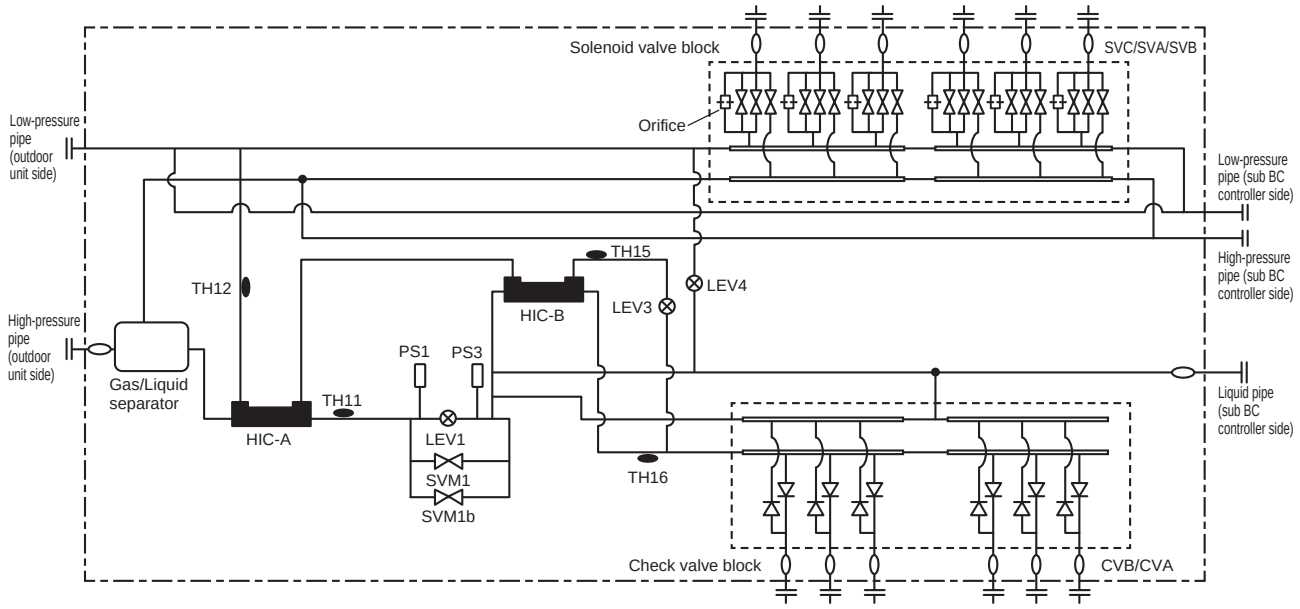

(4) CMB-P104, 108NU-KB1/2 (sub)

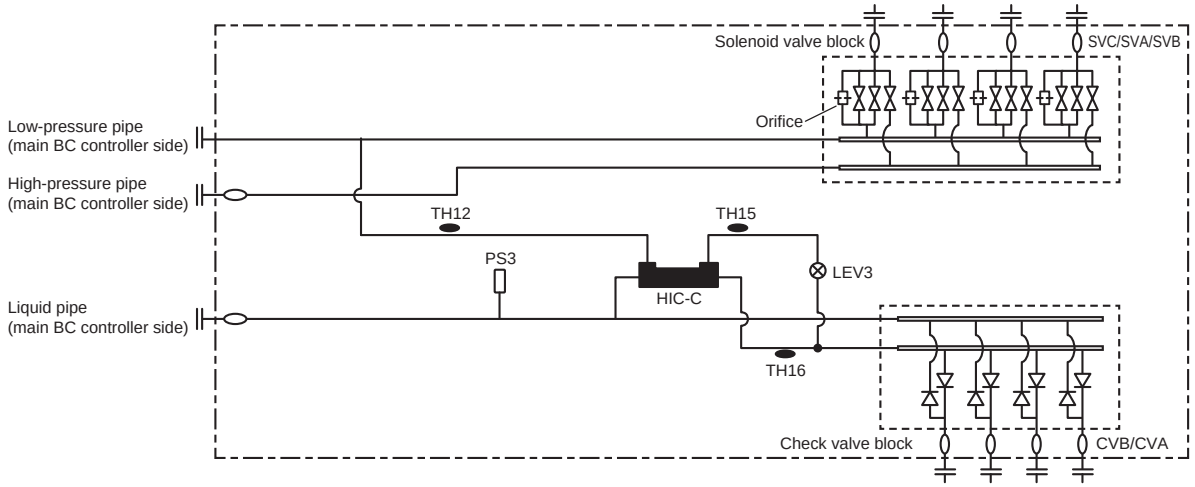

3-7 Functions of the Major Components of BC Controller

(1) J type

Part name	Symbols (functions)	Part code	Usage	Specifications	Check method
Pressure sensor	PS1 (High pressure side)		1) Detects high pressure 2) LEV control	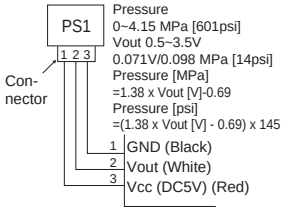	
	PS3 (Intermediate pressure)		1) Detects intermediate pressure 2) LEV control		
Thermistor	TH11 (Liquid inlet temperature)		LEV control (Liquid level control)	$R_0 = 15k\Omega$ $R_{0/80} = 3460$ $R_t = 15\exp\{3460\,(\frac{1}{273+t} - \frac{1}{273})\}$ 0°C[32°F] : 15 kΩ 10°C[50°F] :9.7 kΩ 20°C[68°F] :6.4 kΩ 25°C[77°F] :5.3 kΩ 30°C[86°F] :4.3 kΩ 40°C[104°F] :3.1 kΩ	
	TH12 (Bypass outlet temperature)		LEV control (Superheat)		
	TH15 (Bypass inlet temperature)		LEV control (Superheat)		
	TH16 (Liquid refrigerant temperature)		LEV control (Subcool)		
Solenoid valve	SVA		Provides refrigerant to indoor unit in cooling operation	AC208-230V Open while being powered/ closed while not being powered	Continuity check with a tester
	SVB		Provides refrigerant to indoor unit in heating operation		
	SVC		Provides refrigerant to indoor unit in cooling operation		
LEV	LEV1		1) Liquid level control 2) Pressure differential control	DC12V Opening of a valve driven by a stepping motor 41-3000 pulses	Same as indoor LEV
	LEV3				

(2) JA type

Part name	Symbols (functions)	Part code	Usage	Specifications	Check method
Pressure sensor	PS1 (High pressure side)		1) Detects high pressure 2) LEV control	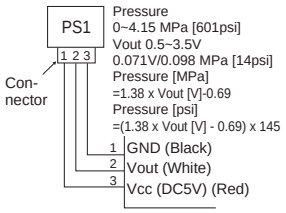	
	PS3 (Intermediate pressure)		1) Detects intermediate pressure 2) LEV control		
Thermistor	TH11 (Liquid inlet temperature)		LEV control (Liquid level control)	$R_0 = 15k\Omega$ $R_{0/80} = 3460$ $R_t = 15\exp\{3460\,(\frac{1}{273+t} - \frac{1}{273})\}$ 0°C[32°F] : 15 kΩ 10°C[50°F] :9.7 kΩ 20°C[68°F] :6.4 kΩ 25°C[77°F] :5.3 kΩ 30°C[86°F] :4.3 kΩ 40°C[104°F] :3.1 kΩ	
	TH12 (Bypass outlet temperature)		LEV control (Superheat)		
	TH15 (Bypass inlet temperature)		LEV control (Superheat)		
	TH16 (Liquid refrigerant temperature)		LEV control (Subcool)		
Solenoid valve	SVM1		Opens during cooling and defrost modes	AC208-230V Open while being powered/ closed while not being powered	Continuity check with a tester
	SVM1b		Opens during cooling and defrost modes		
	SVA		Provides refrigerant to indoor unit in cooling operation		
	SVB		Provides refrigerant to indoor unit in heating operation		
	SVC		Provides refrigerant to indoor unit in cooling operation		
LEV	LEV1		1) Liquid level control 2) Pressure differential control 3) Subcool control	DC12V Opening of a valve driven by a stepping motor 41 - 3000 pulses	Same as indoor LEV
	LEV3				
	LEV4				

(3) KA type

Part name	Symbols (functions)	Part code	Usage	Specifications	Check method
Pressure sensor	PS1 (High pressure side)		1) Detects high pressure 2) LEV control	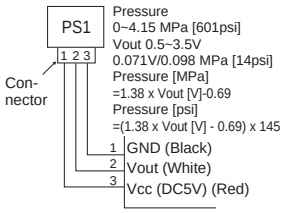	
	PS3 (Intermediate pressure)		1) Detects intermediate pressure 2) LEV control		
Thermistor	TH11 (Liquid inlet temperature)		LEV control (Liquid level control)	$R_0 = 15k\Omega$ $R_{0/80} = 3460$ $R_t = 15\exp\{3460\,(\frac{1}{273+t} - \frac{1}{273})\}$ 0°C[32°F] : 15 kΩ 10°C[50°F] :9.7 kΩ 20°C[68°F] :6.4 kΩ 25°C[77°F] :5.3 kΩ 30°C[86°F] :4.3 kΩ 40°C[104°F] :3.1 kΩ	
	TH12 (Bypass outlet temperature)		LEV control (Superheat)		
	TH15 (Bypass inlet temperature)		LEV control (Superheat)		
	TH16 (Liquid refrigerant temperature)		LEV control (Subcool)		
Solenoid valve	SVM1		Opens during cooling and defrost modes	AC208-230V Open while being powered/ closed while not being powered	Continuity check with a tester
	SVM1b		Opens during cooling and defrost modes		
	SVA		Provides refrigerant to indoor unit in cooling operation		
	SVB		Provides refrigerant to indoor unit in heating operation		
	SVC		Provides refrigerant to indoor unit in cooling operation		
LEV	LEV1		1) Liquid level control 2) Pressure differential control 3) Subcool control	DC12V Opening of a valve driven by a stepping motor 41 - 3000 pulses	Same as indoor LEV
	LEV3				
	LEV4				

(4) KB type

Part name	Symbols (functions)	Part code	Usage	Specifications	Check method
Pressure sensor	PS3 (Intermediate pressure)		1) Detects intermediate pressure 2) LEV control	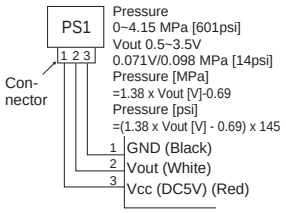	
Thermistor	TH12 (Bypass outlet temperature)		LEV control (Superheat)	$R_0 = 15k\Omega$ $R_{0/80} = 3460$ $R_t = 15\exp\{3460\ (\frac{1}{273+t} - \frac{1}{273})\}$ 0°C[32°F] : 15 kΩ 10°C[50°F] :9.7 kΩ 20°C[68°F] :6.4 kΩ 25°C[77°F] :5.3 kΩ 30°C[86°F] :4.3 kΩ 40°C[104°F] :3.1 kΩ	
	TH15 (Bypass inlet temperature)		LEV control (Superheat)		
	TH16 (Liquid refrigerant temperature)		LEV control (Subcool)		
Solenoid valve	SVA		Provides refrigerant to indoor unit in cooling operation	AC208-230V Open while being powered/ closed while not being powered	Continuity check with a tester
	SVB		Provides refrigerant to indoor unit in heating operation		
	SVC		Provides refrigerant to indoor unit in cooling operation		
LEV	LEV3		Pressure differential control	DC12V Opening of a valve driven by a stepping motor 0-2000 pulses	Same as indoor LEV

Chapter 4 Electrical Components and Wiring Diagrams

4-1 Outdoor Unit Circuit Board Arrangement 1
4-1-1 Outdoor Unit Control Box 1
4-2 Outdoor Unit Circuit Board Components 9
4-2-1 Control Board 9
4-2-2 Power-supply board (PS Board) 10
4-2-3 Inverter Board (INV Board) 12
4-2-4 Fan Board 17
4-2-5 Noise Filter 19
4-2-6 Capacitor Board (CAP Board) 23
4-3 Outdoor Unit Electrical Wiring Diagrams 25
4-4 Transmission Booster Electrical Wiring Diagrams 45
4-5 BC Controller Circuit Board Arrangement 46
4-5-1 BC Controller Control Box 46
4-6 BC Controller Circuit Board Components 47
4-6-1 BC Board 47
4-6-2 Four-Relay Board 48
4-6-3 Ten-Relay Board 48
4-7 BC Controller Electrical Wiring Diagrams 49

4-1 Outdoor Unit Circuit Board Arrangement

4-1-1 Outdoor Unit Control Box

<HIGH VOLTAGE WARNING>

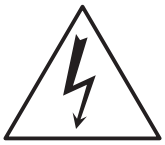

- Control box houses high-voltage parts.
- When opening or closing the front panel of the control box, do not let it come into contact with any of the internal components.
- Before inspecting the inside of the control box, turn off the power, keep the unit off for at least 10 minutes, and confirm that the voltage of the capacitor in the main circuit has dropped to 20 VDC or less.

(1) PURY-(E)P72Y/TNU-A/A1

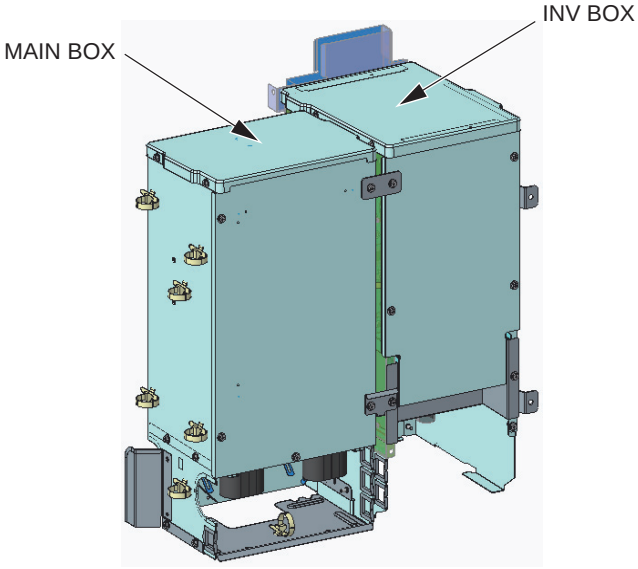

Note

1) Exercise caution not to damage the front panel of the control box. Damage to this part affect the waterproof and dust proof properties of the control box and may result in damage to its internal components.
2) Faston terminals have a locking function. Make sure the cable heads are securely locked in place. Press the tab on the terminals to remove them.
3) Control box houses high temperature parts. Be well careful even after turning off the power source.
4) **Perform the service after disconnecting the relay connector in the INV box (RYFAN1). Before plugging in or unplugging connectors, check that the outdoor unit fan is not rotating and that the voltage across Pin 1 (+) and Pin 5 (-) of connector RYPN in the INV box is 20 VDC or less. The capacitor may collect a charge and cause an electric shock when the outdoor unit fan rotates in windy conditions.** Refer to the wiring nameplate for details.
5) To connect wiring to TB7 in the MAIN BOX, check that the voltage is 20 VDC or below.
6) After servicing, reconnect the relay connector (RYFAN1) in the INV box as it was.
7) When opening or closing the front panel of the control box, do not touch any of the internal components. Before inspecting inside the control box, turn off the power to the unit, leave it turned off for at least 10 minutes, and check that the voltage across Pin 1 (+) and Pin 5 (-) of connector RYPN in the INV box is 20 VDC or less. It takes about 10 minutes to discharge electricity after the power supply is turned off.
8) When the power is on, the compressor or heater is energized even while the compressor is stopped. Before turning on the power, disconnect all power supply wires from the compressor terminal block, and measure the insulation resistance of the compressor. Check the compressor for a ground fault. If the insulation resistance is 1.0 MΩ or below, connect all power supply wires to the compressor and turn on the power to the outdoor unit.The liquid refrigerant in the compressor will evaporate by energizing the compressor or the heater.

MAIN BOX

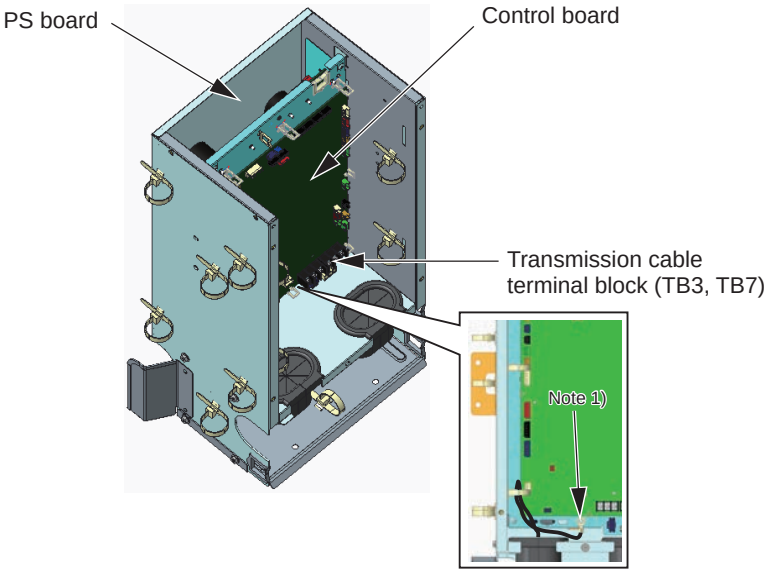

Note

1) Leave the grounding connected during maintenance.

INV BOX (YNU)

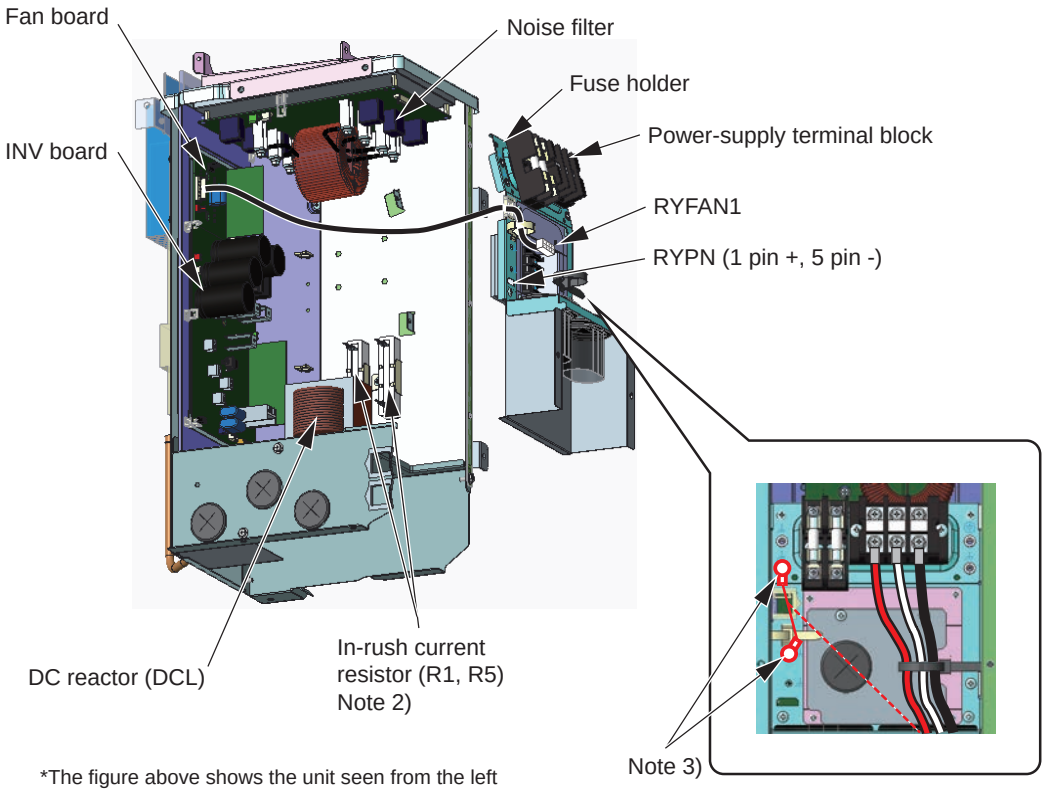

*The figure above shows the unit seen from the left after the front panel and the left side panel were removed.

Note

1) Refrigerant pipes are connected to the back of the INV box. Do not forcibly pull out the INV box. Doing so may result in deformation of the pipe.
2) A Faston terminal on the inrush current resistor has a locking function. Check that the terminal is securely locked in place. Press the tab in the middle of the terminal to remove it.
3) Leave the grounding connected during maintenance.

INV BOX (TNU)

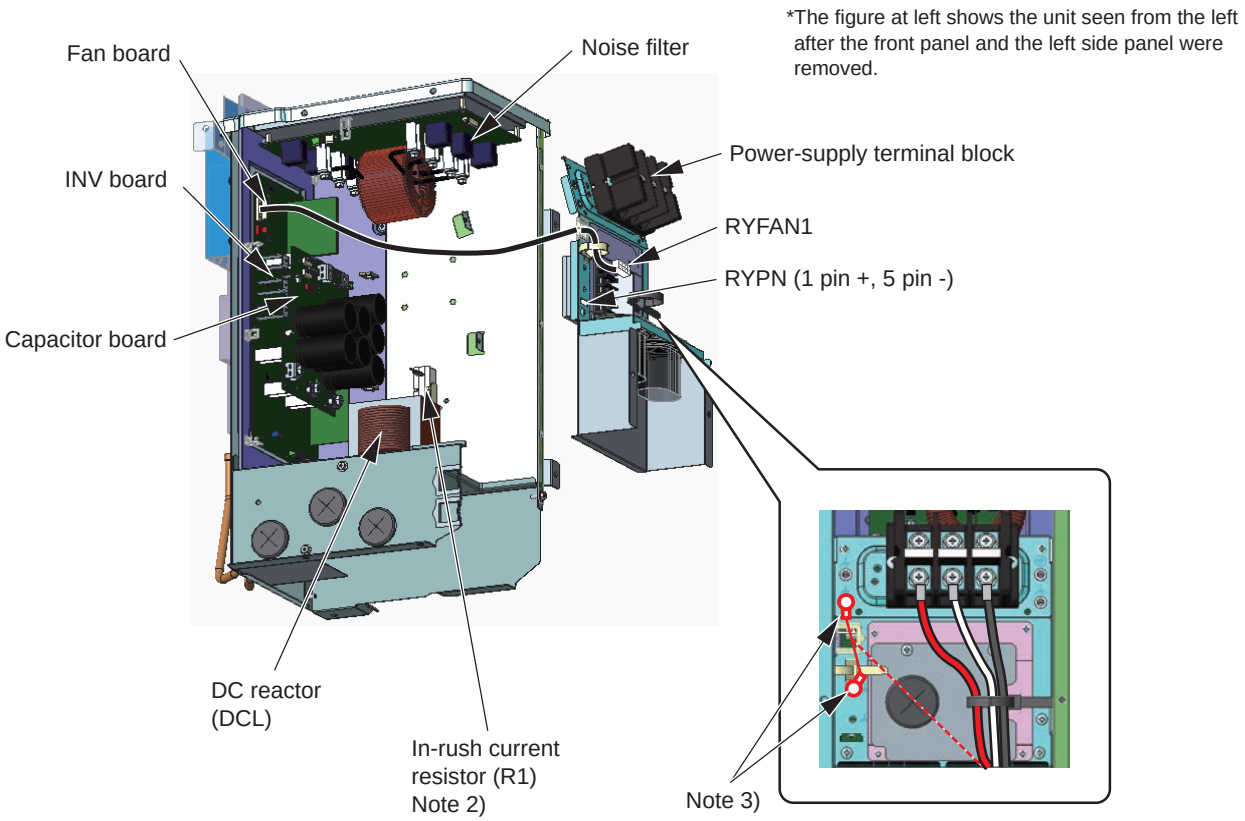

Note

1) Refrigerant pipes are connected to the back of the INV box. Do not forcibly pull out the INV box. Doing so may result in deformation of the pipe.
2) A Faston terminal on the inrush current resistor has a locking function. Check that the terminal is securely locked in place. Press the tab in the middle of the terminal to remove it.
3) Leave the grounding connected during maintenance.

(2) PURY-(E)P96, (E)P120, (E)P144, P168

(YNU)

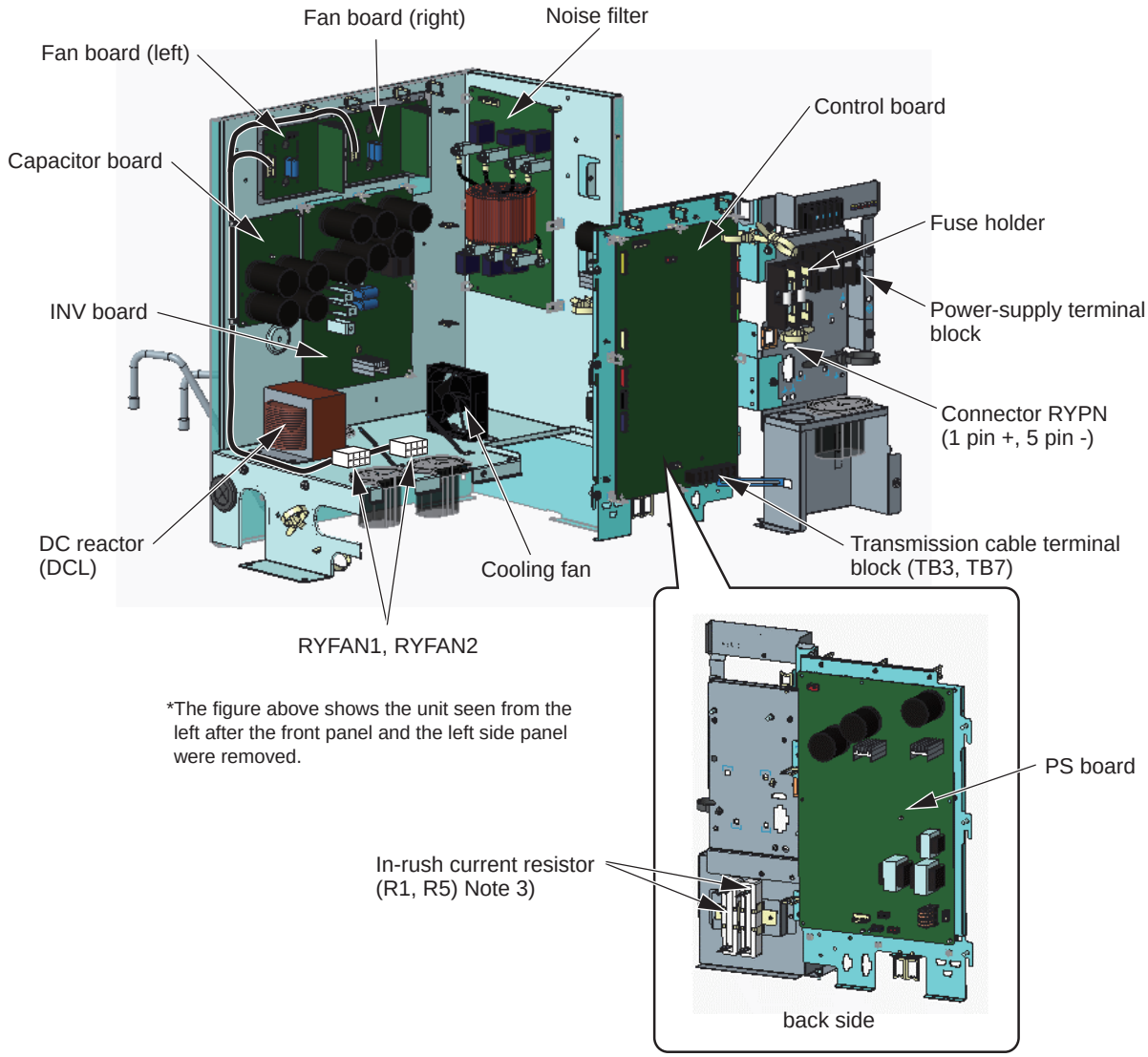

*The figure above shows the unit seen from the left after the front panel and the left side panel were removed.

Note

1) Refrigerant pipes are connected to the back of the control box. Do not forcibly pull out the control box. Doing so may result in deformation of the pipe.
2) Exercise caution not to damage the front panel of the control box. Damage to this part affect the waterproof and dust proof properties of the control box and may result in damage to its internal components.
3) A Faston terminal on the inrush current resistor has a locking function. Check that the terminal is securely locked in place. Press the tab in the middle of the terminal to remove it.
4) Control box houses high temperature parts. Be well careful even after turning off the power source.
5) **Perform the service after disconnecting the relay connector in the INV box (RYFAN1 and RYFAN2). Before plugging in or unplugging connectors, check that the outdoor unit fan is not rotating and that the voltage across Pin 1 (+) and Pin 5 (-) of connector RYPN in the INV box is 20 VDC or less. The capacitor may collect a charge and cause an electric shock when the outdoor unit fan rotates in windy conditions.** Refer to the wiring nameplate for details.
6) To connect wiring to TB7, check that the voltage is 20 VDC or below.
7) After servicing, reconnect the relay connector (RYFAN1 and RYFAN2) in the INV box as it was.
8) When opening or closing the front panel of the control box, do not touch any of the internal components. Before inspecting inside the control box, turn off the power to the unit, leave it turned off for at least 10 minutes, and check that the voltage across Pin 1 (+) and Pin 5 (-) of connector RYPN in the INV box is 20 VDC or less. It takes about 10 minutes to discharge electricity after the power supply is turned off.
9) When the power is on, the compressor or heater is energized even while the compressor is stopped. Before turning on the power, disconnect all power supply wires from the compressor terminal block, and measure the insulation resistance of the compressor. Check the compressor for a ground fault. If the insulation resistance is 1.0 MΩ or below, connect all power supply wires to the compressor and turn on the power to the outdoor unit. The liquid refrigerant in the compressor will evaporate by energizing the compressor or the heater.

(TNU)

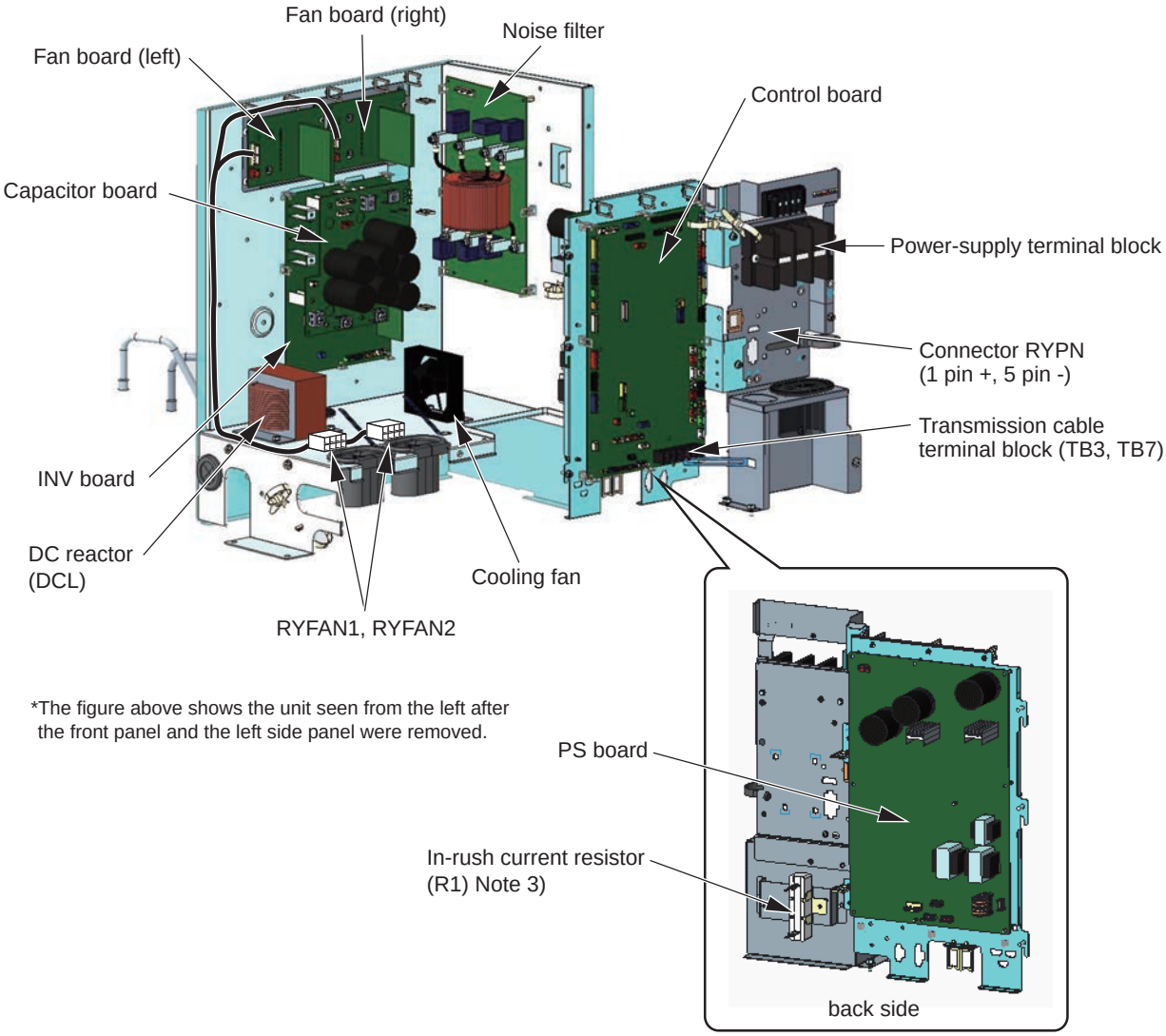

*The figure above shows the unit seen from the left after the front panel and the left side panel were removed.

Note

1) Refrigerant pipes are connected to the back of the control box. Do not forcibly pull out the control box. Doing so may result in deformation of the pipe.
2) Exercise caution not to damage the front panel of the control box. Damage to this part affect the waterproof and dust proof properties of the control box and may result in damage to its internal components.
3) A Faston terminal on the inrush current resistor has a locking function. Check that the terminal is securely locked in place. Press the tab in the middle of the terminal to remove it.
4) Control box houses high temperature parts. Be well careful even after turning off the power source.
5) **Perform the service after disconnecting the relay connector in the INV box (RYFAN1 and RYFAN2). Before plugging in or unplugging connectors, check that the outdoor unit fan is not rotating and that the voltage across Pin 1 (+) and Pin 5 (-) of connector RYPN in the INV box is 20 VDC or less. The capacitor may collect a charge and cause an electric shock when the outdoor unit fan rotates in windy conditions.** Refer to the wiring nameplate for details.
6) To connect wiring to TB7, check that the voltage is 20 VDC or below.
7) After servicing, reconnect the relay connector (RYFAN1 and RYFAN2) in the INV box as it was.
8) When opening or closing the front panel of the control box, do not touch any of the internal components. Before inspecting inside the control box, turn off the power to the unit, leave it turned off for at least 10 minutes, and check that the voltage across Pin 1 (+) and Pin 5 (-) of connector RYPN in the INV box is 20 VDC or less. It takes about 10 minutes to discharge electricity after the power supply is turned off.
9) When the power is on, the compressor or heater is energized even while the compressor is stopped. Before turning on the power, disconnect all power supply wires from the compressor terminal block, and measure the insulation resistance of the compressor. Check the compressor for a ground fault. If the insulation resistance is 1.0 MΩ or below, connect all power supply wires to the compressor and turn on the power to the outdoor unit. The liquid refrigerant in the compressor will evaporate by energizing the compressor or the heater.

(3) PURY-EP168, EP192, EP216, EP240

(YNU)

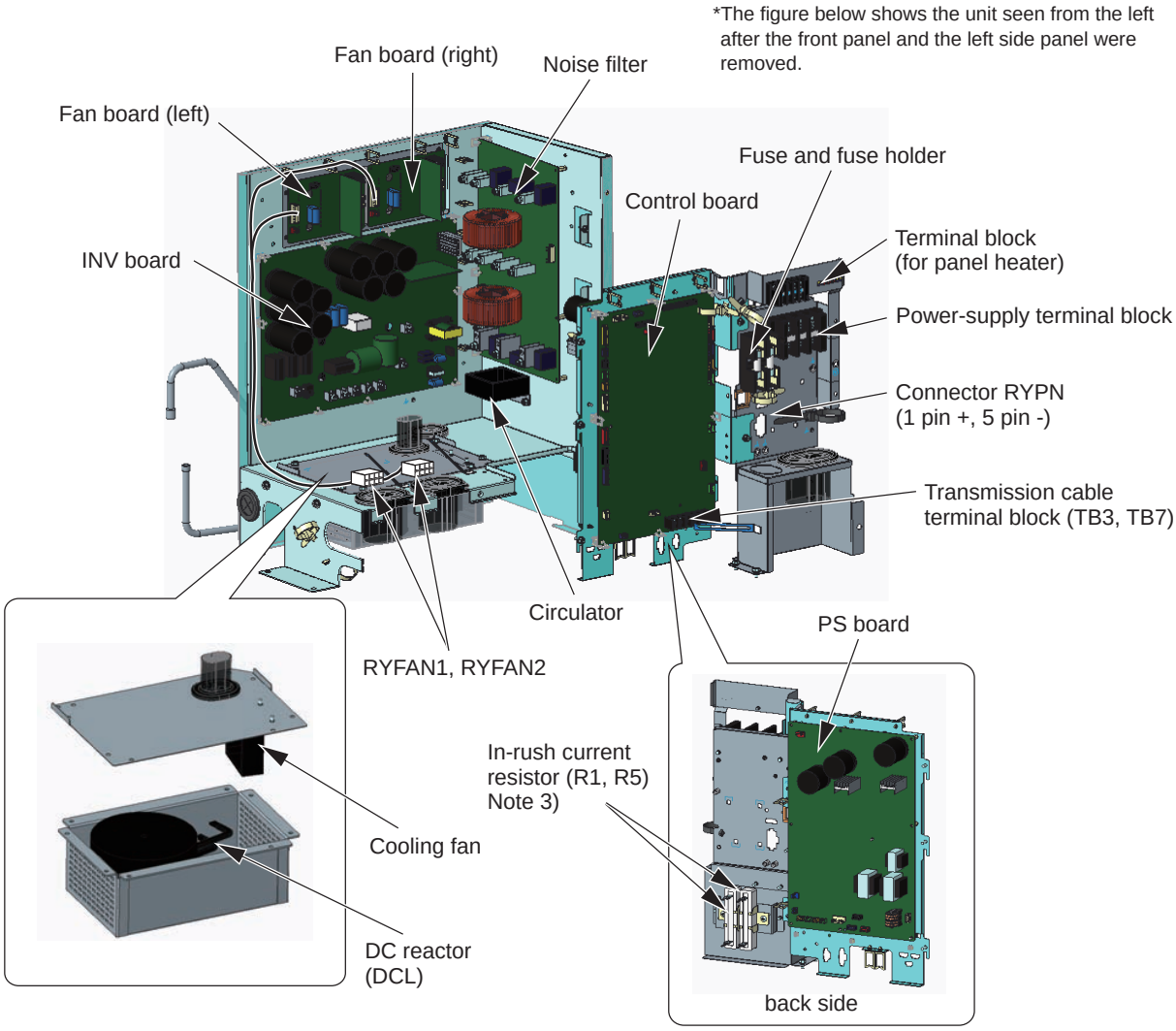

Note

1) Refrigerant pipes are connected to the back of the control box. Do not forcibly pull out the control box. Doing so may result in deformation of the pipe.
2) Exercise caution not to damage the front panel of the control box. Damage to this part affect the waterproof and dust proof properties of the control box and may result in damage to its internal components.
3) A Faston terminal on the inrush current resistor has a locking function. Check that the terminal is securely locked in place. Press the tab in the middle of the terminal to remove it.
4) Control box houses high temperature parts. Be well careful even after turning off the power source.
5) **Perform the service after disconnecting the relay connector in the INV box (RYFAN1 and RYFAN2). Before plugging in or unplugging connectors, check that the outdoor unit fan is not rotating and that the voltage across Pin 1 (+) and Pin 5 (-) of connector RYPN in the INV box is 20 VDC or less. The capacitor may collect a charge and cause an electric shock when the outdoor unit fan rotates in windy conditions.** Refer to the wiring nameplate for details.
6) To connect wiring to TB7, check that the voltage is 20 VDC or below.
7) After servicing, reconnect the relay connector (RYFAN1 and RYFAN2) in the INV box as it was.
8) When opening or closing the front panel of the control box, do not touch any of the internal components. Before inspecting inside the control box, turn off the power to the unit, leave it turned off for at least 10 minutes, and check that the voltage across Pin 1 (+) and Pin 5 (-) of connector RYPN in the INV box is 20 VDC or less. It takes about 10 minutes to discharge electricity after the power supply is turned off.
9) When the power is on, the compressor or heater is energized even while the compressor is stopped. Before turning on the power, disconnect all power supply wires from the compressor terminal block, and measure the insulation resistance of the compressor. Check the compressor for a ground fault. If the insulation resistance is 1.0 MΩ or below, connect all power supply wires to the compressor and turn on the power to the outdoor unit. The liquid refrigerant in the compressor will evaporate by energizing the compressor or the heater.

(TNU)

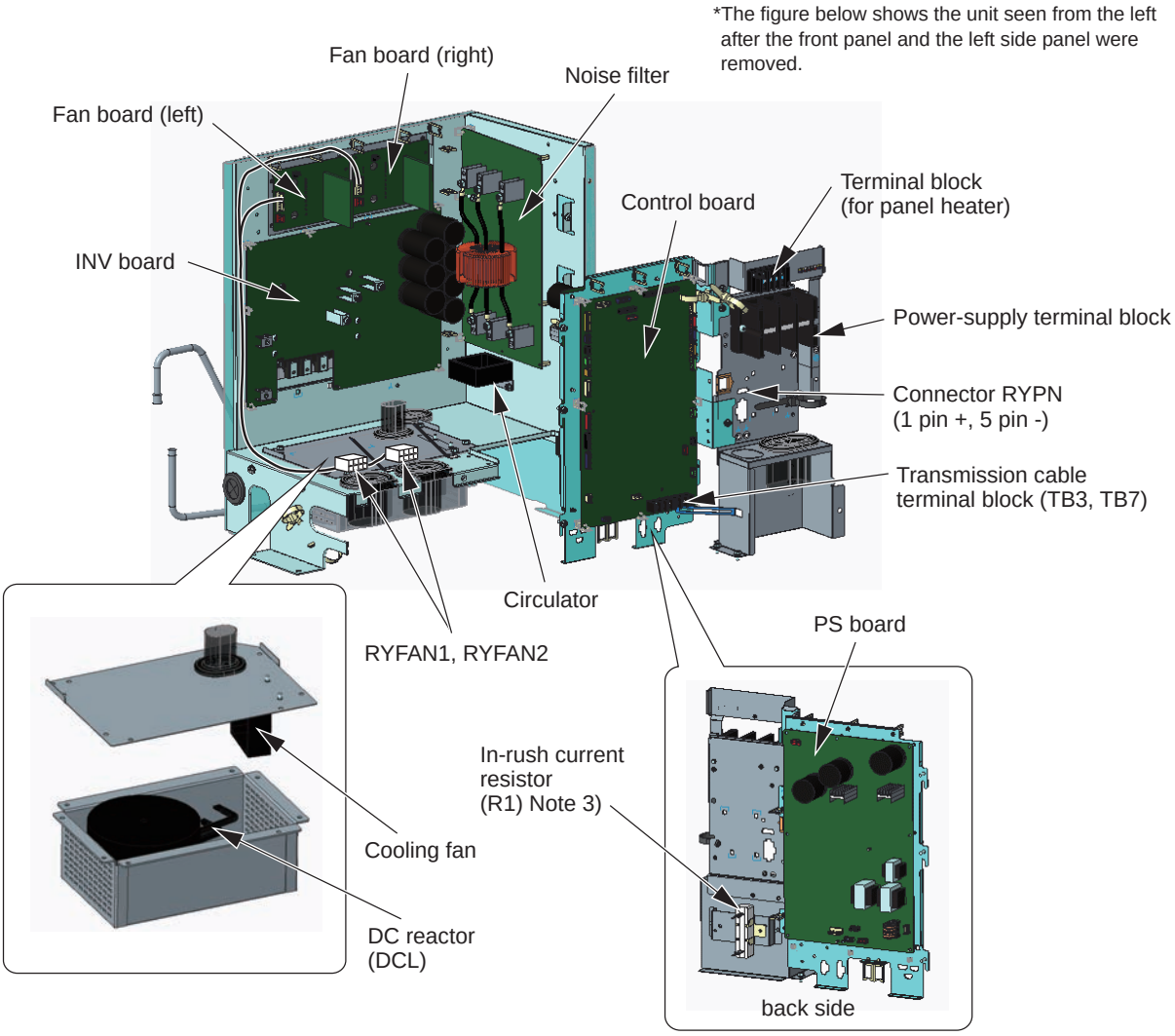

Note

1) Refrigerant pipes are connected to the back of the control box. Do not forcibly pull out the control box. Doing so may result in deformation of the pipe.
2) Exercise caution not to damage the front panel of the control box. Damage to this part affect the waterproof and dust proof properties of the control box and may result in damage to its internal components.
3) A Faston terminal on the inrush current resistor has a locking function. Check that the terminal is securely locked in place. Press the tab in the middle of the terminal to remove it.
4) Control box houses high temperature parts. Be well careful even after turning off the power source.
5) **Perform the service after disconnecting the relay connector in the INV box (RYFAN1 and RYFAN2). Before plugging in or unplugging connectors, check that the outdoor unit fan is not rotating and that the voltage across Pin 1 (+) and Pin 5 (-) of connector RYPN in the INV box is 20 VDC or less. The capacitor may collect a charge and cause an electric shock when the outdoor unit fan rotates in windy conditions.** Refer to the wiring nameplate for details.
6) To connect wiring to TB7, check that the voltage is 20 VDC or below.
7) After servicing, reconnect the relay connector (RYFAN1 and RYFAN2) in the INV box as it was.
8) When opening or closing the front panel of the control box, do not touch any of the internal components. Before inspecting inside the control box, turn off the power to the unit, leave it turned off for at least 10 minutes, and check that the voltage across Pin 1 (+) and Pin 5 (-) of connector RYPN in the INV box is 20 VDC or less. It takes about 10 minutes to discharge electricity after the power supply is turned off.
9) When the power is on, the compressor or heater is energized even while the compressor is stopped. Before turning on the power, disconnect all power supply wires from the compressor terminal block, and measure the insulation resistance of the compressor. Check the compressor for a ground fault. If the insulation resistance is 1.0 MΩ or below, connect all power supply wires to the compressor and turn on the power to the outdoor unit. The liquid refrigerant in the compressor will evaporate by energizing the compressor or the heater.

4-2 Outdoor Unit Circuit Board Components

4-2-1 Control Board

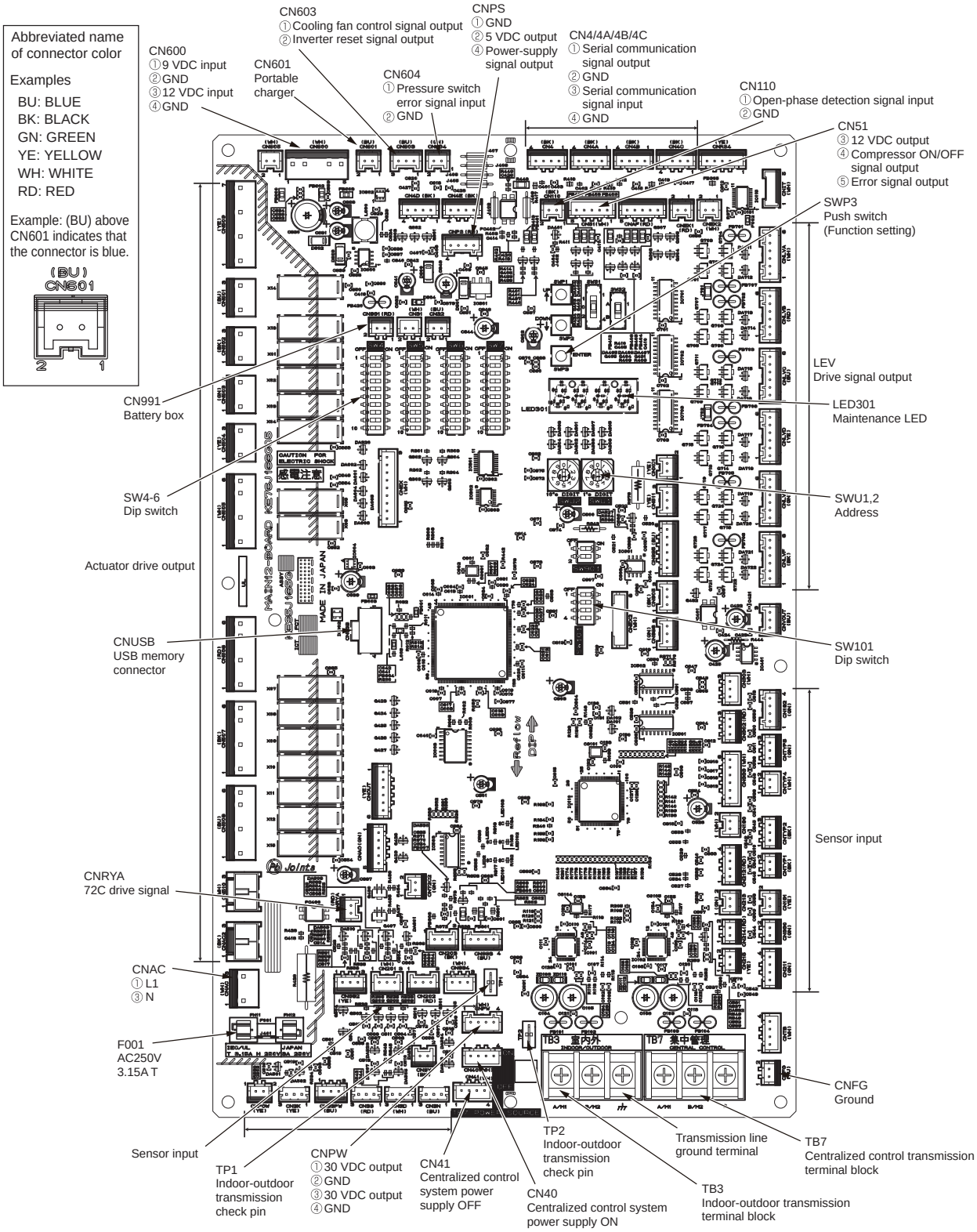

*For information about the display of SW4 function settings, refer to the following page(s). [5-1-1 Outdoor Unit Switch Functions and Factory Settings]

4-2-2 Power-supply board (PS Board)

(1) PURY-(E)P72T(Y)NU-A/A1

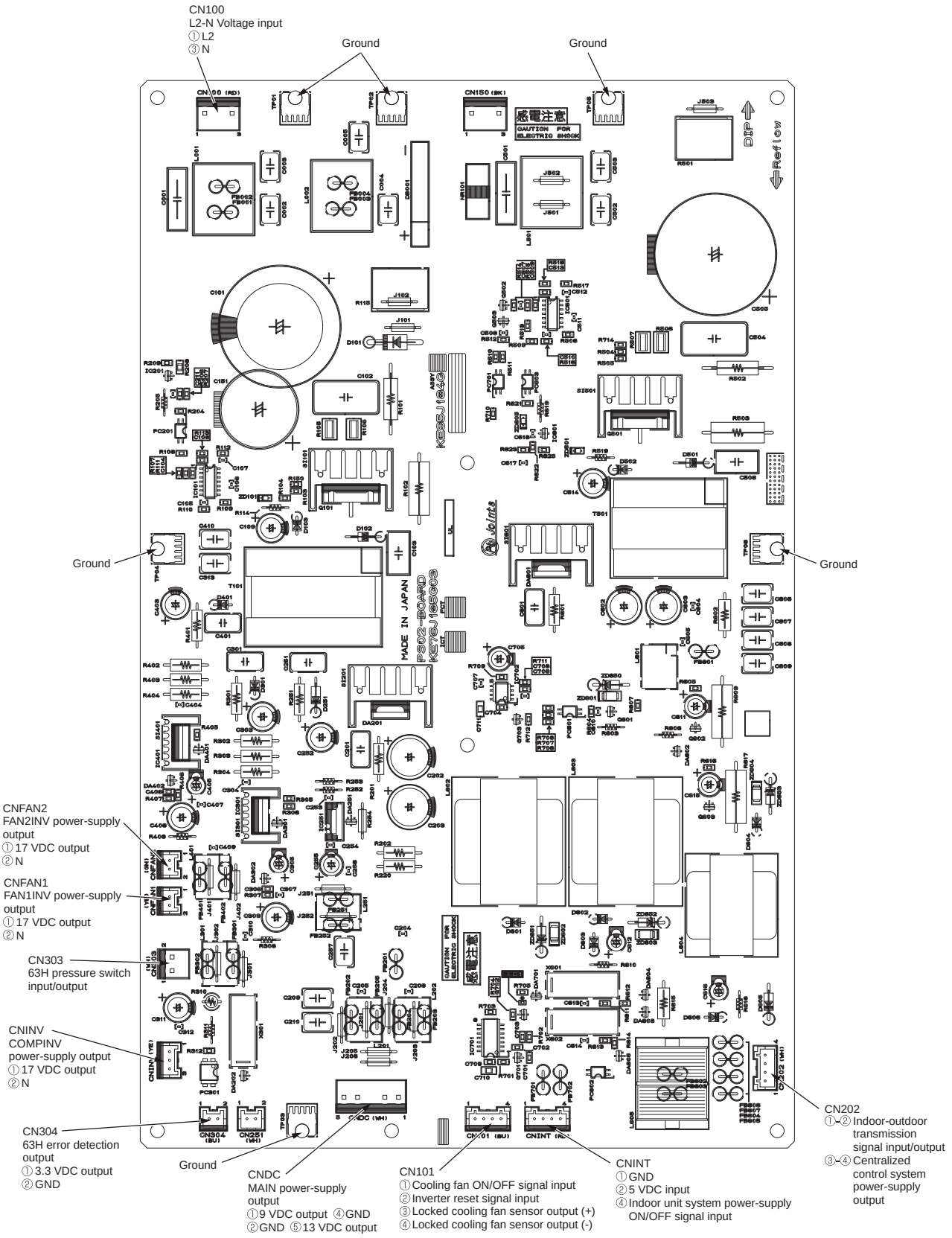

(2) PURY-(E)P96, (E)P120, (E)P144, (E)P168, EP192, EP216, EP240T(Y)NU-A/A1

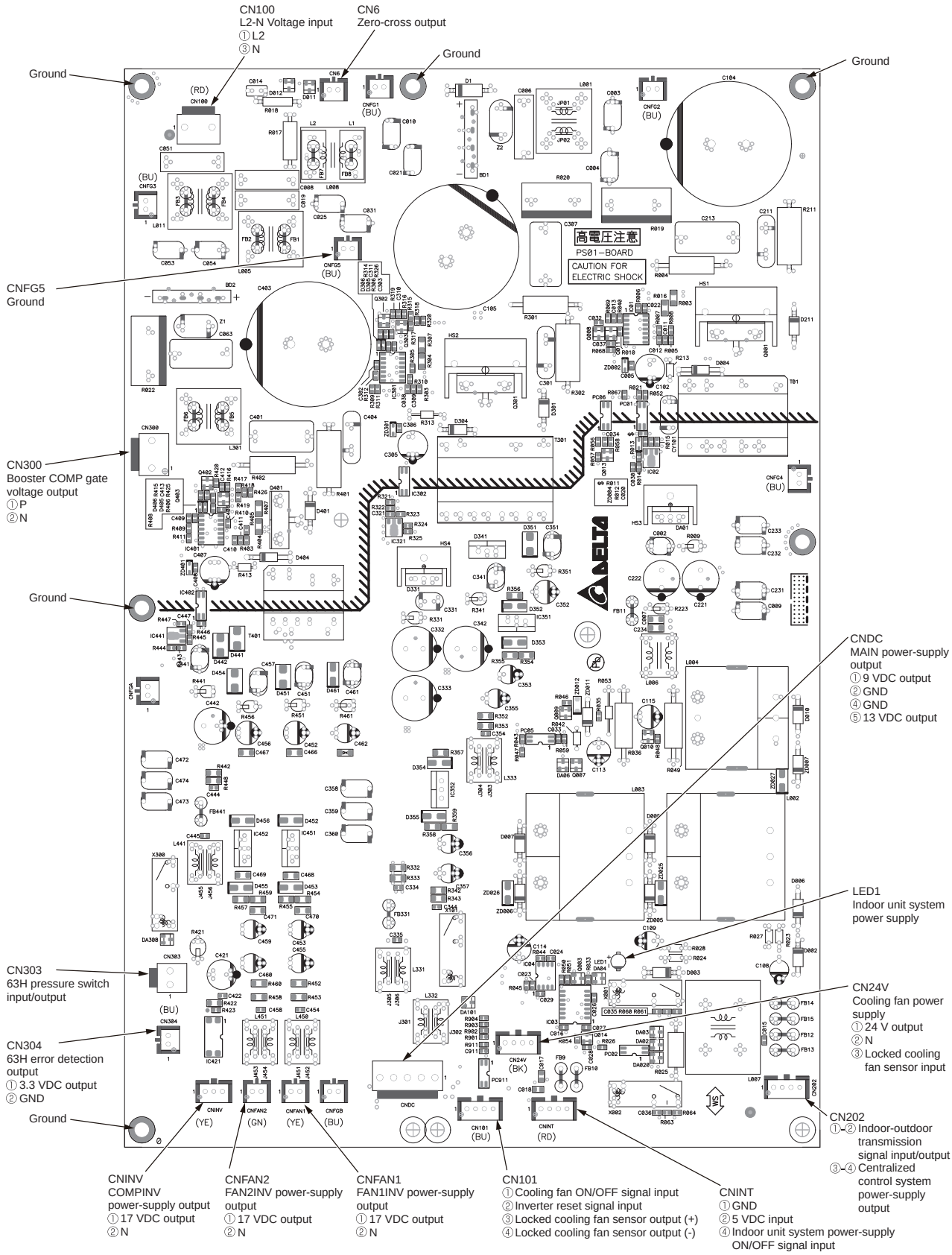

4-2-3 Inverter Board (INV Board)

(1) PURY-(E)P72YNU-A/A1

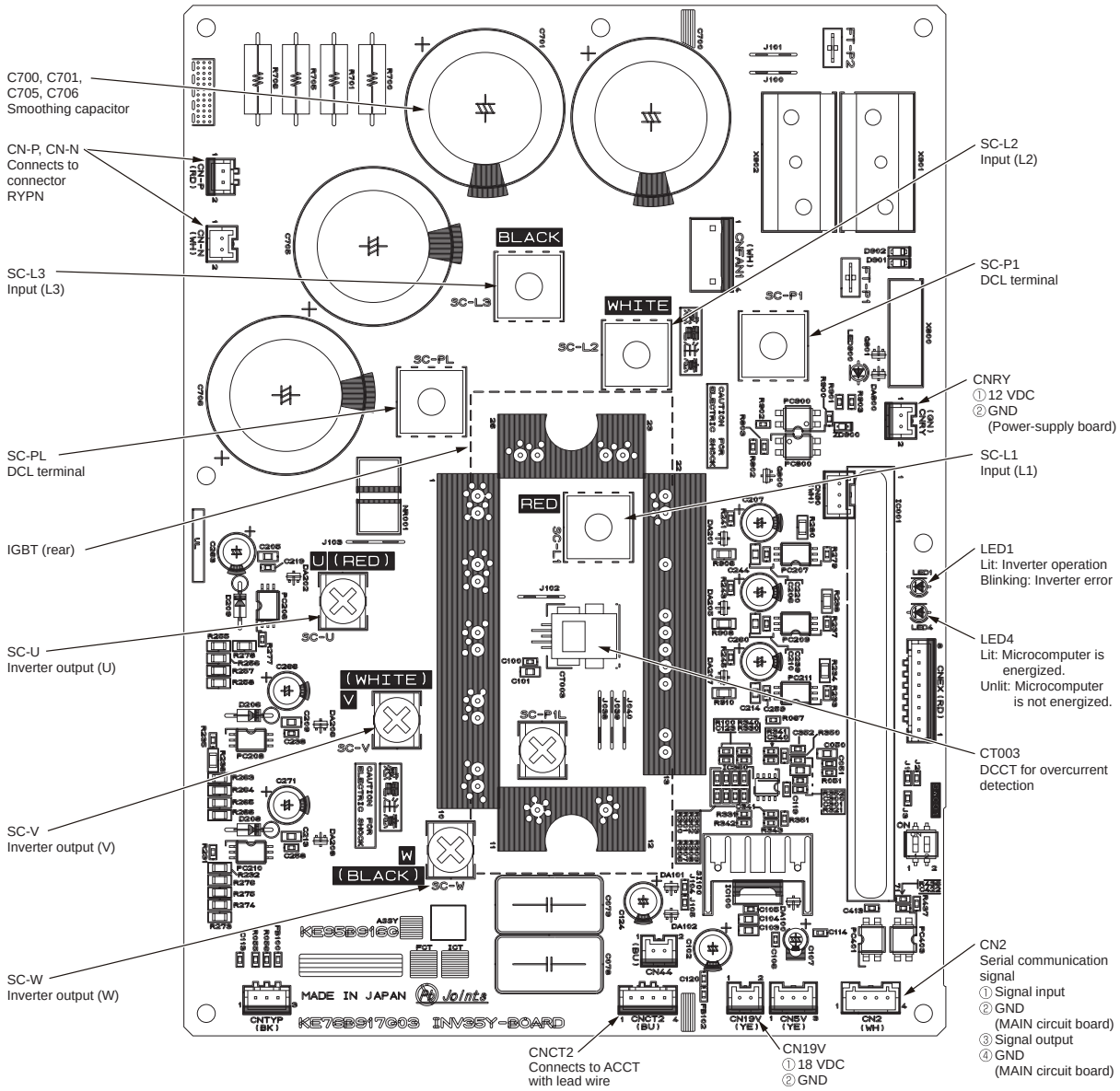

Note

1) When opening or closing the front panel of the control box, do not let it come into contact with any of the internal components. Before inspecting the inside of the control box, turn off the power, keep the unit off for at least 10 minutes, and confirm that the voltage across pins 1 and 5 of connector RYPN has dropped to 20 VDC or less. It takes about 10 minutes to discharge electricity after the power supply is turned off.
2) A Faston terminal on the inrush current resistor has a locking function. Make sure the cable heads are securely locked in place. Press the tab on the terminals to remove them.
3) Control box houses high temperature parts. Be well careful even after turning off the power source.
4) **Perform the service after disconnecting the relay connector (RYFAN1). Before plugging in or unplugging connectors, check that the outdoor unit fan is not rotating and that the voltage across pins 1 and 5 of connector RYPN is 20 VDC or less. The capacitor may collect a charge and cause an electric shock when the outdoor unit fan rotates in windy conditions.** Refer to the wiring nameplate for details.
5) After servicing, reconnect the relay connector (RYFAN1) of the fan as it was.
6) When the power is on, the compressor or heater is energized even while the compressor is stopped. Before turning on the power, disconnect all power supply wires from the compressor terminal block, and measure the insulation resistance of the compressor.Check the compressor for a ground fault. If the insulation resistance is 1.0 MΩ or below, connect all power supply wires to the compressor and turn on the power to the outdoor unit. The liquid refrigerant in the compressor will evaporate by energizing the compressor or the heater.

(2) PURY-(E)P96, (E)P120, (E)P144, P168YNU-A/A1

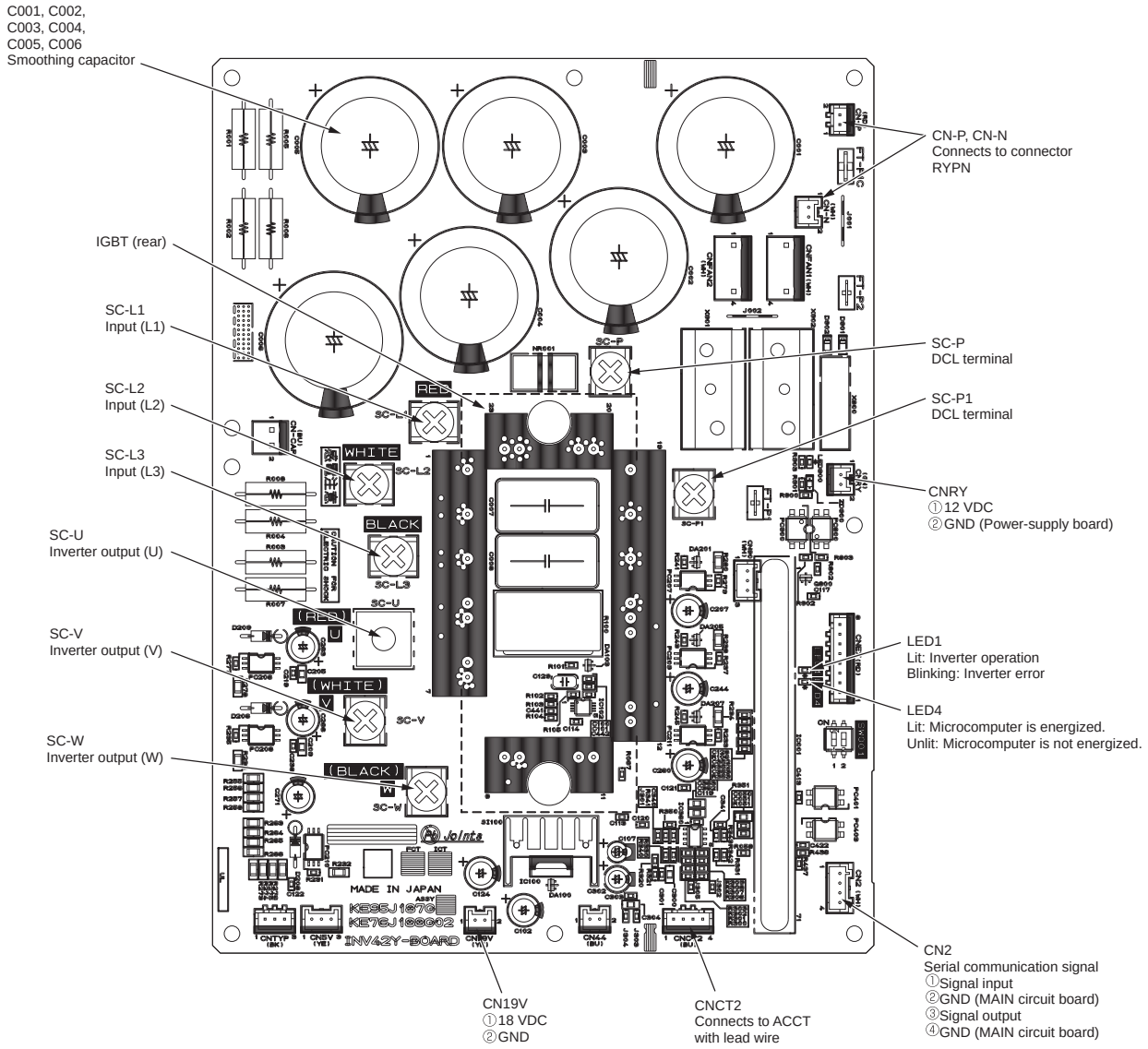

Note

1) When opening or closing the front panel of the control box, do not let it come into contact with any of the internal components. Before inspecting the inside of the control box, turn off the power, keep the unit off for at least 10 minutes, and confirm that the voltage across pins 1 and 5 of connector RYPN has dropped to 20 VDC or less. It takes about 10 minutes to discharge electricity after the power supply is turned off.
2) A Faston terminal on the inrush current resistor has a locking function. Make sure the cable heads are securely locked in place. Press the tab on the terminals to remove them.
3) Control box houses high temperature parts. Be well careful even after turning off the power source.
4) **Perform the service after disconnecting the relay connector (RYFAN1, RYFAN2). Before plugging in or unplugging connectors, check that the outdoor unit fan is not rotating and that the voltage across pins 1 and 5 of connector RYPN is 20 VDC or less. The capacitor may collect a charge and cause an electric shock when the outdoor unit fan rotates in windy conditions.** Refer to the wiring nameplate for details.
5) After servicing, reconnect the relay connector (RYFAN1, RYFAN2) of the fan as it was.
6) When the power is on, the compressor or heater is energized even while the compressor is stopped. Before turning on the power, disconnect all power supply wires from the compressor terminal block, and measure the insulation resistance of the compressor.
   Check the compressor for a ground fault. If the insulation resistance is 1.0 MΩ or below, connect all power supply wires to the compressor and turn on the power to the outdoor unit. The liquid refrigerant in the compressor will evaporate by energizing the compressor or the heater.

(3) PURY-EP168, EP192, EP216, EP240YNU-A/A1

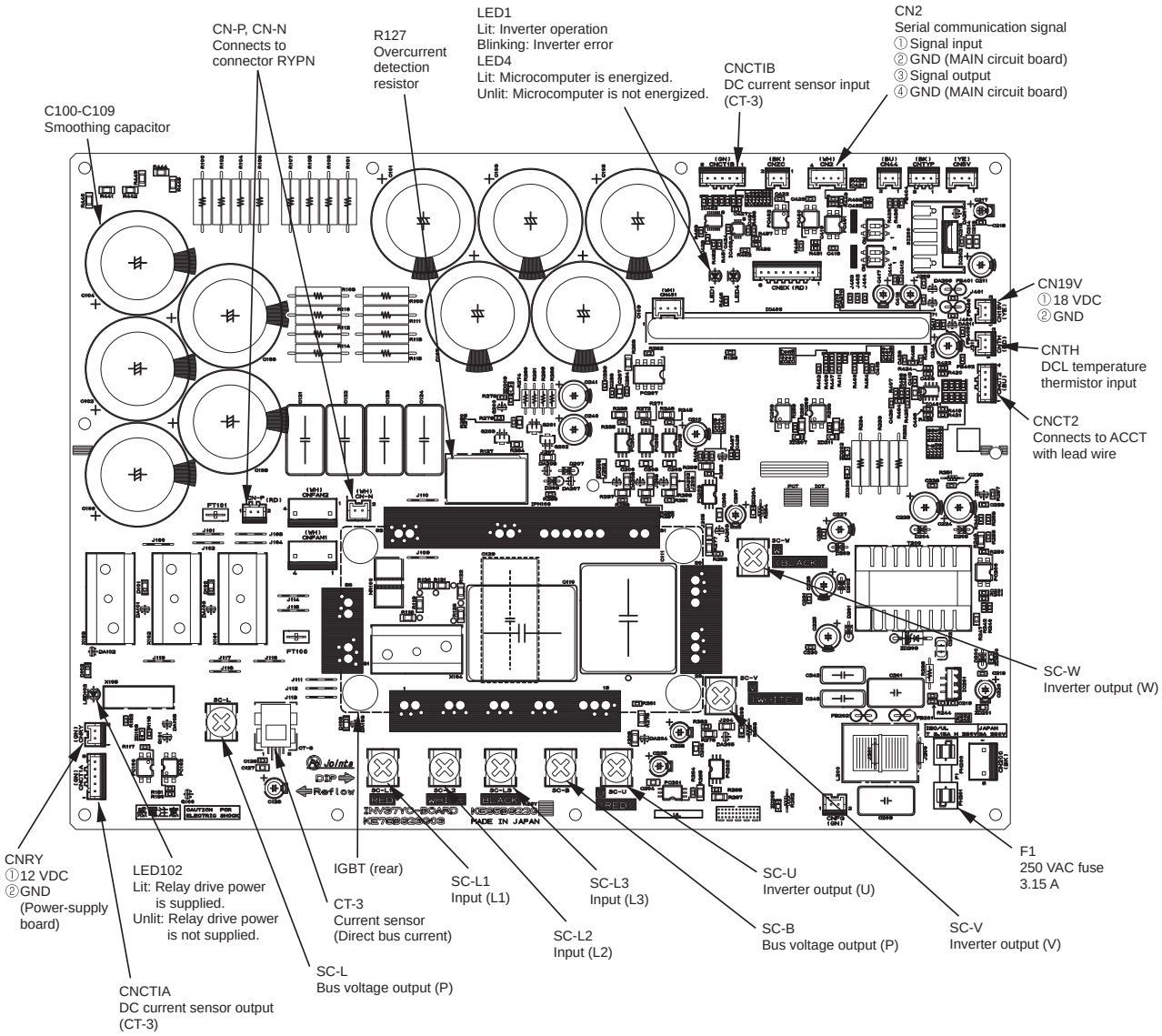

Note

1) When opening or closing the front panel of the control box, do not let it come into contact with any of the internal components. Before inspecting the inside of the control box, turn off the power, keep the unit off for at least 10 minutes, and confirm that the voltage across pins 1 and 5 of connector RYPN has dropped to 20 VDC or less. It takes about 10 minutes to discharge electricity after the power supply is turned off.
2) A Faston terminal on the inrush current resistor has a locking function. Make sure the cable heads are securely locked in place. Press the tab on the terminals to remove them.
3) Control box houses high temperature parts. Be well careful even after turning off the power source.
4) **Perform the service after disconnecting the relay connector (RYFAN1, RYFAN2). Before plugging in or unplugging connectors, check that the outdoor unit fan is not rotating and that the voltage across pins 1 and 5 of connector RYPN is 20 VDC or less. The capacitor may collect a charge and cause an electric shock when the outdoor unit fan rotates in windy conditions.** Refer to the wiring nameplate for details.
5) After servicing, reconnect the relay connector (RYFAN1, RYFAN2) of the fan as it was.
6) When the power is on, the compressor or heater is energized even while the compressor is stopped. Before turning on the power, disconnect all power supply wires from the compressor terminal block, and measure the insulation resistance of the compressor.
   Check the compressor for a ground fault. If the insulation resistance is 1.0 MΩ or below, connect all power supply wires to the compressor and turn on the power to the outdoor unit. The liquid refrigerant in the compressor will evaporate by energizing the compressor or the heater.

(4) PURY-(E)P72, (E)P96, (E)P120, (E)P144, P168TNU-A/A1

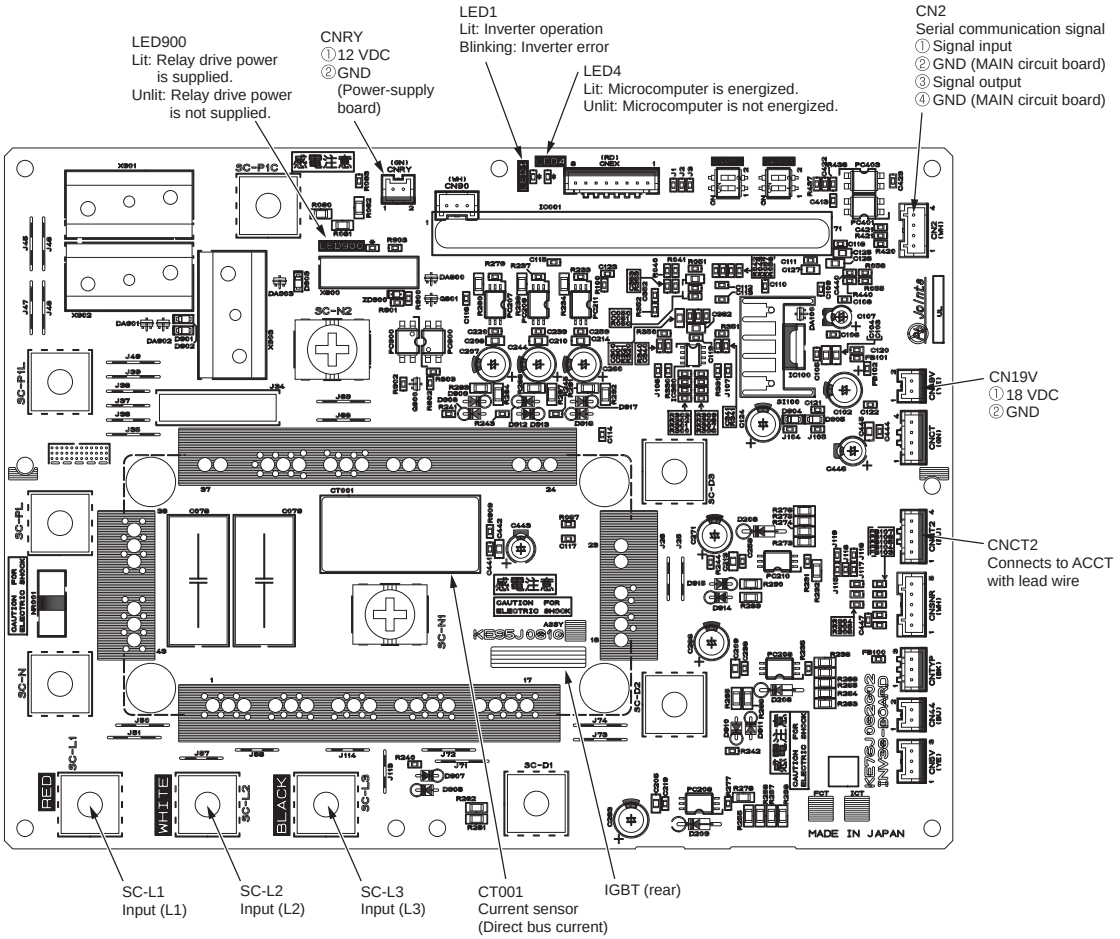

Note

1) When opening or closing the front panel of the control box, do not let it come into contact with any of the internal components. Before inspecting the inside of the control box, turn off the power, keep the unit off for at least 10 minutes, and confirm that the voltage across pins 1 and 5 of connector RYPN has dropped to 20 VDC or less. It takes about 10 minutes to discharge electricity after the power supply is turned off.
2) A Faston terminal on the inrush current resistor has a locking function. Make sure the cable heads are securely locked in place. Press the tab on the terminals to remove them.
3) Control box houses high temperature parts. Be well careful even after turning off the power source.
4) **Perform the service after disconnecting the relay connector (RYFAN1, RYFAN2). Before plugging in or unplugging connectors, check that the outdoor unit fan is not rotating and that the voltage across pins 1 and 5 of connector RYPN is 20 VDC or less. The capacitor may collect a charge and cause an electric shock when the outdoor unit fan rotates in windy conditions.** Refer to the wiring nameplate for details.
5) After servicing, reconnect the relay connector (RYFAN1, RYFAN2) of the fan as it was.
6) When the power is on, the compressor or heater is energized even while the compressor is stopped. Before turning on the power, disconnect all power supply wires from the compressor terminal block, and measure the insulation resistance of the compressor.
   Check the compressor for a ground fault. If the insulation resistance is 1.0 MΩ or below, connect all power supply wires to the compressor and turn on the power to the outdoor unit. The liquid refrigerant in the compressor will evaporate by energizing the compressor or the heater.

(5) PURY-EP168, EP192, EP216, EP240TNU-A/A1

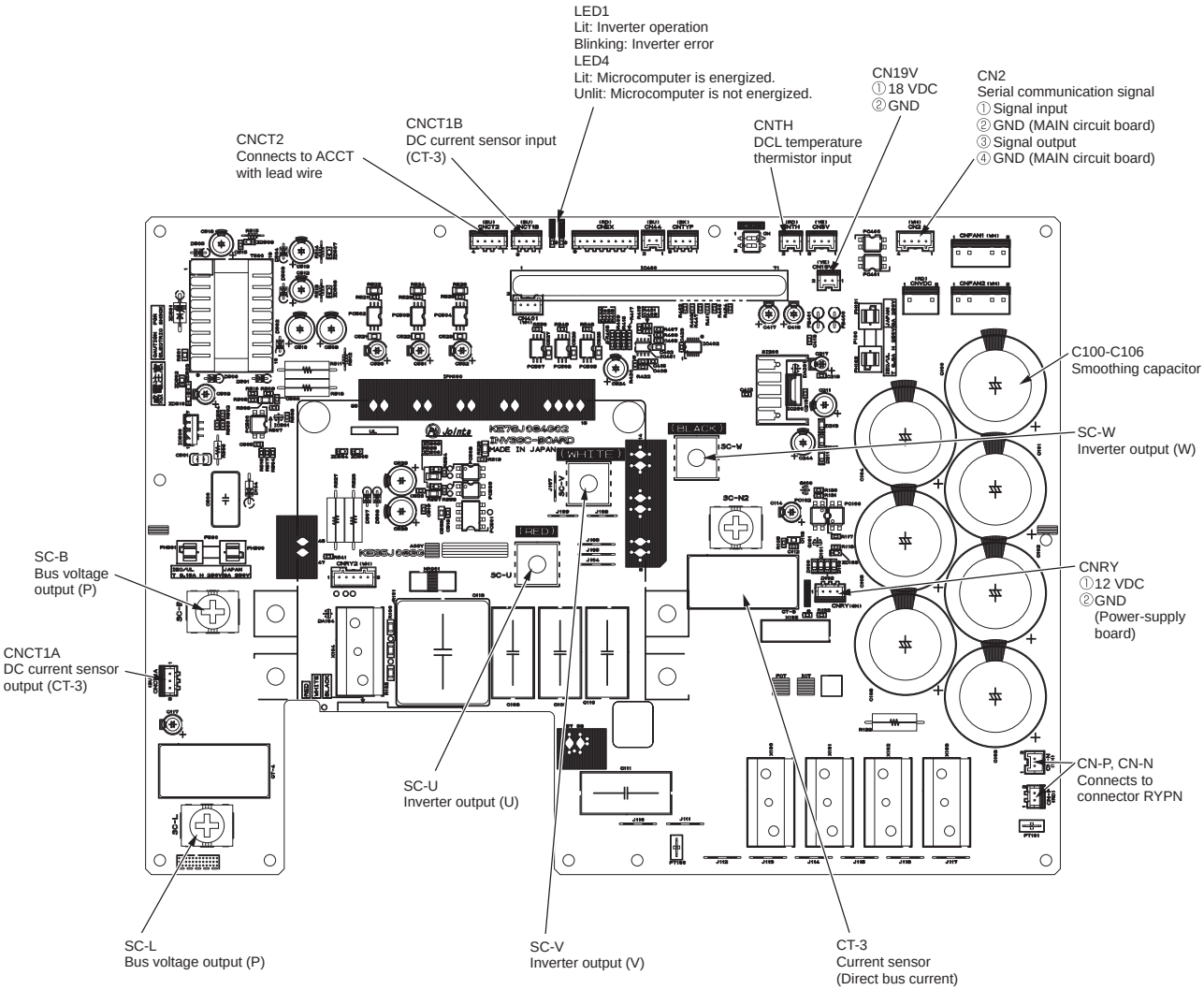

Note

1) When opening or closing the front panel of the control box, do not let it come into contact with any of the internal components. Before inspecting the inside of the control box, turn off the power, keep the unit off for at least 10 minutes, and confirm that the voltage across pins 1 and 5 of connector RYPN has dropped to 20 VDC or less. It takes about 10 minutes to discharge electricity after the power supply is turned off.
2) A Faston terminal on the inrush current resistor has a locking function. Make sure the cable heads are securely locked in place. Press the tab on the terminals to remove them.
3) Control box houses high temperature parts. Be well careful even after turning off the power source.
4) **Perform the service after disconnecting the relay connector (RYFAN1, RYFAN2). Before plugging in or unplugging connectors, check that the outdoor unit fan is not rotating and that the voltage across pins 1 and 5 of connector RYPN is 20 VDC or less. The capacitor may collect a charge and cause an electric shock when the outdoor unit fan rotates in windy conditions.** Refer to the wiring nameplate for details.
5) After servicing, reconnect the relay connector (RYFAN1, RYFAN2) of the fan as it was.
6) When the power is on, the compressor or heater is energized even while the compressor is stopped. Before turning on the power, disconnect all power supply wires from the compressor terminal block, and measure the insulation resistance of the compressor.
   Check the compressor for a ground fault. If the insulation resistance is 1.0 MΩ or below, connect all power supply wires to the compressor and turn on the power to the outdoor unit. The liquid refrigerant in the compressor will evaporate by energizing the compressor or the heater.

4-2-4 Fan Board

(1) YNU

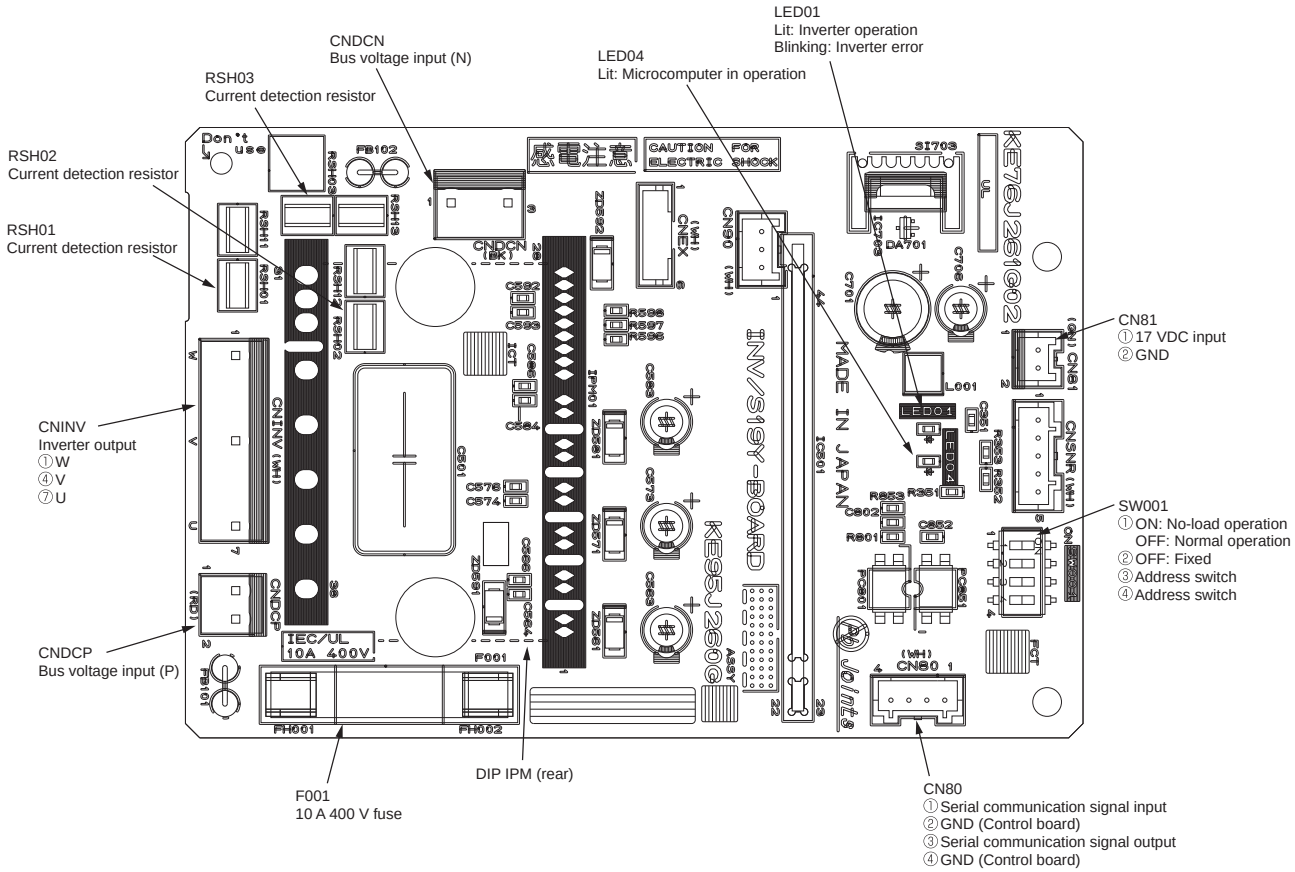

Note

1) When opening or closing the front panel of the control box, do not let it come into contact with any of the internal components. Before inspecting the inside of the control box, turn off the power, keep the unit off for at least 10 minutes, and confirm that the capacitor voltage (inverter main circuit) has dropped to 20 VDC or less. It takes about 10 minutes to discharge electricity after the power supply is turned off.
2) Control box houses high temperature parts. Be well careful even after turning off the power source.
3) **Perform the service after disconnecting the relay connector (RYFAN1, RYFAN2). Before plugging in or unplugging connectors, check that the outdoor unit fan is not rotating and that the voltage across pins 1 and 5 of connector RYPN is 20 VDC or less. The capacitor may collect a charge and cause an electric shock when the outdoor unit fan rotates in windy conditions.** Refer to the wiring nameplate for details.
4) To connect wiring to TB7, check that the voltage is 20 VDC or below.
5) After servicing, reconnect the relay connector (RYFAN1, RYFAN2) of the fan as it was.

(2) TNU

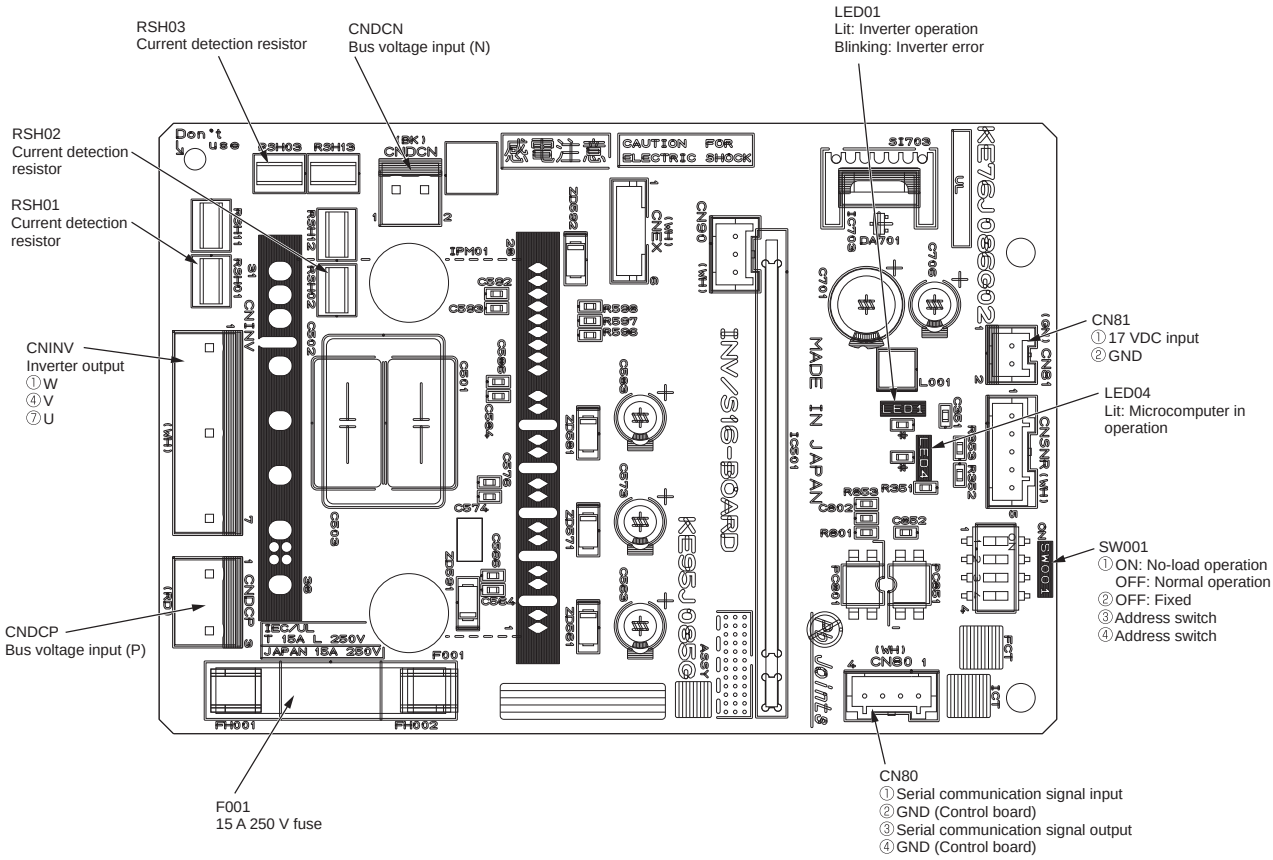

Note

1) When opening or closing the front panel of the control box, do not let it come into contact with any of the internal components. Before inspecting the inside of the control box, turn off the power, keep the unit off for at least 10 minutes, and confirm that the capacitor voltage (inverter main circuit) has dropped to 20 VDC or less. It takes about 10 minutes to discharge electricity after the power supply is turned off.
2) Control box houses high temperature parts. Be well careful even after turning off the power source.
3) **Perform the service after disconnecting the relay connector (RYFAN1, RYFAN2). Before plugging in or unplugging connectors, check that the outdoor unit fan is not rotating and that the voltage across pins 1 and 5 of connector RYPN is 20 VDC or less. The capacitor may collect a charge and cause an electric shock when the outdoor unit fan rotates in windy conditions.** Refer to the wiring nameplate for details.
4) To connect wiring to TB7, check that the voltage is 20 VDC or below.
5) After servicing, reconnect the relay connector (RYFAN1, RYFAN2) of the fan as it was.

4-2-5 Noise Filter

(1) PURY-(E)P72, (E)P96, (E)P120, (E)P144, P168YNU-A/A1

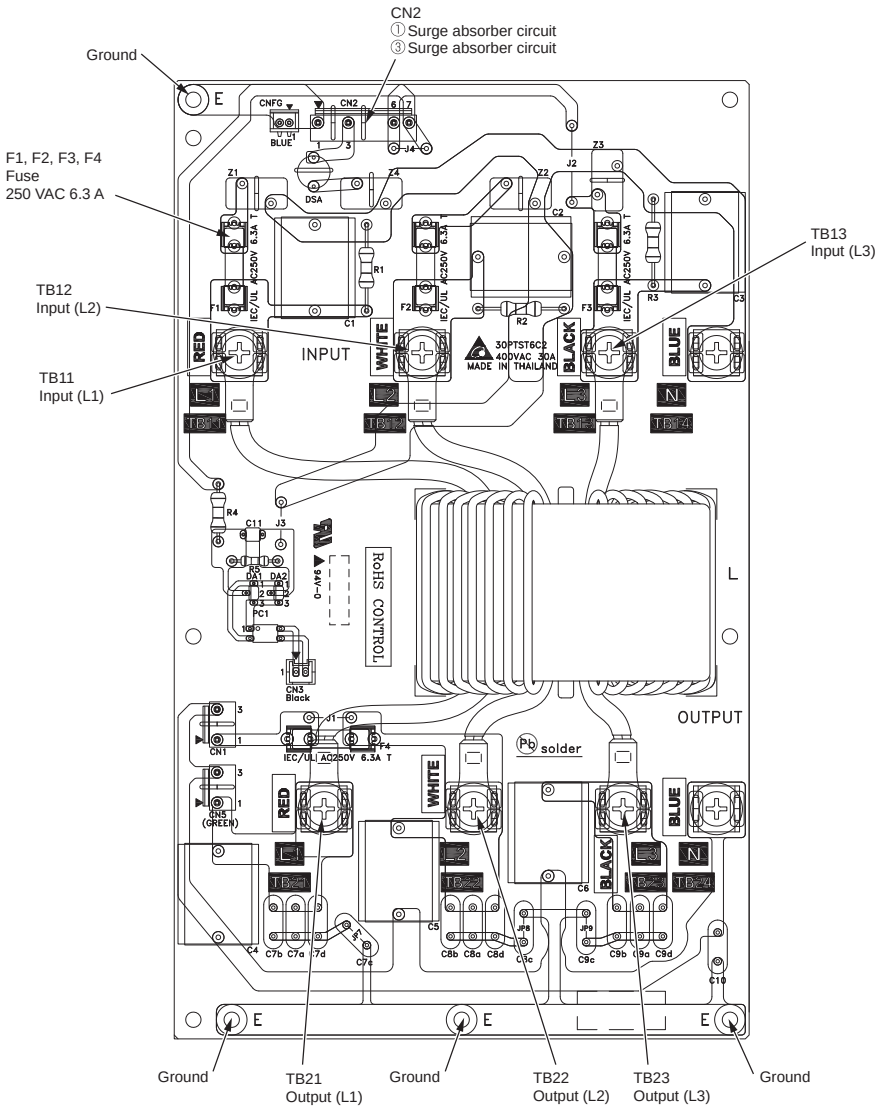

(2) PURY-EP168, EP192, EP216, EP240YNU-A/A1

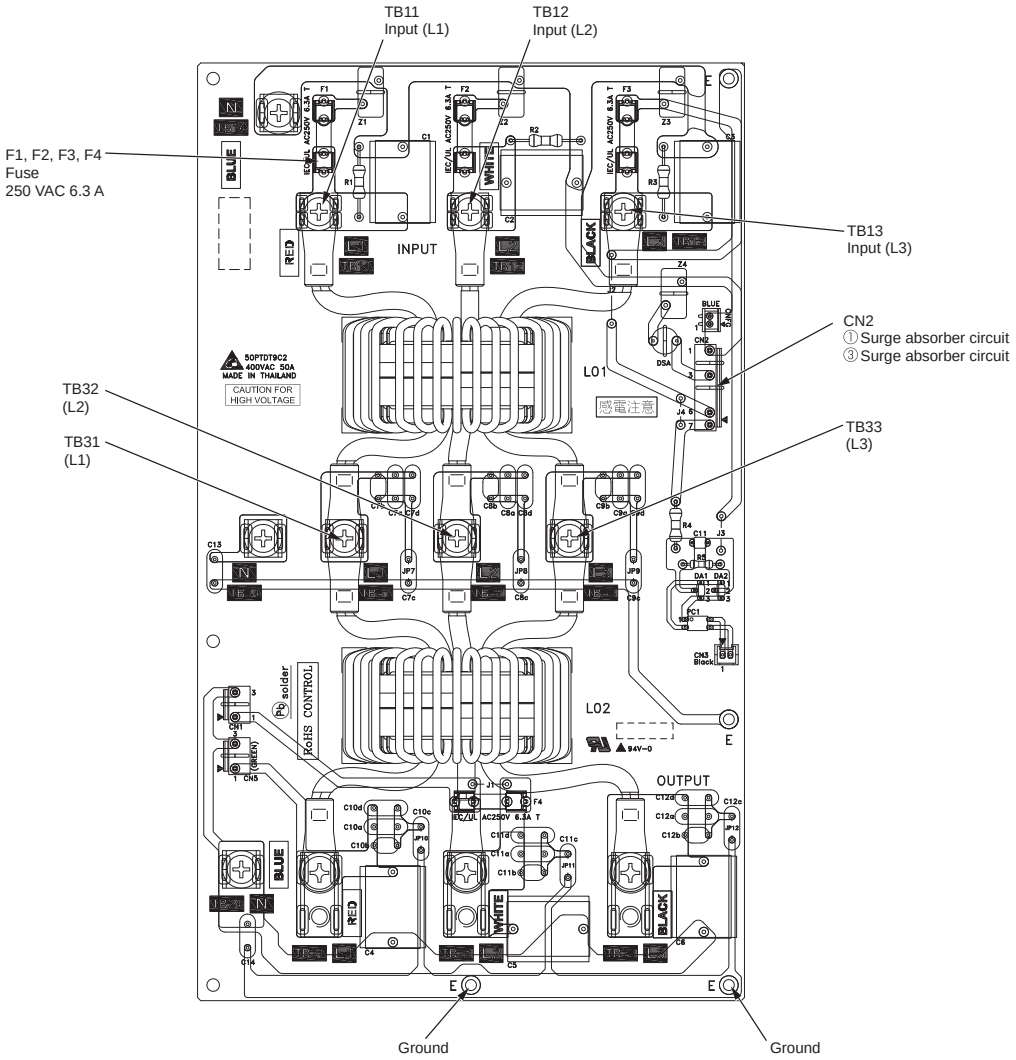

(3) PURY-(E)P72, (E)P96, (E)P120, (E)P144, P168TNU-A/A1

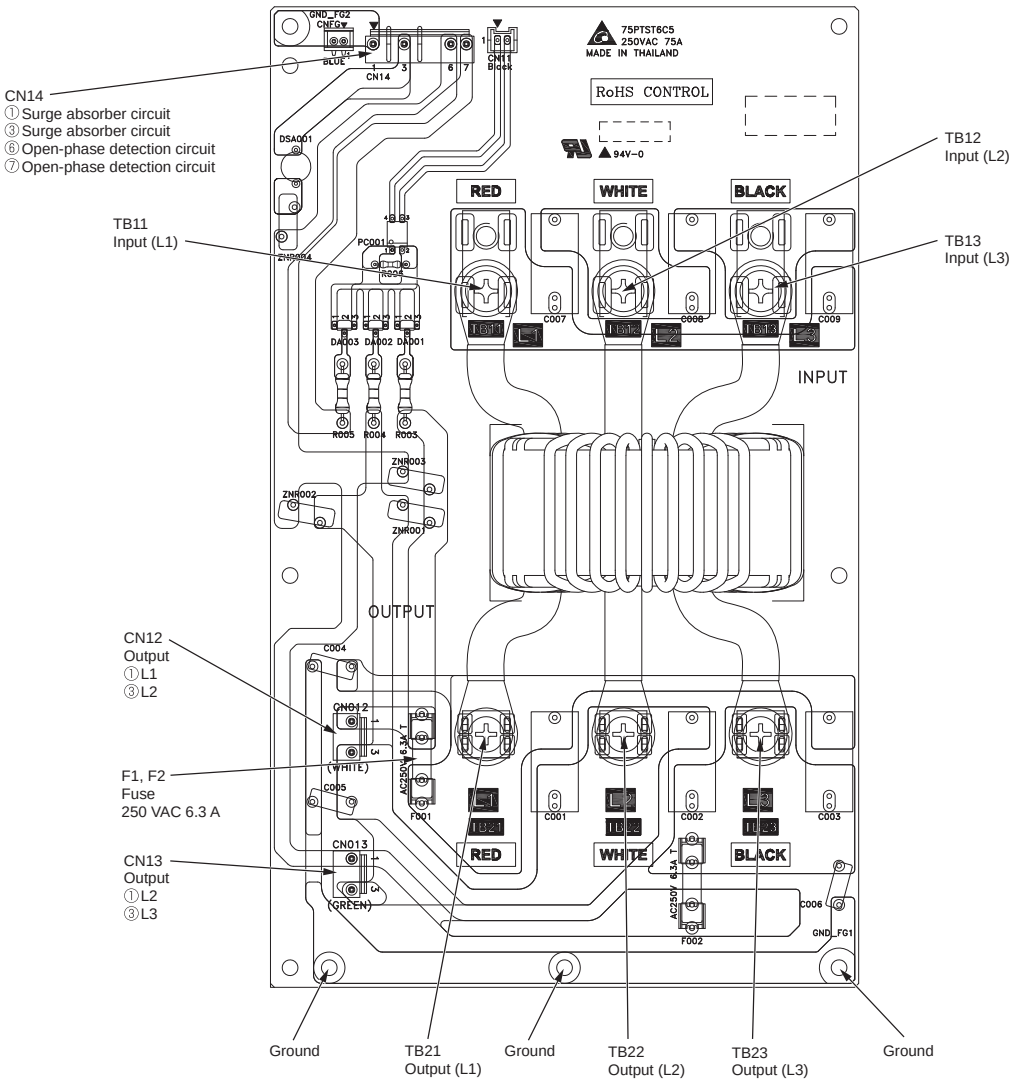

(4) PURY-EP168, EP192, EP216, EP240TNU-A/A1

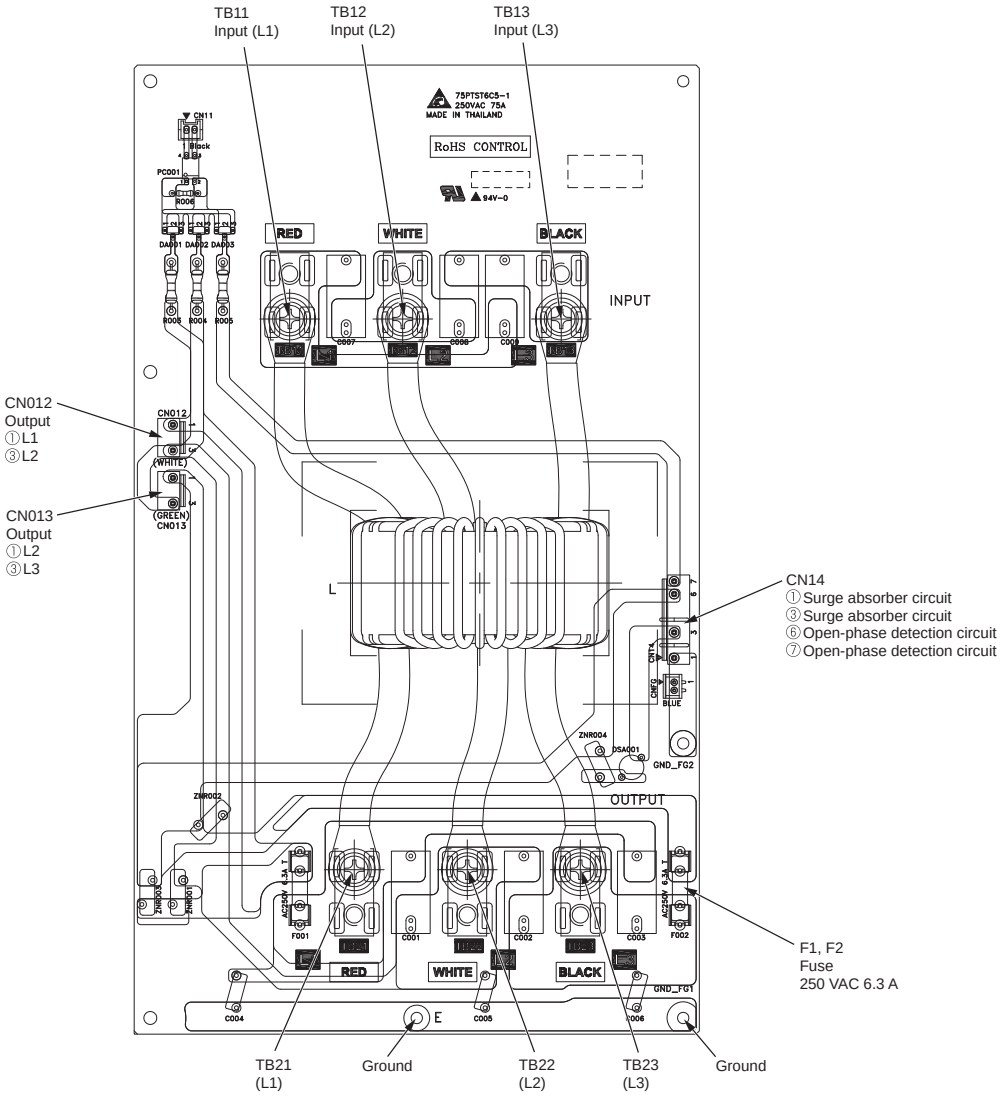

4-2-6 Capacitor Board (CAP Board)

(1) PURY-(E)P96, (E)P120, (E)P144, P168YNU-A/A1

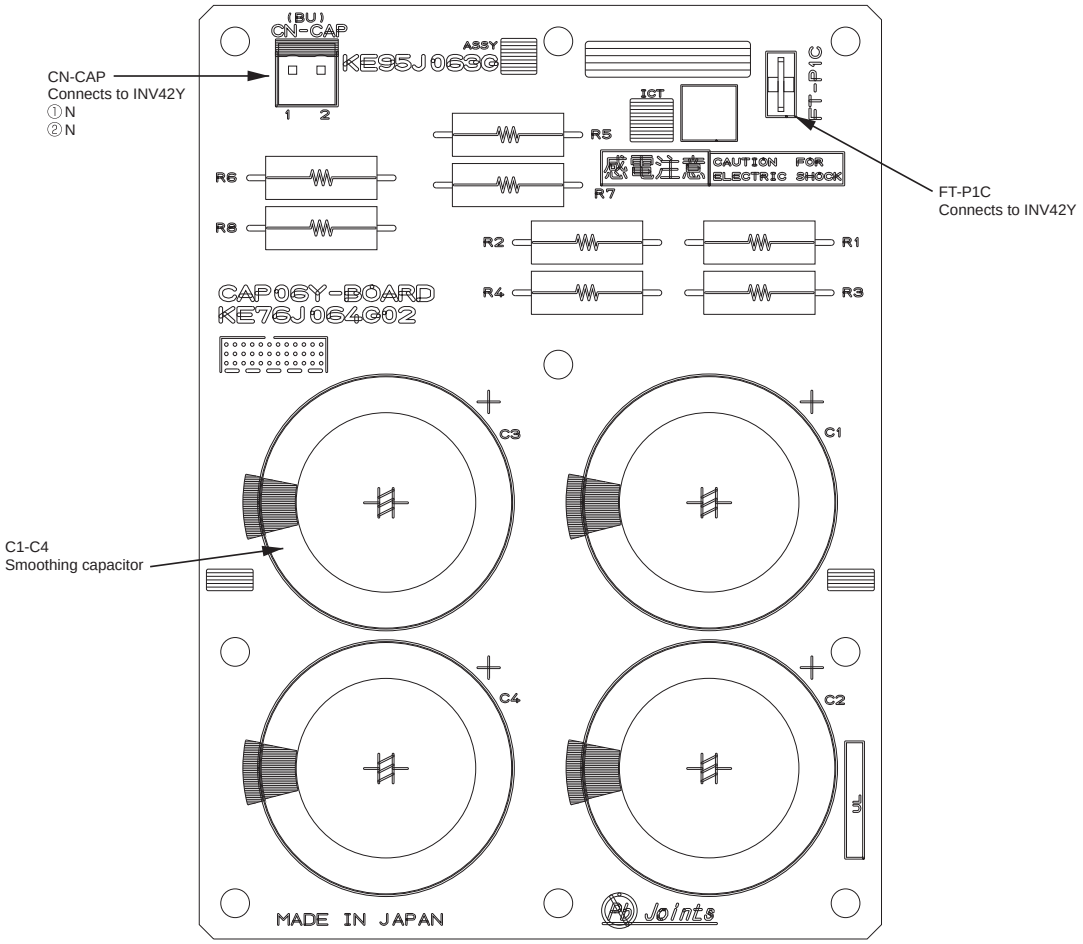

Note

1) When opening or closing the front panel of the control box, do not let it come into contact with any of the internal components. Before inspecting the inside of the control box, turn off the power, keep the unit off for at least 10 minutes, and confirm that the capacitor voltage (inverter main circuit) has dropped to 20 VDC or less. It takes about 10 minutes to discharge electricity after the power supply is turned off.
2) A Faston terminal has a locking function. Make sure the cable heads are securely locked in place. Press the tab on the terminals to remove them.
3) Control box houses high temperature parts. Be well careful even after turning off the power source.
4) **Perform the service after disconnecting the relay connector (RYFAN1, RYFAN2). Before plugging in or unplugging connectors, check that the outdoor unit fan is not rotating and that the voltage across pins 1 and 5 of connector RYPN is 20 VDC or less. The capacitor may collect a charge and cause an electric shock when the outdoor unit fan rotates in windy conditions.** Refer to the wiring nameplate for details.
5) After servicing, reconnect the relay connector (RYFAN1, RYFAN2) of the fan as it was.

(2) PURY-(E)P72, (E)P96, (E)P120, (E)P144, P168TNU-A/A1

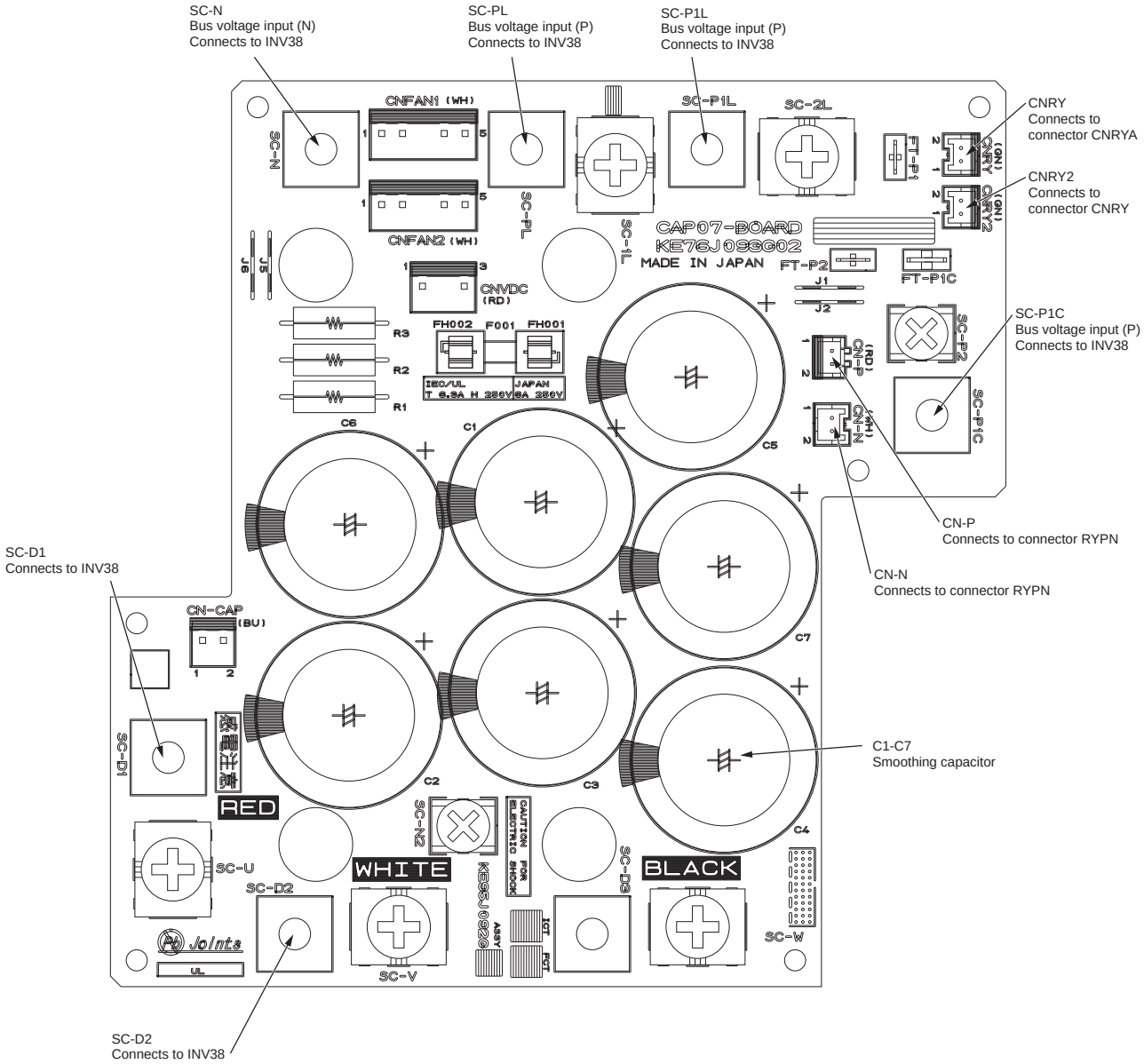

Note

1) When opening or closing the front panel of the control box, do not let it come into contact with any of the internal components. Before inspecting the inside of the control box, turn off the power, keep the unit off for at least 10 minutes, and confirm that the capacitor voltage (inverter main circuit) has dropped to 20 VDC or less. It takes about 10 minutes to discharge electricity after the power supply is turned off.
2) A Faston terminal on the inrush current resistor has a locking function. Make sure the cable heads are securely locked in place. Press the tab on the terminals to remove them.
3) Control box houses high temperature parts. Be well careful even after turning off the power source.
4) **Perform the service after disconnecting the relay connector (RYFAN1, RYFAN2). Before plugging in or unplugging connectors, check that the outdoor unit fan is not rotating and that the voltage across pins 1 and 5 of connector RYPN is 20 VDC or less. The capacitor may collect a charge and cause an electric shock when the outdoor unit fan rotates in windy conditions.** Refer to the wiring nameplate for details.
5) After servicing, reconnect the relay connector (RYFAN1, RYFAN2) of the fan as it was.

4-3 Outdoor Unit Electrical Wiring Diagrams

(1) PURY-(E)P72YNU-A

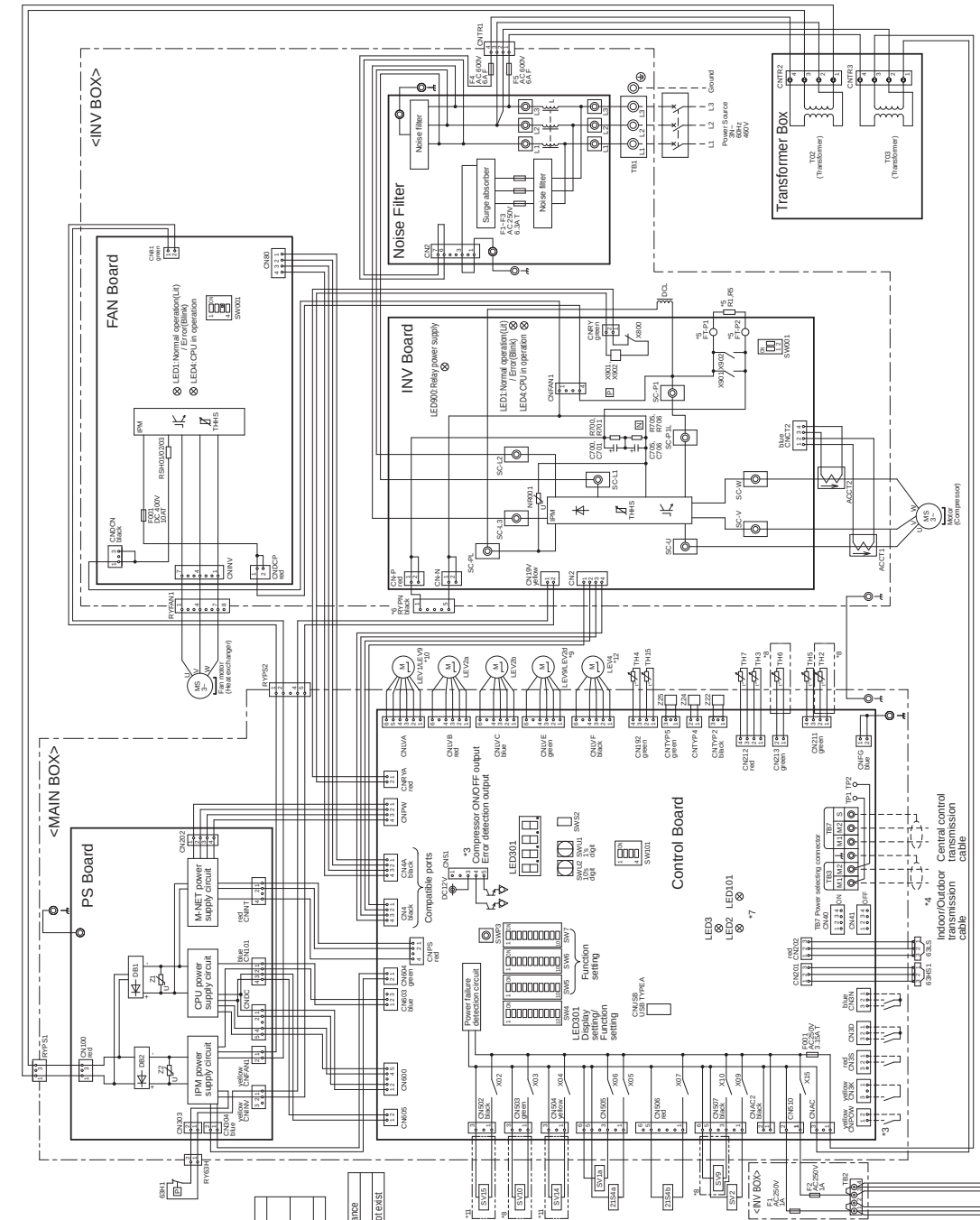

*1.Single-dotted lines indicate wiring not supplied with the unit.
*2.Dot-dash lines indicate the control box boundaries.
*3.Refer to the Data book for connecting input/output signal connectors.
*4.Daisy-chain terminals (TB3) on the outdoor units in the same refrigerant system together.
*5.Faston terminals have a locking function.
Make sure the terminals are securely locked in place after insertion. Press the tab on the terminals to removed them.
*6.Control box houses high-voltage parts.
Before inspecting the inside of the MAIN BOX or INV BOX, turn off the power,keep the unit off for at least 10 minutes, and confirm that the voltage of the connector RYPN on INV BOX has dropped to DC20V or less.
*7.Control board LED display.

LED2	Normal operation(Lit)/Error(Blink)	
LED3	SW6-10 is OFF and SW4 1~10 are OFF	In operation(Lit)/In stop(Unit)
	SW6-10 is ON	Function setting by SW4 enable(Lit)/disable(Unit)
LED101	Normal operation(Lit)/IC Error(Unit)	

*8.Difference of appliance.

Model name	Appliance
PUHY,TUHY	*9 exist
PURY,TURY	*9 do not exist

*9.Difference of appliance.

Model name	Appliance
PUHY,TUHY	LEV9
PURY,TURY	LEV2d

*10.Difference of appliance.

Model name	Appliance
PUHY,TUHY	LEV9
PURY,TURY	LEV9

*11.Difference of appliance.

Model name	Appliance
PURY-EP,TURY,PTURY	*11 not exist
PUHY-EP,TUHYE	*11 exist

*12.Difference of appliance.

Model name	Appliance
PUHY-EP,PURY-EP,TUHYE,TURYE	*12 exist
PUHY-EP,PURY-P,TUHYP,TURYP	*12 do not exist

<Symbol explanation>

Symbol	Explanation	
21S4a 21S4b	4-way valve	Cooling/Heating switching Heat exchanger capacity control(only PURY-P72YNU-A) Cooling/heating switching
63H1	Pressure switch	High pressure protection for the outdoor unit
63HS1	Pressure sensor	Discharge pressure
63LS		Low pressure
ACCT1,ACCT2	Current sensor(AC)	
C700,C701, C705,C706	Capacitor(inverter main circuit)	
DCL	DC reactor	
L	Choke coil	(for high frequency noise reduction)
LEV1 *10	Linear expansion valve	HPC control controls refrigerant flow in HPC circuit
LEV2a,b		Pressure control,Refrigerant flow rate control
LEV2d *9		Pressure control,Refrigerant flow rate control
LEV4 *12		For opening/closing the injection circuit
LEV9 *9,10		Heat exchanger for inverter
R1,5	Resistor	For inrush current prevention
RSH01/02/03		For current detection
SV1a	Solenoid valve	For opening/closing the bypass circuit under the O/S
SV2		For opening/closing the discharge suction bypass
SV9 *8		For opening/closing the bypass circuit
SV10 *8		For continuous heating
SV14,15 *11		For changing refrigerant flow (cooling/heating)
TB1	Terminal block	Power supply
TB2		Heater transmission line
TB3		Indoor/Outdoor transmission line
TB7		Central control transmission line
TH2 *8	Thermistor	Subcool heat exchanger outlet temperature
TH3		Pipe temperature
TH4		Discharge pipe temperature
TH5		ACC inlet pipe temperature
TH6 *8		Subcooled liquid refrigerant temperature
TH7		OA temperature
TH15		Compressor shell bottom temperature
THHS		IPM temperature
X901,X902	Magnetic relay(inverter main circuit)	
Z22,Z24,Z25	Function setting connector	

(2) PURY-(E)P96, (E)P120, (E)P144YNU-A

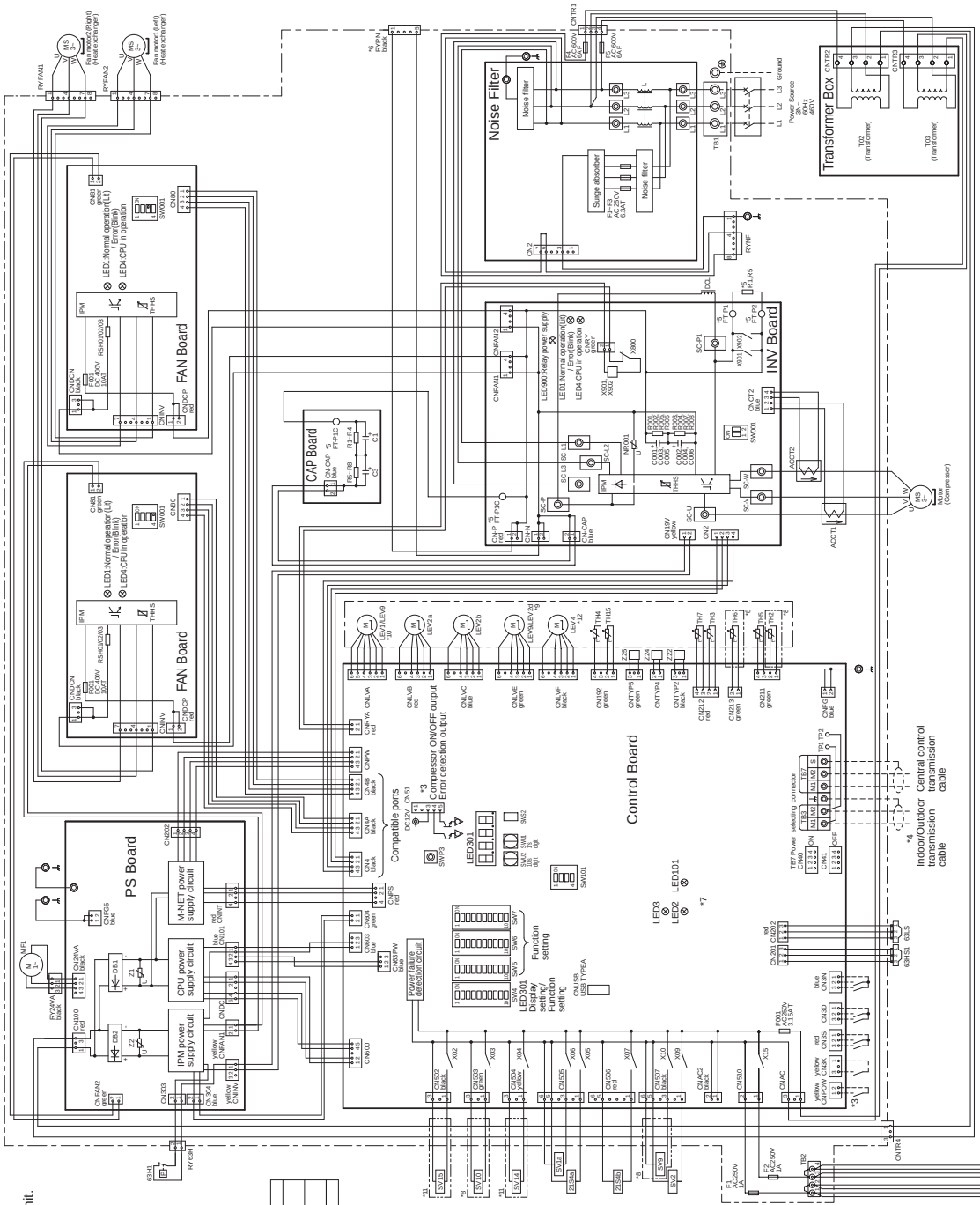

*1. Single-dotted lines indicate wiring not supplied with the unit.
*2. Dot-dash lines indicate the control box boundaries.
*3. Refer to the Data book for connecting input/output signal connectors.
*4. Daisy-chain terminals (TB3) on the outdoor units in the same refrigerant system together.
*5. Faston terminals have a locking function. Make sure the terminals are securely locked in place after insertion. Press the tab on the terminals to removed them.
*6. Control box houses high-voltage parts. Before inspecting the inside of the control box, turn off the power, keep the unit off for at least 10 minutes, and confirm that the voltage of the connector RYPN has dropped to DC20V or less.
*7. Control board LED display.

LED2	Normal operation(Lit)/Error(Blink)	
LED3	SW6-10 is OFF and SW4-1~10 are OFF	In operation(Lit)/In stop(Unit)
	SW6-10 is ON	Function setting by SW4 enable(Lit)/disable(Unit)
LED101	Normal operation(Lit)/IC Error(Unit)	

*8. Difference of appliance.

Model name	Appliance
PUHY,TUHY	*8 exist
PURY,TURY	*8 do not exist

*9. Difference of appliance.

Model name	Appliance
PUHY,TUHY	LEV9
PURY,TURY	LEV2d

*10. Difference of appliance.

Model name	Appliance
PUHY,TUHY	LEV1
PURY,TURY	LEV9

*11. Difference of appliance.

Model name	Appliance
PUHY-P,TUHYP,TURY	*11 do not exist
PURY-P,TURYP	*11 exist

*12. Difference of appliance.

Model name	Appliance
PUHY-P,PURY-P,TUHYE,TURYE	*12 exist
PURY-P,PURY-P,TURYP,TURYP	*12 do not exist

<Symbol explanation>

Symbol	Explanation
21S4a	4-way valve
21S4b	Cooling/Heating switching Heat exchanger capacity control(only PUHY model). Cooling/Heating switching
63H1	Pressure switch High pressure protection for the outdoor unit
63HS1	Pressure sensor Discharge pressure
63LS	Pressure sensor Low pressure
ACCT1,ACCT2	Current sensor(AC)
C1,C3, C001~C006	Capacitor (inverter main circuit)
DCL	DC reactor
L	Choke coil (for high frequency noise reduction)
LEV1 *10	HIC bypass,Controls refrigerant flow in HIC circuit
LEV2a,b	Linear expansion valve Pressure control,Refrigerant flow rate control
LEV2d *9	Pressure control,Refrigerant flow rate control
LEV4 *12	For opening/closing the injection circuit
LEV9 *9,10	Heat exchanger for inverter
MF1	Fan motor(for cooling in control box)
R1,5	Resistor For inrush current prevention
RSH01/02/03	For current detection
SV1a	Solenoid valve For opening/closing the bypass circuit under the O/S
SV2	For opening/closing the discharge suction bypass
SV9 *8	For opening/closing the bypass circuit
SV10 *8	For continuous heating
SV14,15 *11	For changing refrigerant flow (cooling/heating)
TB1	Terminal block Power supply
TB2	Heater transmission line
TB3	Indoor/Outdoor transmission line
TB7	Central control transmission line
TH2 *8	Thermistor Subcool bypass outlet temperature
TH3	Pipe temperature
TH4	Discharge pipe temperature
TH5	ACC inlet pipe temperature
TH6 *8	Subcooled liquid refrigerant temperature
TH7	OA temperature
TH15	Compressor shell bottom temperature
THHS	IPM temperature
X901,X902	Magnetic relay(Inverter main circuit)
Z22,24,25	Function setting connector

(3) PURY-P168YNU-A

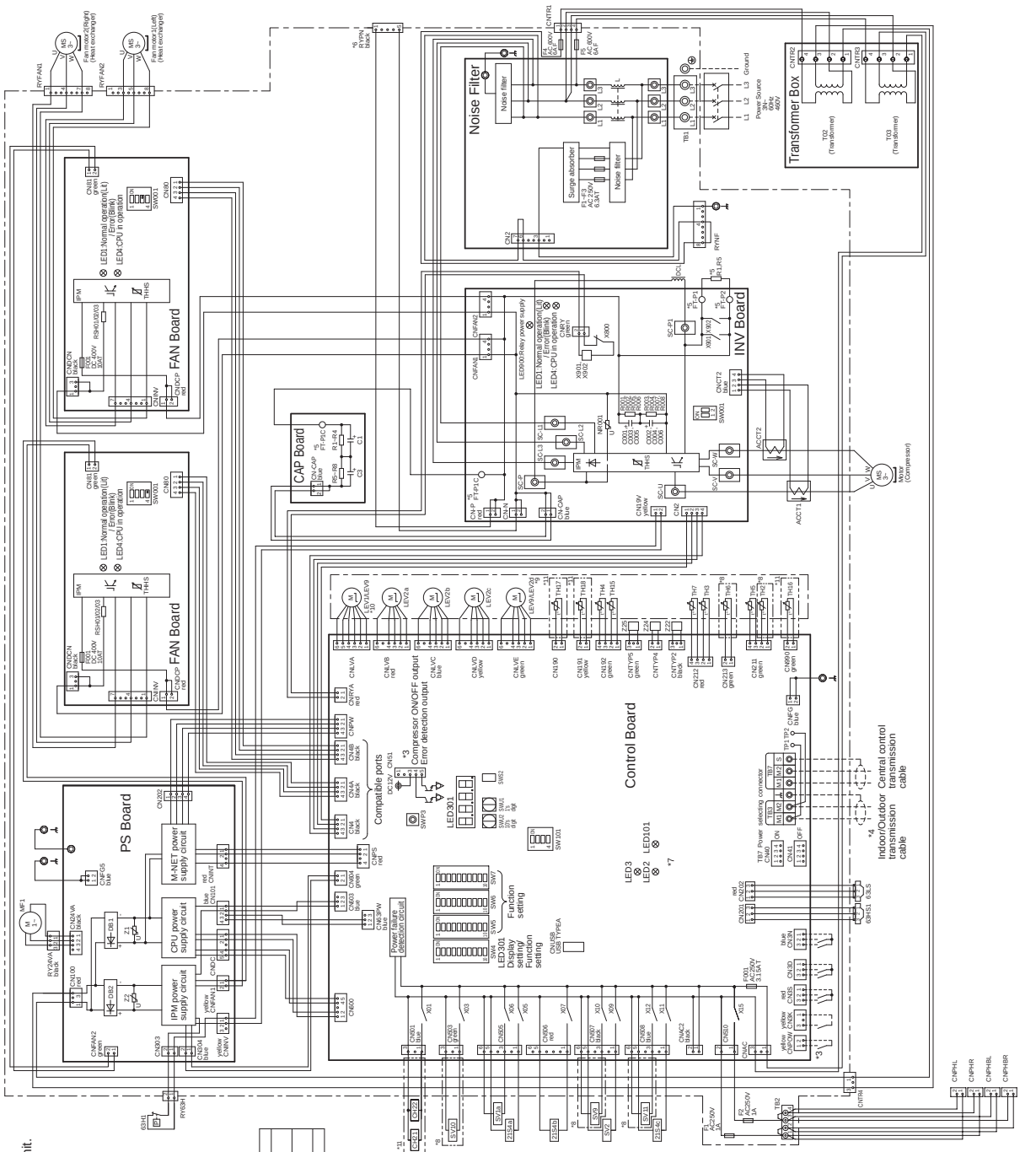

*1.Single-dotted lines indicate wiring not supplied with the unit.
*2.Dot-dash lines indicate the control box boundaries.
*3.Refer to the Data book for connecting input/output signal connectors.
*4.Daisy-chain terminals (TB3) on the outdoor units in the same refrigerant system together.
*5.Faston terminals have a locking function. Make sure the terminals are securely locked in place after insertion. Press the tab on the terminals to removed them.
*6.Control box houses high-voltage parts. Before inspecting the inside of the control box,turn off the power,keep the unit off for at least 10 minutes, and confirm that the voltage of the connector RYPN has dropped to DC20V or less.
*7.Control board LED display.

LED2	Normal operation(Lit)/Error(Blink)	
LED3	SW6-10 is OFF and SW4-1 is one OFF	In operation(Lit)/In stop(Unlit)
	SW6-10 is ON	Function setting by SW4 enable(Lit)/disable(Unlit)
LED101	Normal operation(Lit)/IC Error(Unlit)	

*8.Difference of appliance.

Model name	Appliance
PUHY,TUHY	*8 exist
PURY,TURY	*8 do not exist

*9.Difference of appliance.

Model name	Appliance
PUHY,TUHY	LEV9
PURY,TURY	LEV2d

*10.Difference of appliance.

Model name	Appliance
PUHY,TUHY	LEV1
PURY,TURY	LEV9

*11.Difference of appliance.

Model name	Appliance
PUHY,TUHY	*11 do not exist
PURY,TURY	*11 exist

<Symbol explanation>

Symbol		Explanation
21S4a 21S4b,c	4-way valve	Cooling/Heating switching Heat exchanger capacity control(only PUHY model) Cooling/Heating switching
63H1	Pressure switch	High pressure protection for the outdoor unit
63HS1	Pressure sensor	Discharge pressure
63LS		Low pressure
ACCT1,ACCT2	Current sensor(AC)	
C1,C3, C001~C006	Capacitor (inverter main circuit)	
CH21,22 *11	Belt heater(for heating the accumulator)	
DCL	DC reactor	
L	Choke coil (for high frequency noise reduction)	
LEV1 *10	Linear expansion valve	HIC bypass,Controls refrigerant flow in HIC circuit
LEV2a,b,c		Pressure control,Refrigerant flow rate control
LEV2d *9		Pressure control,Refrigerant flow rate control
LEV9 *9,10		Heat exchanger for inverter
MF1	Fan motor(for cooling in control box)	
R1,5	Resistor	For inrush current prevention
RSH01/02/03		For current detection
SV1a	Solenoid valve	For opening/closing the bypass circuit under the O/S
SV2		For opening/closing the discharge suction bypass
SV9 *8		For opening/closing the bypass circuit
SV10,11 *8		For continuous heating
TB1	Terminal block	Power supply
TB2		Heater transmission line
TB3		Indoor/Outdoor transmission line
TB7		Central control transmission line
TH2 *8	Thermistor	Subcool bypass outlet temperature
TH3		Pipe temperature
TH4		Discharge pipe temperature
TH5		ACC inlet pipe temperature
TH6 *8		Subcooled liquid refrigerant temperature
TH7		OA temperature
TH15		Compressor shell bottom temperature
TH16 *11		Accumulator temperature (Bottom)
TH17 *11		Accumulator temperature (Middle)
TH18 *11		Accumulator temperature (Hi)
THHS		IPM temperature
X901,X902	Magnetic relay(inverter main circuit)	
Z2,Z4,Z5	Function setting connector	

(4) PURY-EP168YNU-A

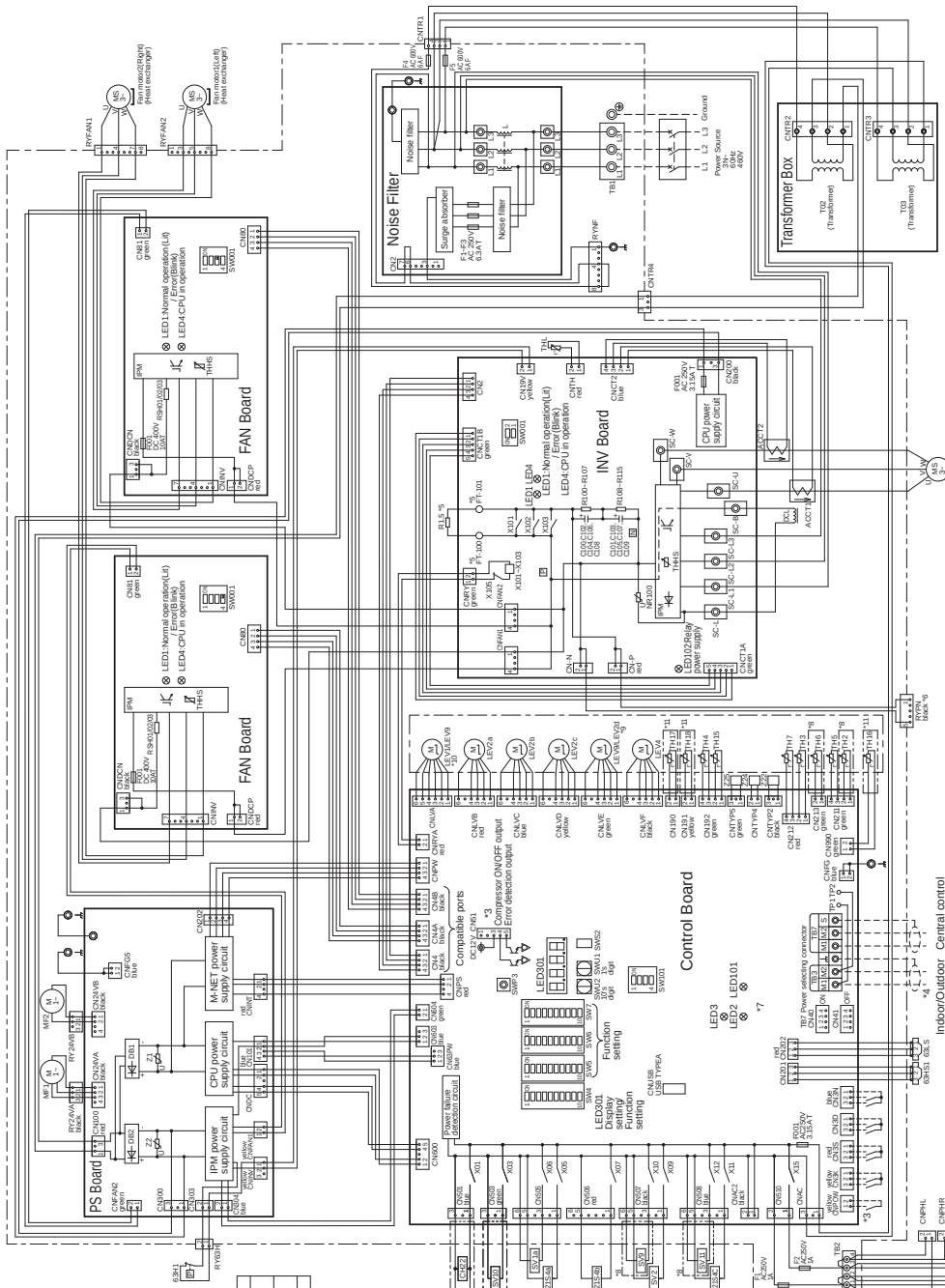

*1.Single-dotted lines indicate wiring not supplied with the unit.
*2.Dot-dash lines indicate the control box boundaries.
*3.Refer to the Data book for connecting input/output signal connectors.
*4.Daisy-chain terminals (TB3) on the outdoor units in the same refrigerant system together.
*5.Faston terminals have a locking function.
Make sure the terminals are securely locked in place after insertion. Press the tab on the terminals to removed them.
*6.Control box houses high-voltage parts.
Before inspecting the inside of the control box,turn off the power,keep the unit off for at least 10 minutes, and confirm that the voltage of the connector RYPN has dropped to DC20V or less.
*7.Control board LED display.

LED2	Normal operation(Lit)/Error(Blink)	
LED3	SW6-10 is OFF and SW6-1 is OFF	In operation(Lit)/In stop(Unlit)
	SW6-10 is ON	Function setting by SW4 enable(Lit)/disable(Unlit)
LED101	Normal operation(Lit)/IC Error(Unlit)	

*8.Difference of appliance.

Model name	Appliance
PURY,TURY	*9 do not exist
PUHY,TUHY	*9 exist

*9.Difference of appliance.

Model name	Appliance
PUHY,TUHY	LEV9
PURY,TURY	LEV2d

*10.Difference of appliance.

Model name	Appliance
PUHY,TUHY	LEV1
PURY,TURY	LEV9

*11.Difference of appliance.

Model name	Appliance
PUHY,TUHY	*11 do not exist
PURY,TURY	*11 exist

<Symbol explanation>

Symbol	Explanation	
21S4a	4-way valve	Cooling/Heating switching
21S4b,c		Heat exchanger capacity control(only PUHY model)
		Cooling/heating switching
63H1	Pressure switch	High pressure protection for the outdoor unit
63HS1	Pressure sensor	Discharge pressure
63LS	Pressure sensor	Low pressure
ACCT1,ACCT2	Current sensor(AC)	
C100~C109	Capacitor (inverter main circuit)	
CH21,22 *11	Belt heater(for heating the accumulator)	
DCL	DC reactor	
L	Choke coil (for high frequency noise reduction)	
LEV1 *10	Linear expansion valve	HIC bypass,Controls refrigerant flow in HIC circuit
LEV2a,b,c		Pressure control,Refrigerant flow rate control
LEV2d *9		Pressure control,Refrigerant flow rate control
LEV4		For opening/closing the injection circuit
LEV9 *9,10		Heat exchanger for inverter
MF1,2	Fan motor(for cooling in control box)	
R1,5	Resistor	For inrush current prevention
RSH01/02/03		For current detection
SV1a	Solenoid valve	For opening/closing the bypass circuit under the O/S
SV2		For opening/closing the discharge suction bypass
SV9 *8		For opening/closing the bypass circuit
SV10,11 *8		For continuous heating
TB1	Terminal block	Power supply
TB2		Heater transmission line
TB3		Indoor/Outdoor transmission line
TB7		Central control transmission line
TH2 *8	Thermistor	Subcool bypass outlet temperature
TH3		Pipe temperature
TH4		Discharge pipe temperature
TH5		ACC inlet pipe temperature
TH6 *8		Subcooled liquid refrigerant temperature
TH7		OA temperature
TH15		Compressor shell bottom temperature
TH16 *11		Accumulator temperature (bottom)
TH17 *11		Accumulator temperature (Middle)
TH18 *11		Accumulator temperature (Hi)
THHS		IPM temperature
X101~X103	Magnetic relay(inverter main circuit)	
Z22,24,25	Function setting connector	

(5) PURY-EP192, EP216, EP240YNU-A

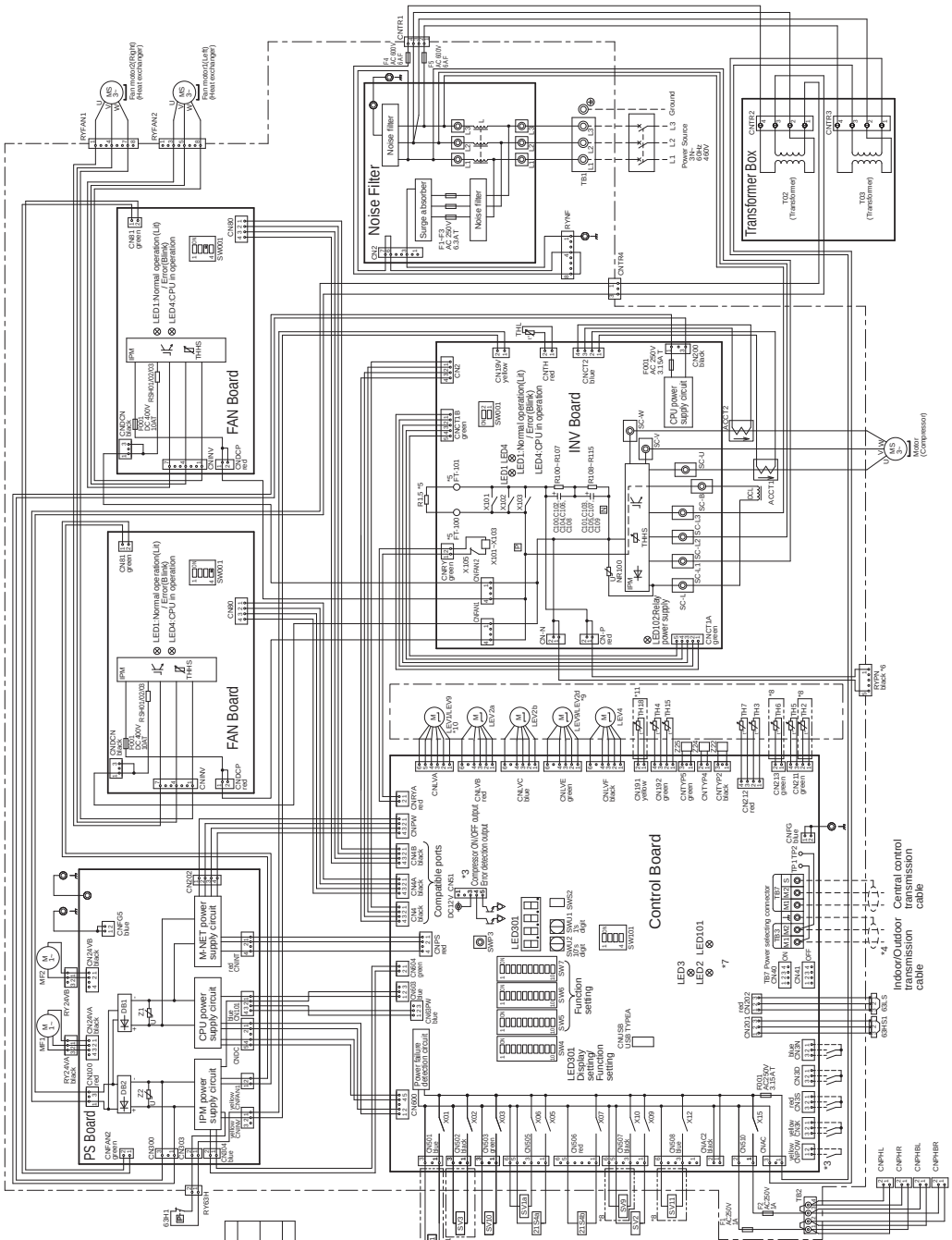

*1.Single-dotted lines indicate wiring not supplied with the unit.
*2.Dot-dash lines indicate the control box boundaries.
*3.Refer to the Data book for connecting input/output signal connectors.
*4.Daisy-chain terminals (TB3) on the outdoor units in the same refrigerant system together.
*5.Faston terminals have a locking function.
Make sure the terminals are securely locked in place after insertion. Press the tab on the terminals to removed them.
*6.Control box houses high-voltage parts.
Before inspecting the inside of the control box,turn off the power,keep the unit off for at least 10 minutes, and confirm that the voltage of the connector RYPN has dropped to DC20V or less.
*7.Control board LED display.

LED2	Normal operation(Lit)/Error(Blink)	
LED3	SW6-10 is OFF and SW6-1 is OFF	In operation(Lit)/In stop(Unit)
	SW6-10 is ON	Function setting by SW4 enable(Lit)/disable(Unit)
LED101	Normal operation(Lit)/IC Error(Unit)	

*8.Difference of appliance.

Model name	Appliance
PURY,TURY	*9 do not exist
PUHY,TUHY	*9 exist

*9.Difference of appliance.

Model name	Appliance
PUHY,TUHY	LEV9
PURY,TURY	LEV2d

*10.Difference of appliance.

Model name	Appliance
PUHY,TUHY	LEV1
PURY,TURY	LEV9

*11.Difference of appliance.

Model name	Appliance
PUHY,TUHY	*11 do not exist
PURY,TURY	*11 exist

<Symbol explanation>

Symbol	Explanation	
21S4a	4-way valve	Cooling/Heating switching
21S4b		Heat exchanger capacity control(only PURY model)
		Cooling/heating switching
63H1	Pressure switch	High pressure protection for the outdoor unit
63HS1	Pressure sensor	Discharge pressure
63LS		Low pressure
ACCT1,ACCT2	Current sensor(AC)	
C100~C109	Capacitor (inverter main circuit)	
CH21 *11	Belt heater(for heating the accumulator)	
DCL	DC reactor	
L	Choke coil (for high frequency noise reduction)	
LEV1 *10	Linear electronic expansion valve	HIC bypass,Controls refrigerant flow in HIC circuit
LEV2a,b		Pressure control,Refrigerant flow rate control
LEV2d *9		Pressure control,Refrigerant flow rate control
LEV4		For opening/closing the injection circuit
LEV9 *9,10		Heat exchanger control for inverter
MF1,2	Fan motor(for cooling the inverter)	
RL5	Resistor	For inrush current protection
RSH01/02/03		For current detection
SV1a	Solenoid valve	For opening/closing the bypass circuit during the O.S.
SV2		For opening/closing the discharge suction bypass
SV3 *11, SV9 *8		For opening/closing the bypass circuit
SV10, SV11 *8		For continuous heating
TB1	Terminal block	Power supply
TB2		Heater transmission line
TB3		Indoor/Outdoor transmission line
TB7		Central control transmission line
TH2 *8	Thermistor	Subcool bypass outlet temperature
TH3		Pipe temperature
TH4		Discharge pipe temperature
TH5		ACC inlet pipe temperature
TH6 *8		Subcooled liquid refrigerant temperature
TH7		OA temperature
TH15		Compressor shell bottom temperature
TH18 *11		Accumulator temperature (Hi)
THHS		IPM temperature
X101~X103	Magnetic relay(inverter main circuit)	
Z22,24,25	Function setting connector	

(6) PURY-(E)P72TNU-A

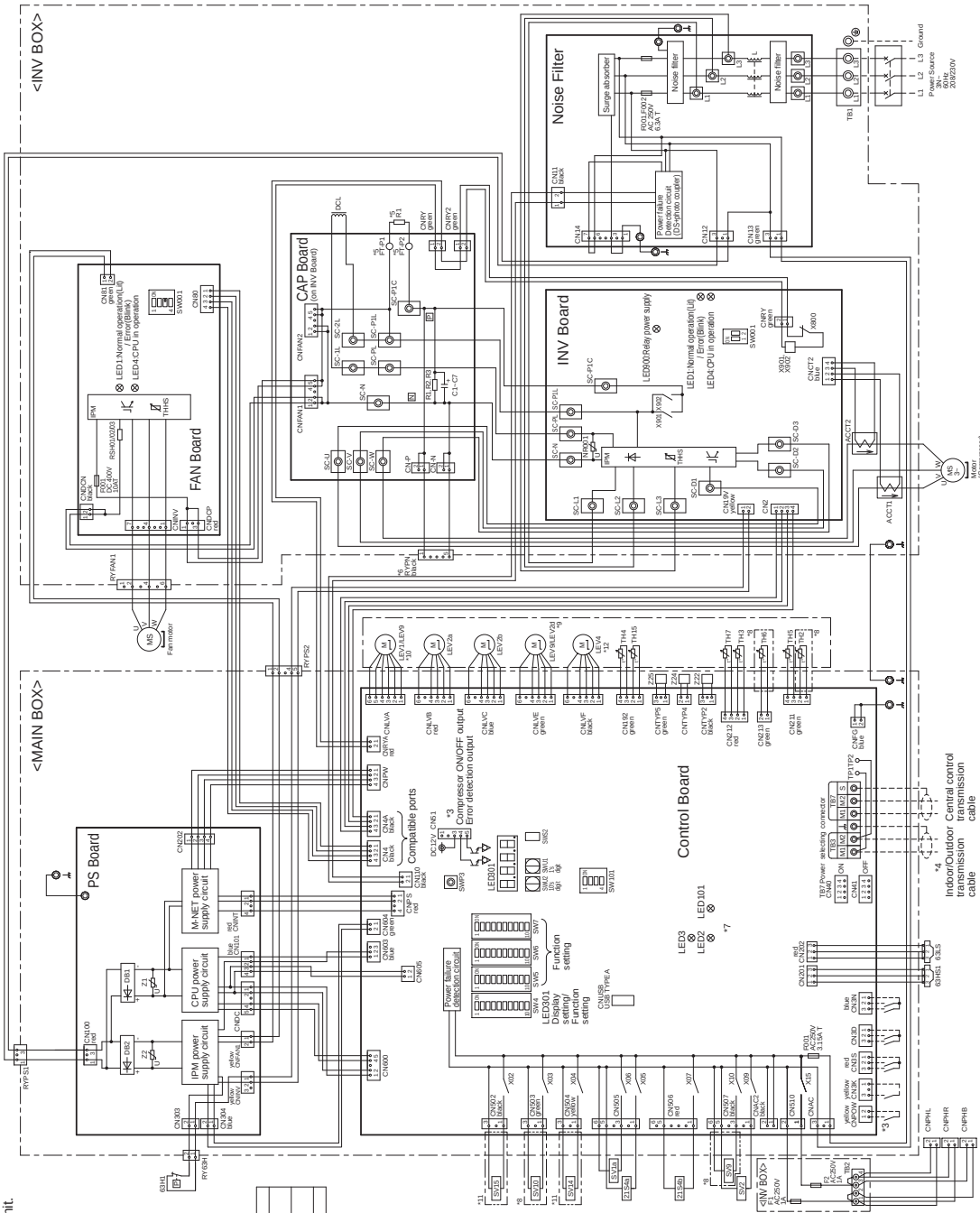

*1.Single-dotted lines indicate wiring not supplied with the unit.
*2.Dot-dash lines indicate the control box boundaries.
*3.Refer to the Data book for connecting input/output signal connectors.
*4.Daisy-chain terminals (TB3) on the outdoor units in the same refrigerant system together.
*5.Faston terminals have a locking function. Make sure the terminals are securely locked in place after insertion. Press the tab on the terminals to removed them.
*6.Control box houses high-voltage parts. Before inspecting the inside of the control box,turn off the power,keep the unit off for at least 10 minutes, and confirm that the voltage of the connector RYPN has dropped to DC20V or less.
*7.Control board LED display.

LED2	Normal operation(Lit)/Error(Blink)	
LED3	SW6-10 is OFF and SW14-5,10 are OFF	In operation(Lit)/In stop(Unit)
	SW6-10 is ON	Function setting by SW4 enable(Lit)/disable(Unit)
LED101	Normal operation(Lit)/IC Error(Unit)	

*8.Difference of appliance.

Model name	Appliance
PUHY,TUHY	*8 exist
PURY,TURY	*8 do not exist

*9.Difference of appliance.

Model name	Appliance
PUHY,TUHY	LEV9
PURY,TURY	LEV2d

*10.Difference of appliance.

Model name	Appliance
PUHY-P,PURY,TUHYP,TURYP	*11 do not exist
PUHY-EP,TUHYE	*11 exist

*11.Difference of appliance.

Model name	Appliance
PUHY-P,PURY,TUHYP,TURYP	*12 exist
PUHY-EP,PURY-EP,TUHYE,TURYE	*12 do not exist

*12.Difference of appliance.

Model name	Appliance
PUHY-EP,PURY-EP,TUHYE,TURYE	*12 exist
PUHY-P,PURY-P,TUHYP,TURYP	*12 do not exist

<Symbol explanation>

Symbol	Explanation	
21S4a	4-way valve	Cooling/Heating switching
21S4b		Heat exchanger capacity control(only PUHY model)
		Cooling/Heating switching
63H1	Pressure switch	High pressure protection for the outdoor unit
63HS1	Pressure sensor	Discharge pressure
63LS		Low pressure
ACCT1,ACCT2	Current sensor(AC)	
C1~C7	Capacitor (inverter main circuit)	
DCL	DC reactor	
L	Choke coil (for high frequency noise reduction)	
LEV1 *10	Linear expansion valve	HIC bypass,Controls refrigerant flow in HIC circuit
LEV2a,b		Pressure control,Refrigerant flow rate control
LEV2d *9		Pressure control,Refrigerant flow rate control
LEV4 *12		For opening/closing the injection circuit
LEV9 *9,10		Heat exchanger for inverter
R1	Resistor	For inrush current prevention
RSH01/02/03		For current detection
SV1a	Solenoid valve	For opening/closing the bypass circuit under the O/S
SV2		For opening/closing the discharge suction bypass
SV9 *8		For opening/closing the bypass circuit
SV10 *8		For continuous heating
SV14,15 *11		For changing refrigerant flow (cooling/heating)
TB1	Terminal block	Power supply
TB2		Heater transmission line
TB3		Indoor/Outdoor transmission line
TB7		Central control transmission line
TH2 *8	Thermistor	Subcool bypass outlet temperature
TH3		Pipe temperature
TH4		Discharge pipe temperature
TH5		ACC inlet pipe temperature
TH6 *8		Subcooled liquid refrigerant temperature
TH7		OA temperature
TH15		Compressor shell bottom temperature
THHS		IPM temperature
X901,X902	Magnetic relay(inverter main circuit)	
Z22,24,25	Function setting connector	

(7) PURY-(E)P96, (E)P120, (E)P144TNU-A

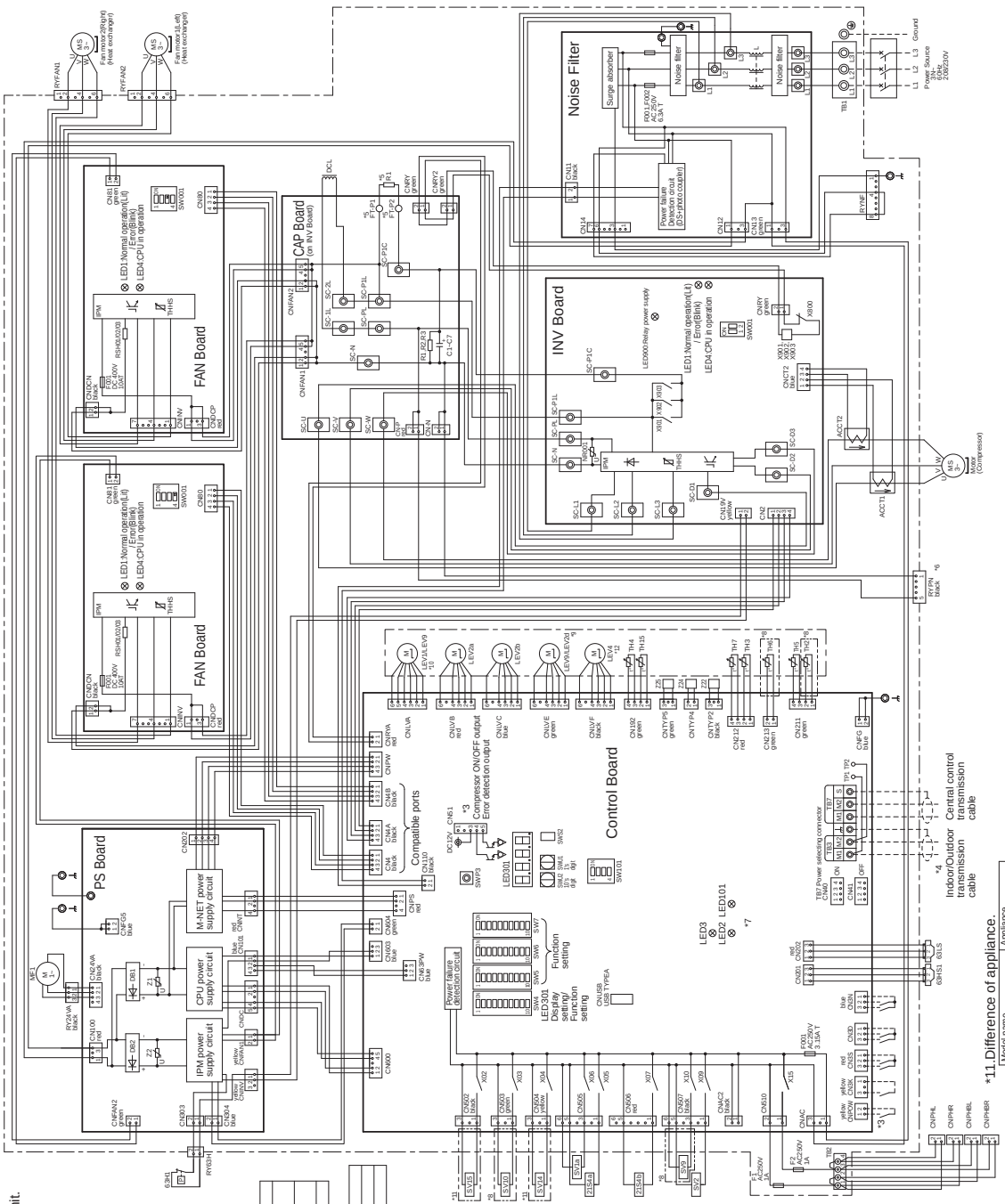

*1.Single-dotted lines indicate wiring not supplied with the unit.
*2.Dot-dash lines indicate the control box boundaries.
*3.Refer to the Data book for connecting input/output signal connectors.
*4.Daisy-chain terminals (TB3) on the outdoor units in the same refrigerant system together.
*5.Faston terminals have a locking function. Make sure the terminals are securely locked in place after insertion. Press the tab on the terminals to removed them.
*6.Control box houses high-voltage parts. Before inspecting the inside of the control box,turn off the power,keep the unit off for at least 10 minutes, and confirm that the voltage of the connector RYPN has dropped to DC20V or less.
*7.Control board LED display.

LED2	Normal operation(Lit)/Error(Blink)	
LED3	In operation(Lit)/In stop(Unit)	
	SW6-1 to OFF and SW6-10 to OFF	Function setting by SW4 enable(Lit)/disable(Unit)
	SW6-10 to ON	
LED101	Normal operation(Lit)/IC Error(Unlit)	

*8.Difference of appliance.

Model name	Appliance
PURY,TURY	LEV1
PURY,TURY	LEV9

*9.Difference of appliance.

Model name	Appliance
PUHY,TUHY	LEV9
PURY,TURY	LEV2d

*10.Difference of appliance.

Model name	Appliance
PURY,TURY	*8 exist
PURY,TURY	*8 do not exist

*11.Difference of appliance.

Model name	Appliance
PUHY-P,PURY,TUHYP,TURY	*11 do not exist
PUHY-EP,TUHYE	*11 exist

*12.Difference of appliance.

Model name	Appliance
PUHY-EP,PURY-EP,TUHYE,TURYE	*12 exist
PUHY-P,PURY-P,TUHYP,TURYP	*12 do not exist

<Symbol explanation>

Symbol	Explanation	
21S4a	4-way valve	Cooling/Heating switching
21S4b		Heat exchanger capacity control(only PUHY model)
63H1	Pressure switch	Cooling/Heating switching High pressure protection for the outdoor unit
63HS1	Pressure sensor	Discharge pressure
63LS	Pressure switch	Low pressure
ACCT1,ACCT2	Current sensor(AC)	
C1-C7	Capacitor (inverter main circuit)	
DCL	DC reactor	
L	Choke coil (for high frequency noise reduction)	
LEV1 *10	Linear expansion valve	HIC bypass,Controls refrigerant flow in HIC circuit
LEV2a,b		Pressure control,Refrigerant flow rate control
LEV2d *9		Pressure control,Refrigerant flow rate control
LEV4 *12		For opening/closing the injection circuit
LEV9 *9 ,10		Heat exchanger for inverter
MF1	Fan motor(for cooling in control box)	
R1	Resistor	For inrush current prevention
RSH0102/03		For current detection
SV1a	Solenoid valve	For opening/closing the bypass circuit under the OFS
SV2		For opening/closing the discharge suction bypass
SV9 *8		For opening/closing the bypass circuit
SV10 *8		For continuous heating
SV14 *11		For changing refrigerant flow (cooling/heating)
SV15 *11		For changing refrigerant flow (cooling/heating)
TB1	Terminal block	Power supply
TB2		Heater transmission line
TB3		Indoor/Outdoor transmission line
TB7		Central control transmission line
TH2 *8	Thermistor	Subcool bypass outlet temperature
TH3		Pipe temperature
TH4		Discharge pipe temperature
TH5		ACC inlet pipe temperature
TH6 *8		Subcooled liquid refrigerant temperature
TH7		OA temperature
THI15		Compressor shell bottom temperature
THHS		IPM temperature
X901~X903	Magnetic relay(inverter main circuit)	
Z2,Z4,Z5	Function setting connector	

(8) PURY-P168TNU-A

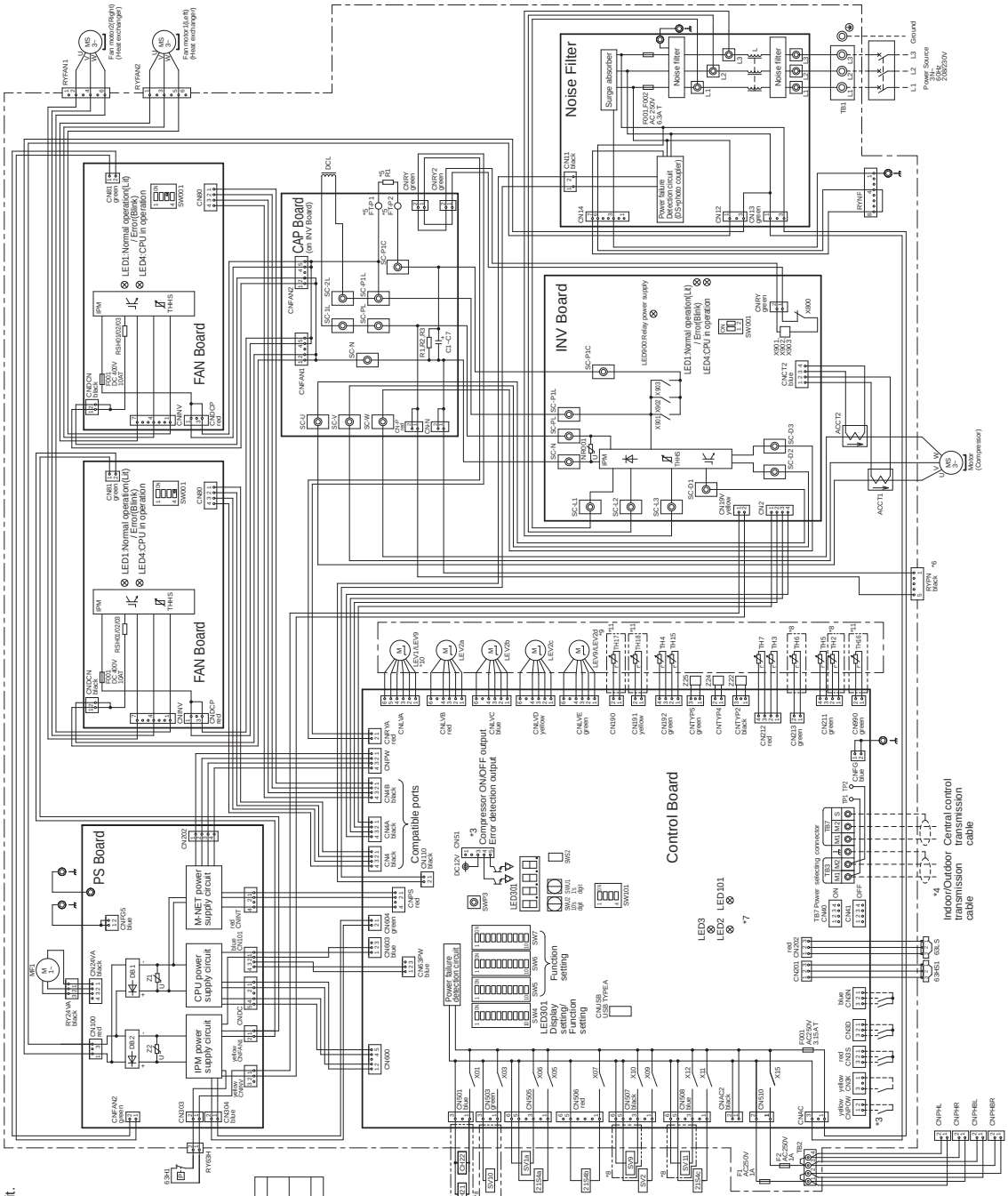

*1. Single-dotted lines indicate wiring not supplied with the unit.
*2. Dot-dash lines indicate the control box boundaries.
*3. Refer to the Data book for connecting input/output signal connectors.
*4. Daisy-chain terminals (TB3) on the outdoor units in the same refrigerant system together.
*5. Faston terminals have a locking function. Make sure the terminals are securely locked in place after insertion. Press the tab on the terminals to removed them.
*6. Control box houses high-voltage parts. Before inspecting the inside of the control box,turn off the power,keep the unit off for at least 10 minutes, and confirm that the voltage of the connector RYPN has dropped to DC20V or less.
*7. Control board LED display.

LED2	Normal operation(Lit)/Error(Blink)	
LED3	SW6-10 is OFF and SW4-1~10 are OFF	In operation(Lit)/In stop(Unit)
	SW6-10 is ON	Function setting by SW4 enable(Lit)/disable(Unit)
LED101	Normal operation(Lit)/IC Error(Unit)	

*8. Difference of appliance.

Model name	Appliance
PUHY,TUHY	*9 exist
PURY,TURY	*9 do not exist

*10. Difference of appliance.

Model name	Appliance
PUHY,TUHY	LEV1
PURY,TURY	LEV9

*11. Difference of appliance.

Model name	Appliance
PUHY,TUHY	*11 do not exist
PURY,TURY	*11 exist

<Symbol explanation>

Symbol	Explanation	
21S4a	4-way valve	Cooling/Heating switching
21S4b,c		Heat exchanger capacity control(only PUHY model)
63H1	Pressure switch	Cooling/Heating switching High pressure protection for the outdoor unit
63HS1	Pressure sensor	Discharge pressure
63LS1	Pressure sensor	Low pressure
ACCT1,ACCT2	Current sensor(AC)	
C1~C7	Capacitor (inverter main circuit)	
CH21,22 *11	Belt heater(for heating the accumulator)	
DCL	DC reactor	
L	Choke coil (for high frequency noise reduction)	
LEV1 *10	Linear expansion valve	HIC bypass,Controls refrigerant flow in HIC circuit
LEV2a,b,c		Pressure control,Refrigerant flow rate control
LEV2d *9		Pressure control,Refrigerant flow rate control
LEV9 *9,10		Heat exchanger for inverter
MF1	Fan motor(for cooling in control box)	
R1	Resistor	For inrush current prevention
R3H01/02/03		For current detection
SV1a	Solenoid valve	For opening/closing the bypass circuit under the O/S
SV2		For opening/closing the discharge switch bypass
SV9 *8		For opening/closing the bypass circuit
SV10 *8		For continuous heating
SV11 *8		For continuous heating
TB1	Terminal block	Power supply
TB2		Heater transmission line
TB3		Indoor/Outdoor transmission line
TB7		Central control transmission line
TH2 *8	Thermistor	Subcool bypass outlet temperature
TH3		Pipe temperature
TH4		Discharge pipe temperature
TH5		ACC inlet pipe temperature
TH6 *8		Subcooled liquid refrigerant temperature
TH7		OA temperature
TH15		Compressor shell bottom temperature
TH16 *11		Accumulator temperature (Bottom)
TH17 *11		Accumulator temperature (Middle)
TH18 *11		Accumulator temperature (Hi)
THHS		IPM temperature
X901~X903	Magnetic relay(Inverter main circuit)	
Z22,24,25	Function setting connector	

(9) PURY-EP168TNU-A

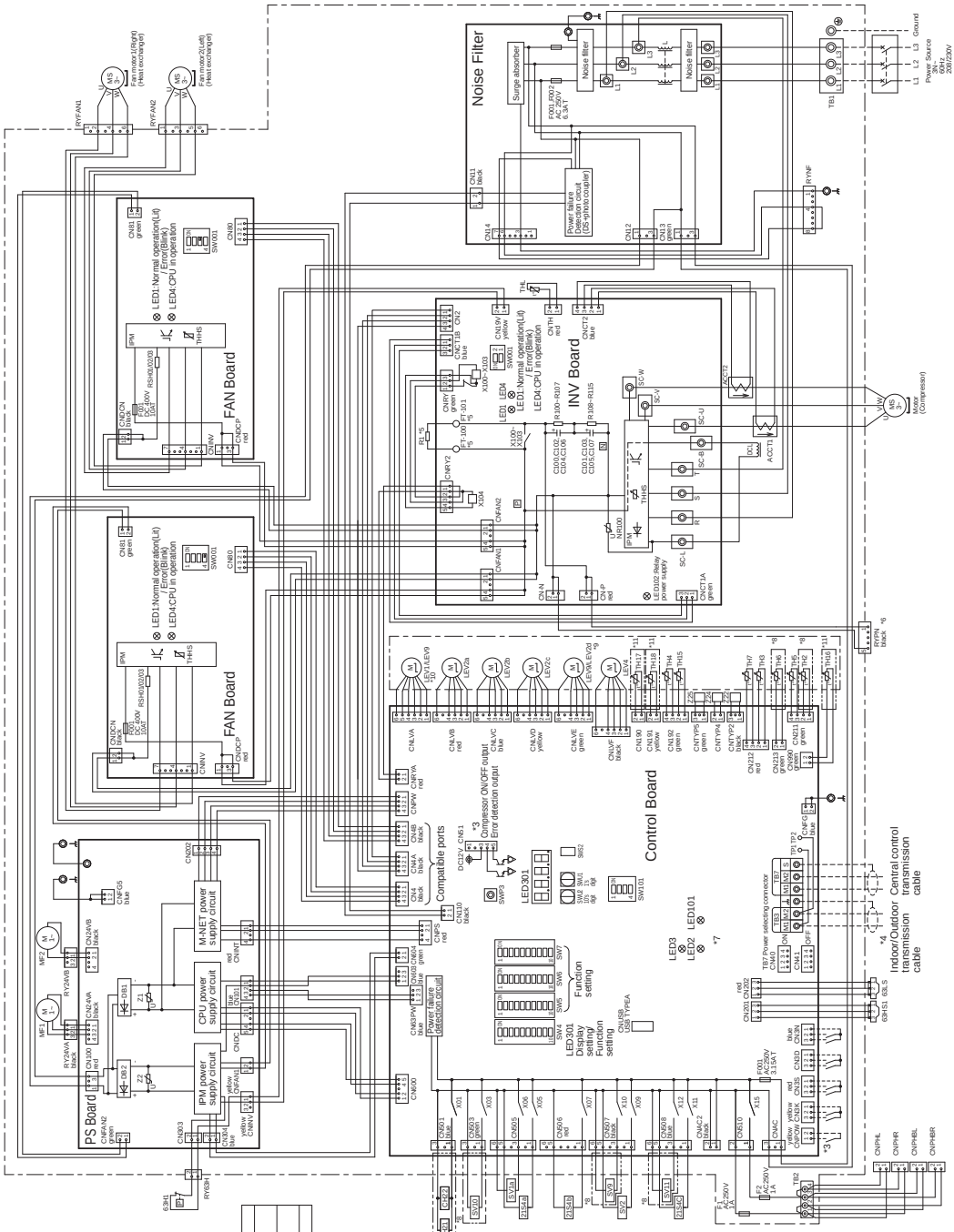

*1. Single-dotted lines indicate wiring not supplied with the unit.
*2. Dot-dash lines indicate the control box boundaries.
*3. Refer to the Data book for connecting input/output signal connectors.
*4. Daisy-chain terminals (TB3) on the outdoor units in the same refrigerant system together.
*5. Faston terminals have a locking function. Make sure the terminals are securely locked in place after insertion. Press the tab on the terminals to removed them.
*6. Control box houses high-voltage parts. Before inspecting the inside of the control box,turn off the power,keep the unit off for at least 10 minutes, and confirm that the voltage of the connector RYPN has dropped to DC20V or less.
*7. Control board LED display.

LED2	Normal operation(Lit)/Error(Blink)
LED3	SW6-10 is OFF and In operation(Lit.)/In stop(Unlit)
	SW4-1~10 are OFF Function setting by SW4
	SW6-10 is ON enabled(Lit)/disabled(Unlit)
LED101	Normal operation(Lit)/IC Error(Unlit)

*8. Difference of appliance.

Model name	Appliance
PURY.TUHY	*8 ex/d
PURY.TURY	*8 do not exist

*9. Difference of appliance.

Model name	Appliance
PURY.TUHY	LEV9
PURY.TURY	LEV2d

*10. Difference of appliance.

Model name	Appliance
PURY.TUHY	LEV1
PURY.TURY	LEV9

*11. Difference of appliance.

Model name	Appliance
PURY.TUHY	*11 do not exist
PURY.TURY	*11 exist

<Symbol explanation>

Symbol	Explanation
21S4a	4-way valve
21S4b,c	Cooling/Heating switching Heat exchanger capacity control(only HIC circuit) Cooling/heating switching
63H1	Pressure switch High pressure protection for the outdoor unit
63HS1	Pressure sensor Discharge pressure
63LS	Pressure sensor Low pressure
ACCT1,ACCT2	Current sensor(AC)
C100~C107	Capacitor (inverter main circuit)
CH21,22 *11	Belt heater(for heating the accumulator)
DCL	DC reactor
L	Choke coil (for high frequency noise reduction)
LEV1 *10	HIC bypass Controls refrigerant flow in HIC circuit
LEV2a,b,c	Linear expansion valve Pressure control,Refrigerant flow rate control
LEV2d *9	Pressure control,Refrigerant flow rate control For opening/closing the injection circuit
LEV4	Heat exchanger for inverter
LEV9 *9,10	Fan motor(for cooling in control box)
MF1,2	Fan motor
R1	Resistor For inrush current prevention
RSH01/02/03	For current detection
SV1a	Solenoid valve For opening/closing the bypass circuit under the O/S
SV2	For opening/closing the discharge suction bypass For opening/closing the bypass circuit
SV9 *8	For continuous heating
SV10 *8	For continuous heating
SV11 *8	Power supply
TB1	Terminal block Heater transmission line
TB2	Indoor/Outdoor transmission line
TB3	Central control transmission line
TB7	Subcool bypass outlet temperature
TH2 *8	Thermistor Pipe temperature
TH3	Discharge pipe temperature
TH4	ACC inlet pipe temperature
TH5	Subcooled liquid refrigerant temperature
TH6 *8	OA temperature
TH7	Compressor shell bottom temperature
TH15	Accumulator temperature (Bottom)
TH16 *11	Accumulator temperature (Middle)
TH17 *11	Accumulator temperature (Hi)
TH18 *11	IPM temperature
THHS	Magnetic relay(Inverter main circuit)
X101~X103	Function setting connector
Z22,24,25	

(10) PURY-EP192, EP216, EP240TNU-A

*1.Single-dotted lines indicate wiring not supplied with the unit.
*2.Dot-dash lines indicate the control box boundaries.
*3.Refer to the Data book for connecting input/output signal connectors.
*4.Daisy-chain terminals (TB3) on the outdoor units in the same refrigerant system together.
*5.Faston terminals have a locking function.
Make sure the terminals are securely locked in place after insertion. Press the tab on the terminals to removed them.
*6.Control box houses high-voltage parts.
Before inspecting the inside of the control box,turn off the power,keep the unit off for at least 10 minutes, and confirm that the voltage of the connector RYPN has dropped to DC20V or less.
*7.Control board LED display.

LED2	Normal operation(Lit)/Error(Blink)	
LED3	SW6-10 is OFF and SW4-1~10 are OFF	In operation(Lit)/In stop(Unlit)
	SW6-10 is ON	Function setting by SW4 enable(Lit)/disable(Unlit)
LED101	Normal operation(Lit)/IC Error(Unlit)	

*8.Difference of appliance.

Model name	Appliance
PUHY,TUHY	*8 exist
PURY,TURY	*8 do not exist

*9.Difference of appliance.

Model name	Appliance
PUHY,TUHY	LEV9
PURY,TURY	LEV2d

*10.Difference of appliance.

Model name	Appliance
PUHY,TUHY	LEV1
PURY,TURY	LEV9

*11.Difference of appliance.

Model name	Appliance
PUHY,TUHY	*11 do not exist
PURY,TURY	*11 exist

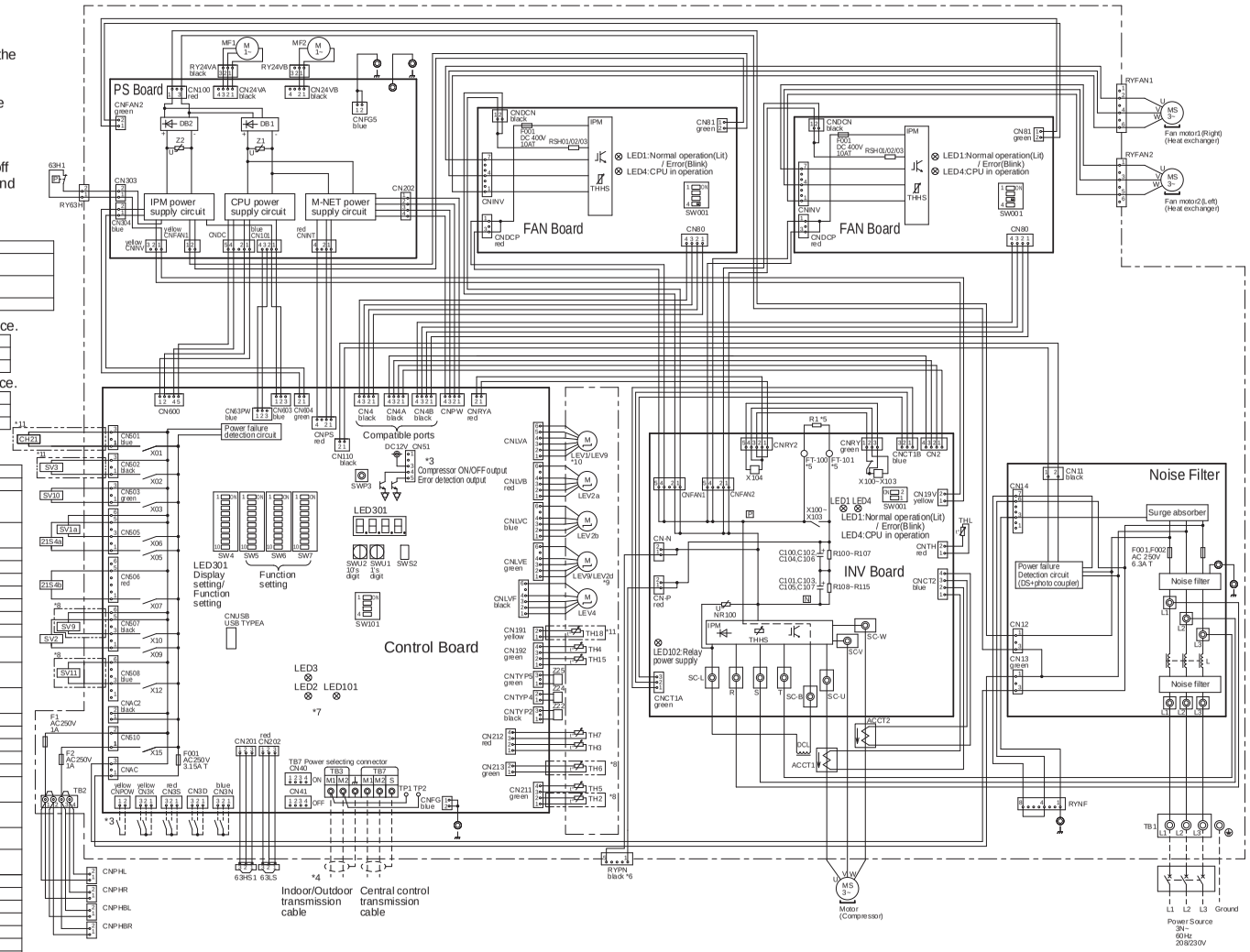

<Symbol explanation>

Symbol	Explanation	
21S4a	4-way valve	Cooling/Heating switching
21S4b		Heat exchanger capacity control(only PUHY model). Cooling/heating switching
63H1	Pressure switch	High pressure protection for the outdoor unit
63HS1	Pressure sensor	Discharge pressure
63LS		Low pressure
ACCT1,ACCT2	Current sensor(AC)	
C100~C107	Capacitor (inverter main circuit)	
CH21 *11	Belt heater(for heating the accumulator)	
DCL	DC reactor	
L	Choke coil (for high frequency noise reduction)	
LEV1 *10	Linear expansion valve	HIC bypass,Controls refrigerant flow in HIC circuit
LEV2a,b		Pressure control,Refrigerant flow rate control
LEV2d *9		Pressure control,Refrigerant flow rate control
LEV4		For opening/closing the injection circuit
LEV9 *9,10		Heat exchanger for inverter
MF1,2	Fan motor(for cooling in control box)	
R1	Resistor	For inrush current prevention
RSH01/02/03		For current detection
SV1a	Solenoid valve	For opening/closing the bypass circuit under the O/S
SV2		For opening/closing the discharge suction bypass
SV3 *11 SV9 *8		For opening/closing the bypass circuit
SV10 SV11 *8		For continuous heating
TB1	Terminal block	Power supply
TB2		Heater transmission line
TB3		Indoor/Outdoor transmission line
TB7		Central control transmission line
TH2 *8	Thermistor	Subcool bypass outlet temperature
TH3		Pipe temperature
TH4		Discharge pipe temperature
TH5		ACC inlet pipe temperature
TH6 *8		Subcooled liquid refrigerant temperature
TH7		OA temperature
TH15		Compressor shell bottom temperature
TH18 *11		Accumulator temperature (Hi)
THHS		IPM temperature
X101~X103	Magnetic relay(inverter main circuit)	
Z22,24,25	Function setting connector	

(11) PURY-(E)P72YNU-A1

*1.Single-dotted lines indicate wiring not supplied with the unit.
*2.Dot-dash lines indicate the control box boundaries.
*3.Refer to the Data book for connecting input/output signal connectors.
*4.Daisy-chain terminals (TB3) on the outdoor units in the same refrigerant system together.
*5.Faston terminals have a locking function. Make sure the terminals are securely locked in place after insertion. Press the tab on the terminals to removed them.
*6.Control box houses high-voltage parts. Before inspecting the inside of the MAIN BOX or INV BOX, turn off the power,keep the unit off for at least 10 minutes, and confirm that the voltage of the connector RYPN on INV BOX has dropped to DC20V or less.
*7.Control board LED display.

LED2	Normal operation(Lit)/Error(Blink)	
LED3	SW6-10 is OFF and SW4-1-10 are OFF	In operation(Lit)/In stop(Unlit)
	SW6-10 is ON	Function setting by SW4 enable(Lit)/disable(Unlit)
LED101	Normal operation(Lit)/IC Error(Unlit)	

*8.Difference of appliance.

Model name	Appliance
PUHY,TUHY	*8 exist
PURY,TURY	*8 do not exist

*9.Difference of appliance.

Model name	Appliance
PUHY,TUHY	LEV9
PURY,TURY	LEV2d

*10.Difference of appliance.

Model name	Appliance
PUHY,TUHY	LEV1
PURY,TURY	LEV9

*11.Difference of appliance.

Model name	Appliance
PUHY-P,PURY,TUHYP,TURY	*11 do not exist
PUHY-EP,TUHYE	*11 exist

*12.Difference of appliance.

Model name	Appliance
PUHY-EP,PURY-EP,TUHYE,TURYE	*12 exist
PUHY-P,PURY-P,TUHYP,TURYP	*12 do not exist

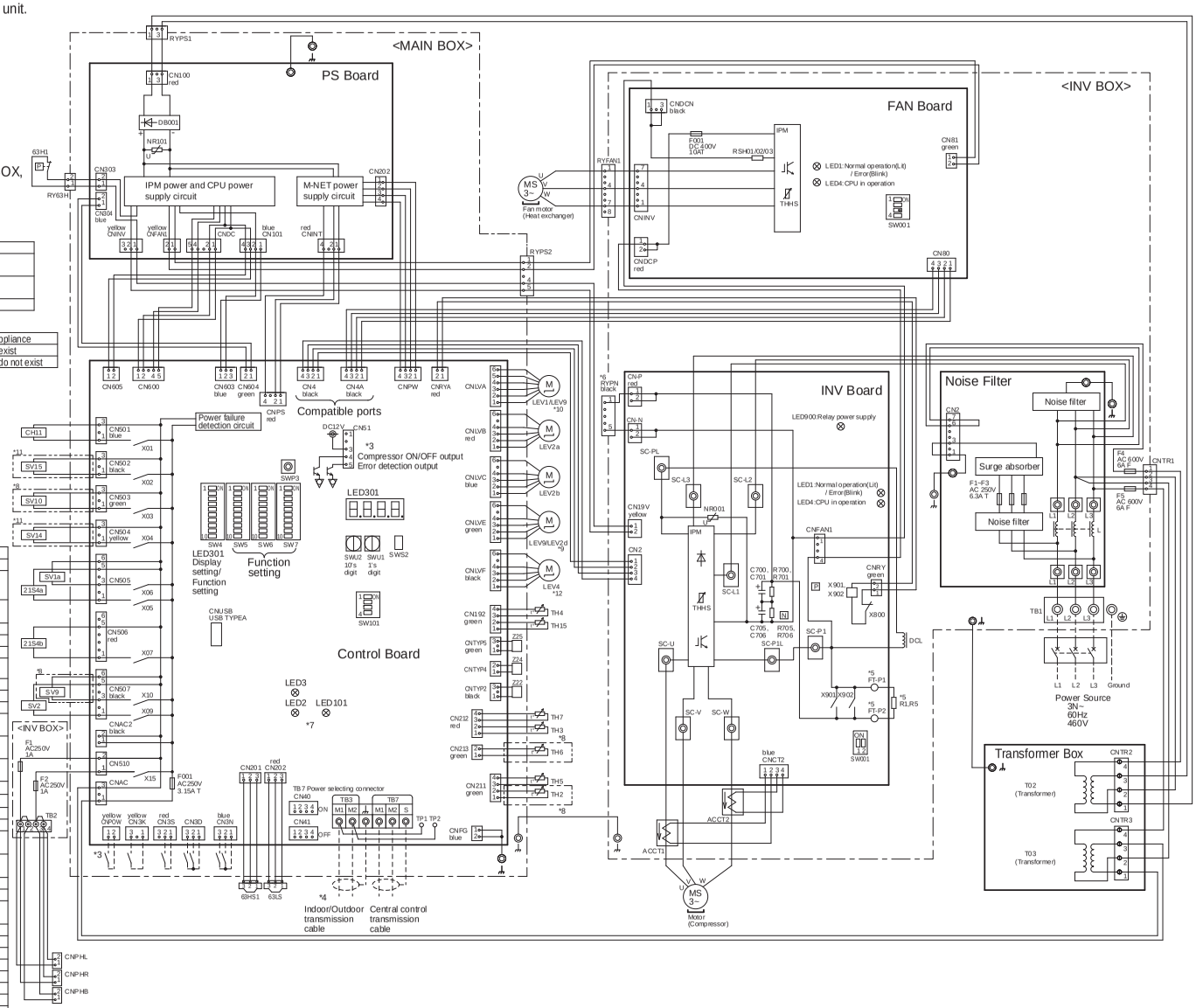

<Symbol explanation>

Symbol	Explanation	
21S4a	4-way valve	Cooling/Heating switching
21S4b		Heat exchanger capacity control(only PUHY model). Cooling/Heating switching
63H1	Pressure switch	High pressure protection for the outdoor unit
63HS1	Pressure sensor	Discharge pressure
63LS		Low pressure
ACCT1,ACCT2	Current sensor(AC)	
C700,C701, C705,C706	Capacitor(inverter main circuit)	
CH11	Crankcase heater (for heating the compressor)	
DCL	DC reactor	
L	Choke coil (for high frequency noise reduction)	
LEV1 *10	Linear expansion valve	HIC bypass,Controls refrigerant flow in HIC circuit
LEV2a,b		Pressure control,Refrigerant flow rate control
LEV2d *9		Pressure control,Refrigerant flow rate control
LEV4 *12		For opening/closing the injection circuit
LEV9 *9,10		Heat exchanger for inverter
R1,5	Resistor	For inrush current prevention
RSH01/02/03		For current detection
SV1a	Solenoid valve	For opening/closing the bypass circuit under the O/S
SV2		For opening/closing the discharge suction bypass
SV9 *8		For opening/closing the bypass circuit
SV10 *8		For continuous heating
SV14,15 *11		For changing refrigerant flow (cooling/heating)
TB1	Terminal block	Power supply
TB2		Heater transmission line
TB3		Indoor/Outdoor transmission line
TB7		Central control transmission line
TH2 *8	Thermistor	Subcool bypass outlet temperature
TH3		Pipe temperature
TH4		Discharge pipe temperature
TH5		ACC inlet pipe temperature
TH6 *8		Subcooled liquid refrigerant temperature
TH7		OA temperature
TH15		Compressor shell bottom temperature
THHS		IPM temperature
X901,X902	Magnetic relay(inverter main circuit)	
Z22,Z24,Z25	Function setting connector	

(12) PURY-(E)P96, (E)P120, (E)P144YNU-A1

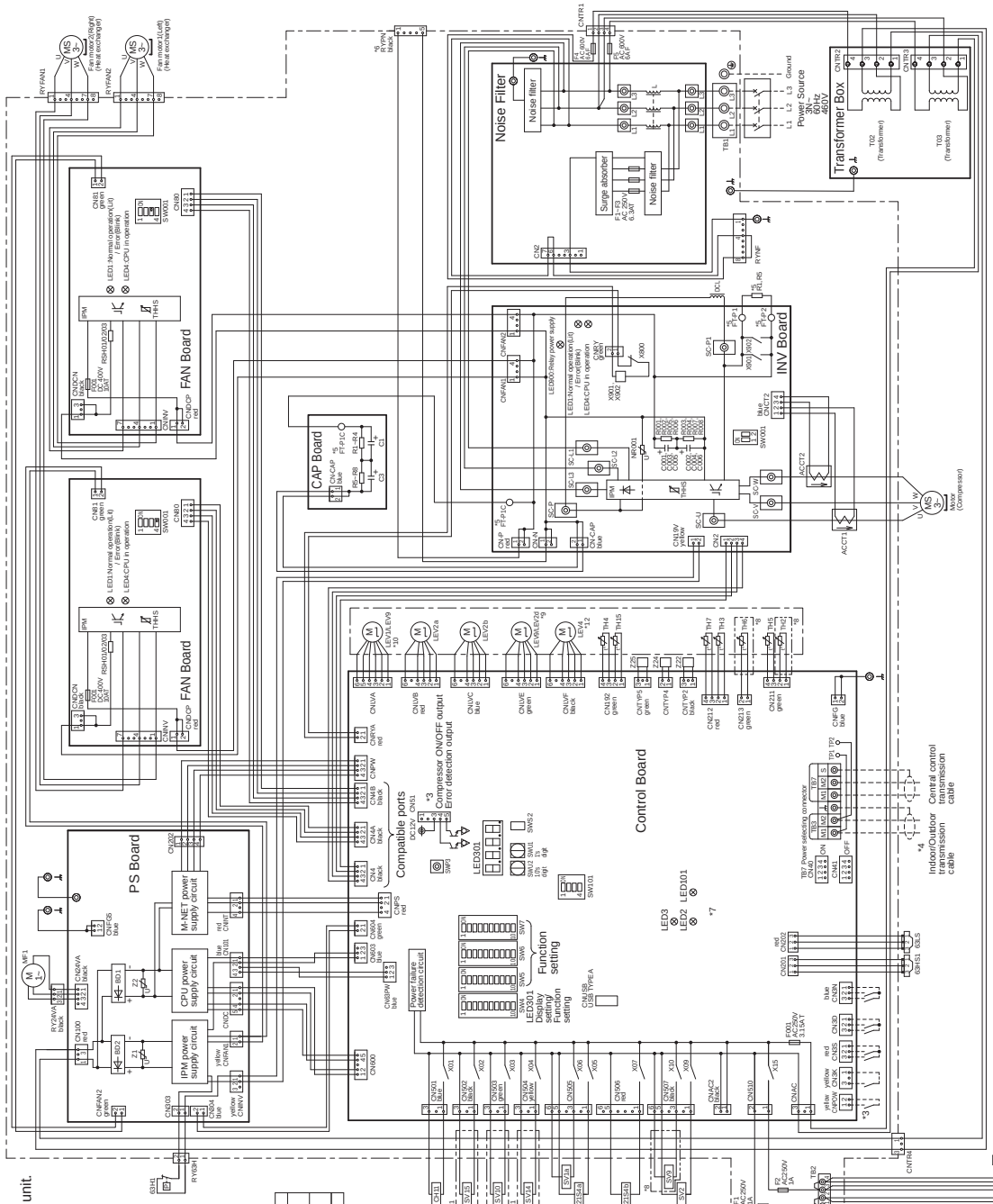

*1.Single-dotted lines indicate wiring not supplied with the unit.
*2.Dot-dash lines indicate the control box boundaries.
*3.Refer to the Data book for connecting input/output signal connectors.
*4.Daisy-chain terminals (TB3) on the outdoor units in the same refrigerant system together.
*5.Faston terminals have a locking function. Make sure the terminals are securely locked in place after insertion. Press the tab on the terminals to removed them.
*6.Control box houses high-voltage parts. Before inspecting the inside of the control box,turn off the power,keep the unit off for at least 10 minutes, and confirm that the voltage of the connector RYPN has dropped to DC20V or less.
*7.Control board LED display.

LED2	Normal operation(Lit)/Error(Blink)
LED3	SW6-10 is OFF and in operation(Lit)/In stop(Unlit) SW6-10 is ON	Function setting by SW4 enable(Lit)/disable(Unlit)
LED101	Normal operation(Lit)/IC Error(Unlit)

*8.Difference of appliance.

Model name	Appliance
PURY,TURY	*8 exist
PURY,TURY	*8 do not exist

*9.Difference of appliance.

Model name	Appliance
PURY,TURY	LEV9
PURY,TURY	LEV2d

*10.Difference of appliance.

Model name	Appliance
PURY,TURY	LEV1
PURY,TURY	LEV9

*11.Difference of appliance.

Model name	Appliance
PUHY-P,PURY,TUHY,PTURY	*11 do not exist
PUHY-EP,TUHYE	*11 exist

*12.Difference of appliance.

Model name	Appliance
PUHY-EP,PURY-EP,TUHYE,TURYE	*12 exist
PUHY-P,PURY-P,TUHY-P,TURYP	*12 do not exist

<Symbol explanation>

Symbol		Explanation
21S4a 21S4b	4-way valve	Cooling/Heating switching Heat exchanger capacity control(only PUHY model)
63H1	Pressure switch	Cooling/heating switching High pressure protection for the outdoor unit
63HS1	Pressure sensor	Discharge pressure
63LS		Low pressure
ACCT1,ACCT2		Current sensor(AC)
C4,C3		Capacitor (Inverter main circuit)
C001~C006		Crankcase heater (for heating the compressor)
CH11		DC reactor
DCL		Choke coil (for high frequency noise reduction)
L		Fan motor(for cooling in control box)
LEV1 *10	Linear expansion valve	HIC bypass,Controls refrigerant flow in HIC circuit
LEV2a,b		Pressure control,Refrigerant flow rate control
LEV2d *9		Pressure control,Refrigerant flow rate control
LEV4 *12		For opening/closing the injection circuit
LEV9 *9,10		Heat exchanger for inverter
MF1		Fan motor(for cooling in control box)
R1,5	Resistor	For inrush current prevention
RSH01/02/03		For current detection
SV1a	Solenoid valve	For opening/closing the bypass circuit under the O/S
SV2		For opening/closing the discharge suction bypass
SV9 *8		For opening/closing the bypass circuit
SV10 *8		For continuous heating
SV14,15 *11		For changing refrigerant flow (cooling/heating)
TB1	Terminal block	Power supply
TB2		Heater transmission line
TB3		Indoor/Outdoor transmission line
TB7		Central control transmission line
TH2 *8	Thermistor	Subcool bypass outlet temperature
TH3		Pipe temperature
TH4		Discharge pipe temperature
TH5		ACC inlet pipe temperature
TH6 *8		Subcooled liquid refrigerant temperature
TH7		OA temperature
TH15		Compressor shell bottom temperature
THHS		IPM temperature
X901,X902	Magnetic relay	(Inverter main circuit)
Z22,24,25	Function setting connector	

(13) PURY-P168YNU-A1

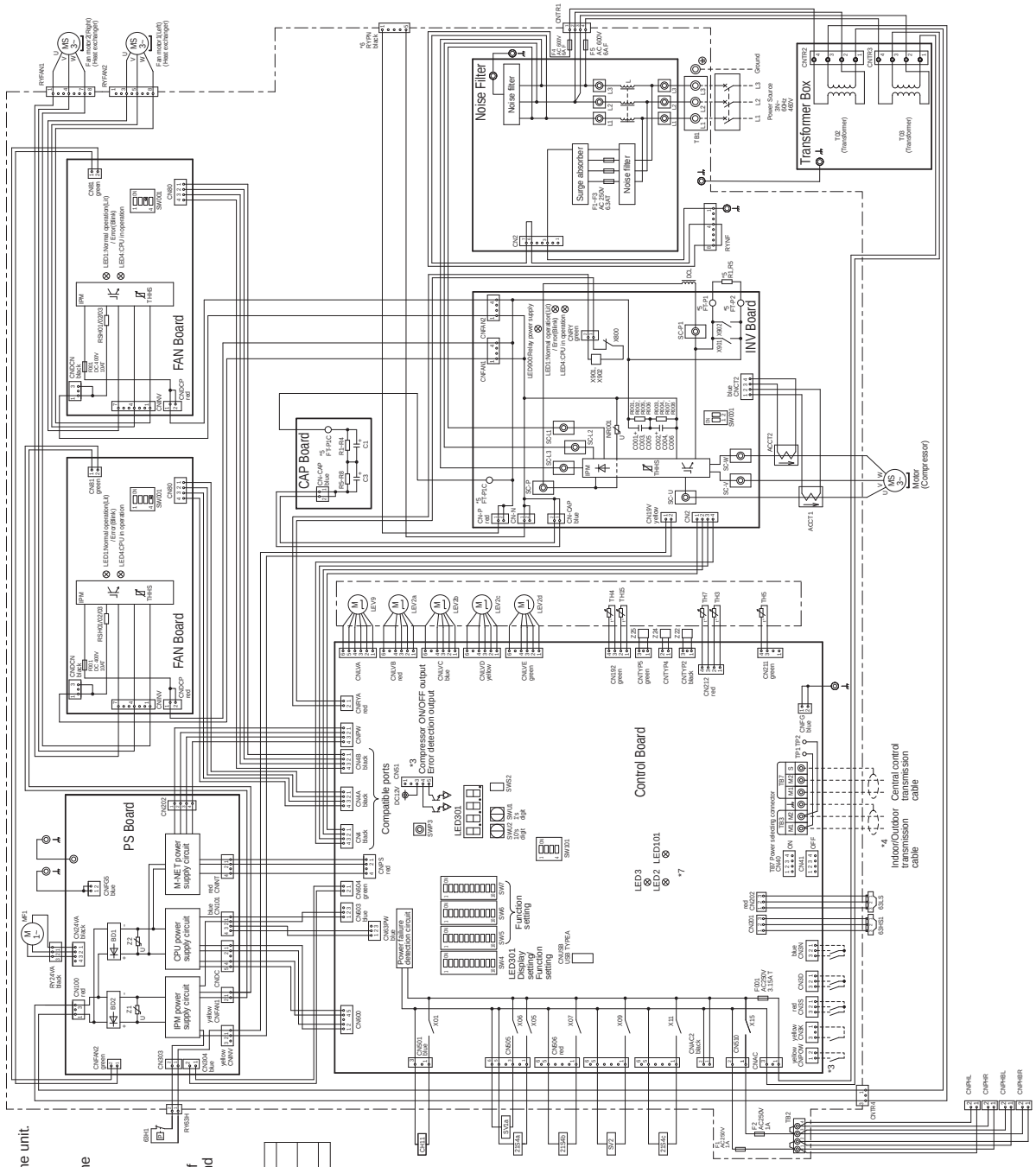

*1.Single-dotted lines indicate wiring not supplied with the unit.
*2.Dot-dash lines indicate the control box boundaries.
*3.Refer to the Data book for connecting input/output signal connectors.
*4.Daisy-chain terminals (TB3) on the outdoor units in the same refrigerant system together.
*5.Faston terminals have a locking function. Make sure the terminals are securely locked in place after insertion. Press the tab on the terminals to removed them.
*6.Control box houses high-voltage parts. Before inspecting the inside of the control box,turn off the power,keep the unit off for at least 10 minutes, and confirm that the voltage of the connector RYPN has dropped to DC20V or less.
*7.Control board LED display.

LED2	Normal operation(Lit)/Error(Blink)	
LED3	SW6-10 is OFF and SW6-2 ~ 10 are OFF	In operation(Lit)/In stop(Unlit)
	SW6-10 is ON	Function setting by SW4 enable(Lit)/disable(Unlit)
LED101	Normal operation(Lit)/IC Error(Unlit)	

<Symbol explanation>

Symbol		Explanation
21S4a	4-way valve	Cooling/Heating switching
21S4b,c		Heat exchanger capacity control(only PUHY model) Cooling/Heating switching
63H1	Pressure switch	High pressure protection for the outdoor unit
63HS1	Pressure sensor	Discharge pressure
63LS		Low pressure
ACCT1,ACCT2	Current sensor(AC)	
C1,C3, C001~C006	Capacitor (inverter main circuit)	
CH11	Crankcase heater (for heating the compressor)	
DCL	DC reactor	
L	Choke coil (for high frequency noise reduction)	
LEV2a,b,c	Linear expansion valve	Pressure control,Refrigerant flow rate control
LEV2d		Pressure control,Refrigerant flow rate control
LEV9		Heat exchanger for inverter
MF1	Fan motor(for cooling in control box)	
R1,5	Resistor	For inrush current prevention
RSH01/02/03		For current detection
SV1a	Solenoid valve	For opening/dosing the bypass circuit under the O/S
SV2		For opening/dosing the discharge suction bypass
TB1	Terminal block	Power supply
TB2		Heater transmission line
TB3		Indoor/Outdoor transmission line
TB7		Central control transmission line
TH3	Thermistor	Pipe temperature
TH4		Discharge pipe temperature
TH5		ACC inlet pipe temperature
TH7		OA temperature
TH15		Compressor shell bottom temperature
THHS		IPM temperature
X901,X902	Magnetic relay(inverter main circuit)	
Z22,24,25	Function setting connector	

(14) PURY-EP168YNU-A1

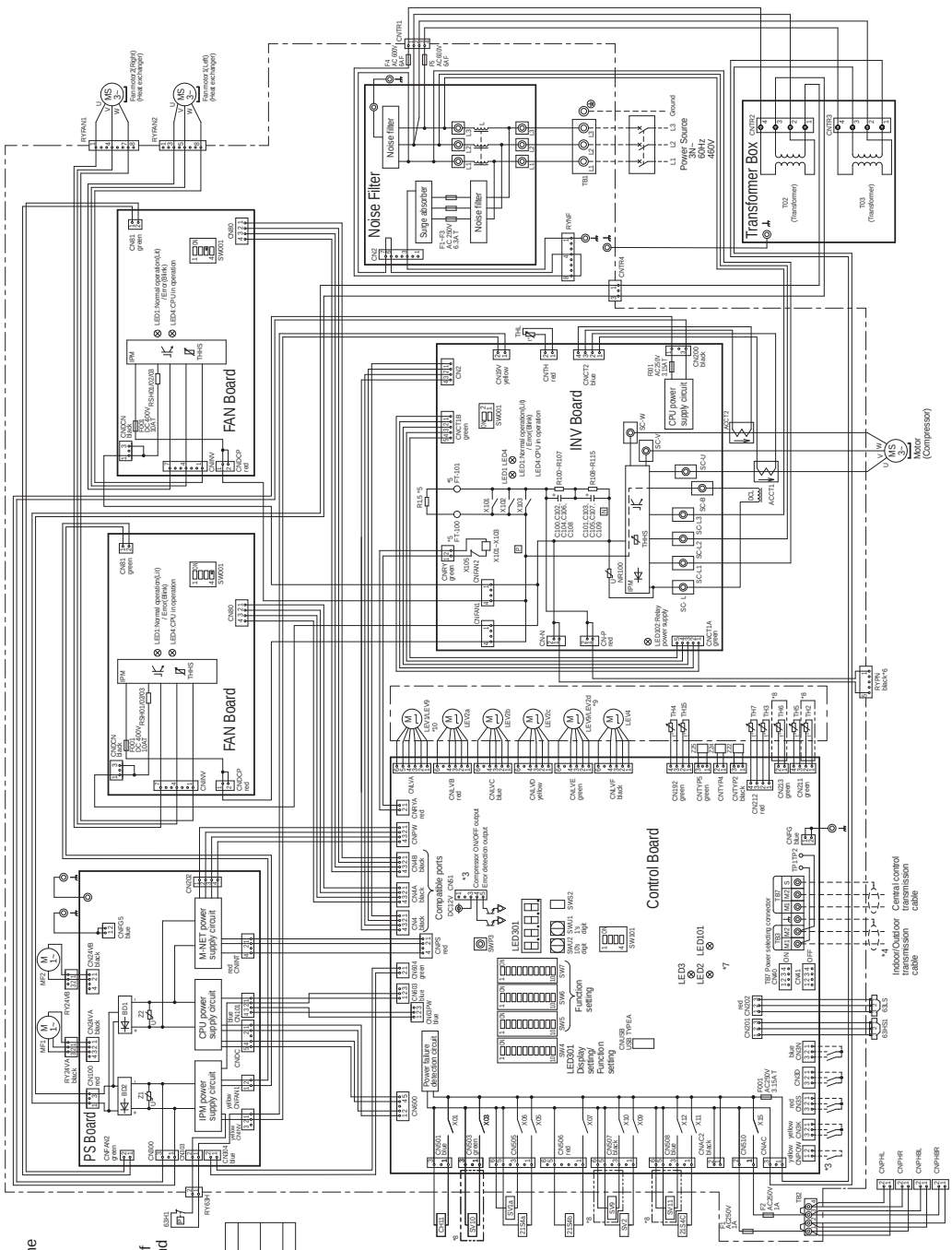

*1.Single-dotted lines indicate wiring not supplied with the unit.
*2.Dot-dash lines indicate the control box boundaries.
*3.Refer to the Data book for connecting input/output signal connectors.
*4.Daisy-chain terminals (TB3) on the outdoor units in the same refrigerant system together.
*5.Faston terminals have a locking function.
Make sure the terminals are securely locked in place after insertion. Press the tab on the terminals to removed them.
*6.Control box houses high-voltage parts.
Before inspecting the inside of the control box,turn off the power,keep the unit off for at least 10 minutes, and confirm that the voltage of the connector RYPN has dropped to DC20V or less.
*7.Control board LED display.

LED2	Normal operation(Lit)/Error(Blink)
LED3	SW6-10 is OFF and In operation(Lit)/In stop(Unlit)
	SW4-1~10 are OFF Function setting by SW4 enable(Lit)/disable(Unlit)
	SW6-10 is ON
LED101	Normal operation(Lit)/IC Error(Unlit)

*8.Difference of appliance.

Model name	Appliance
PURY,TURY	LEV9
PURY,TURY	*8 do not exist
PURY,TURY	*8 exist

*9.Difference of appliance.

Model name	Appliance
PURY,TURY	LEV9
PURY,TURY	LEV2a

*10.Difference of appliance.

Model name	Appliance
PUHY,TUHY	LEV1
PURY,TURY	LEV9

<Symbol explanation>

Symbol	Explanation
21S4a	4-way valve Cooling/Heating switching
21S4b,c	Heat exchanger capacity control(only PUHY model) Cooling/Heating switching
63H1	Pressure switch High pressure protection for the outdoor unit
63HS1	Pressure sensor Discharge pressure
63LS	Pressure sensor Low pressure
ACCT1,ACCT2	Current sensor(AC)
C100~C109	Capacitor (inverter main circuit)
CH11	Crankcase heater (for heating the compressor)
DCL	DC reactor
L	Choke coil (for high frequency noise reduction)
LEV1 *10	Linear expansion valve HIC bypass,Controls refrigerant flow in HIC circuit
LEV2a,b,c	Pressure control,Refrigerant flow rate control
LEV2d *9	Pressure control,Refrigerant flow rate control
LEV4	For opening/closing the injection circuit
LEV9 *9,10	Heat exchanger for inverter
MF1,2	Fan motor(for cooling in control box)
R1,5	Resistor For inrush current prevention
RSH01/02/03	For current detection
SV1a	Solenoid valve For opening/closing the bypass circuit under the O/S
SV2	For opening/closing the discharge suction bypass
SV9 *8	For opening/closing the bypass circuit
SV10,11 *8	For continuous heating
TB1	Terminal block Power supply
TB2	Heater transmission line
TB3	Indoor/Outdoor transmission line
TB7	Central control transmission line
TH2 *8	Thermistor Subcool bypass outlet temperature
TH3	Pipe temperature
TH4	Discharge pipe temperature
TH5	ACC inlet pipe temperature
TH6 *8	Subcooled liquid refrigerant temperature
TH7	OA temperature
TH15	Compressor shell bottom temperature
THHS	IPM temperature
X101~X103	Magnetic relay(inverter main circuit)
Z22,24,25	Function setting connector

(15) PURY-EP192, EP216, EP240YNU-A1

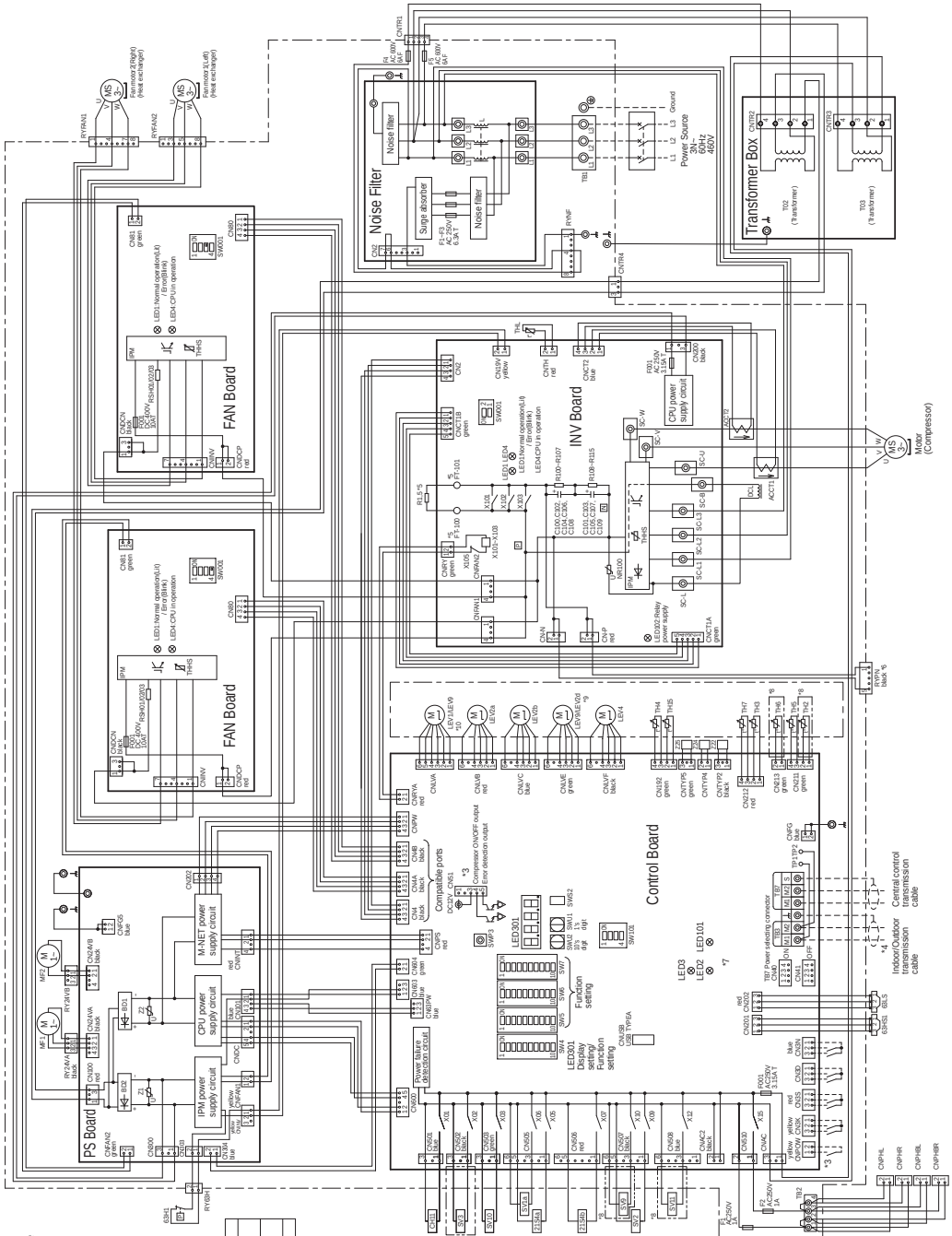

*1.Single-dotted lines indicate wiring not supplied with the unit.
*2.Dot-dash lines indicate the control box boundaries.
*3.Refer to the Data book for connecting input/output signal connectors.
*4.Daisy-chain terminals (TB3) on the outdoor units in the same refrigerant system together.
*5.Faston terminals have a locking function. Make sure the terminals are securely locked in place after insertion. Press the tab on the terminals to removed them.
*6.Control box houses high-voltage parts. Before inspecting the inside of the control box,turn off the power,keep the unit off for at least 10 minutes, and confirm that the voltage of the connector RYPN has dropped to DC20V or less.
*7.Control board LED display.

LED2	Normal operation(Lit)/Error(Blink)
LED3	SW6-10 is OFF and SW4-1~10 are OFF: In operation(Lit)/In stop(Unlit) SW6-10 is ON: Function setting by SW4 enabled(Lit)/disabled(Unlit)
LED101	Normal operation(Lit)/IC Error(Unlit)

*8.Difference of appliance.

Model name	Appliance
PURY,TURY	*8 do not exist
PUHY,TUHY	*8 exist

*9.Difference of appliance.

Model name	Appliance
PUHY,TUHY	LEV9
PURY,TURY	LEV2d

*10.Difference of appliance.

Model name	Appliance
PUHY,TUHY	LEV1
PURY,TURY	LEV9

*11.Difference of appliance.

Model name	Appliance
PUHY,TUHY	*11 do not exist
PURY,TURY	*11 exist

<Symbol explanation>

Symbol		Explanation
21S4a	4-way valve	Cooling/Heating switching
21S4b		Heat exchanger capacity control(only PUHY model) Cooling/heating switching
63H1	Pressure switch	High pressure protection for the outdoor unit
63HS1	Pressure sensor	Discharge pressure
63LS		Low pressure
ACCT1,ACCT2	Current sensor(AC)	
C100~C109	Capacitor	(inverter main circuit)
CH11	Crankcase heater	(for heating the compressor)
DCL	DC reactor	
L	Choke coil	(for high frequency noise reduction)
LEV1 *10	Linear expansion valve	HIC bypass,Controls refrigerant
LEV2a,b		Pressure control,Refrigerant flow rate control
LEV2d *9		Pressure control,Refrigerant flow rate control
LEV4		For opening/closing the injection circuit
LEV9 *9,10		Heat exchanger for inverter
MF1,2	Fan motor	(for coding in control box)
R1,5	Resistor	For inrush current prevention
RSH01/02/03		For current detection
SV1a	Solenoid valve	For opening/closing the bypass circuit under the O/S
SV2		For opening/closing the discharge suction bypass
SV3 *11, SV6 *8		For opening/closing the bypass circuit
SV10, SV11 *8		For continuous heating
TB1	Terminal block	Power supply
TB2		Heater transmission line
TB3		Indoor/Outdoor transmission line
TB7		Central control transmission line
TH2 *8	Thermistor	Subcool bypass outlet temperature
TH3		Pipe temperature
TH4		Discharge pipe temperature
TH5		ACC inlet pipe temperature
TH6 *8		Subcooled liquid refrigerant temperature
TH7		OA temperature
TH15		Compressor shell bottom temperature
THHS		IPM temperature
X101~X103	Magnetic relay	(inverter main circuit)
Z22,24,25	Function setting connector	

(16) PURY-(E)P72TNU-A1

4 Electrical Components and Wiring Diagrams

*1.Single-dotted lines indicate wiring not supplied with the unit.
*2.Dot-dash lines indicate the control box boundaries.
*3.Refer to the Data book for connecting input/output signal connectors.
*4.Daisy-chain terminals (TB3) on the outdoor units in the same refrigerant system together.
*5.Faston terminals have a locking function.
Make sure the terminals are securely locked in place after insertion. Press the tab on the terminals to removed them.
*6.Control box houses high-voltage parts.
Before inspecting the inside of the control box,turn off the power,keep the unit off for at least 10 minutes, and confirm that the voltage of the connector RYPN has dropped to DC20V or less.
*7.Control board LED display.

LED2	Normal operation(Lit)/Error(Blink)	
LED3	SW6-10 is OFF and SW4-1~10 are OFF	In operation(Lit)/In stop(Unlit)
	SW6-10 is ON	Function setting by SW4 enable(Lit)/disable(Unlit)
LED101	Normal operation(Lit)/IC Error(Unlit)	

*8.Difference of appliance.

Model name	Appliance
PUHY,TUHY	*8 exist
PURY,TURY	*8 do not exist

*9.Difference of appliance.

Model name	Appliance
PUHY,TUHY	LEV9
PURY,TURY	LEV2d

*10.Difference of appliance.

Model name	Appliance
PUHY,TUHY	LEV1
PURY,TURY	LEV9

*11.Difference of appliance.

Model name	Appliance
PUHY-P,PURY,TUHYP,TURY	*11 do not exist
PUHY-EP,TUHYE	*11 exist

<Symbol explanation>

Symbol	Explanation	
21S4a	4-way valve	Cooling/Heating switching
21S4b		Heat exchanger capacity control(only PUHY model). Cooling/Heating switching
63H1	Pressure switch	High pressure protection for the outdoor unit
63HS1	Pressure sensor	Discharge pressure
63LS		Low pressure
ACCT1,ACCT2	Current sensor(AC)	
C1~C7	Capacitor (inverter main circuit)	
CH11	Crankcase heater (for heating the compressor)	
DCL	DC reactor	
L	Choke coil (for high frequency noise reduction)	
LEV1 *10	Linear expansion valve	HIC bypass,Controls refrigerant flow in HIC circuit
LEV2a,b		Pressure control,Refrigerant flow rate control
LEV2d *9		Pressure control,Refrigerant flow rate control
LEV4 *12		For opening/closing the injection circuit
LEV9 *9,10		Heat exchanger for inverter
R1	Resistor	For inrush current prevention
RSH01/02/03		For current detection
SV1a	Solenoid valve	For opening/closing the bypass circuit under the O/S
SV2		For opening/closing the discharge suction bypass
SV9 *8		For opening/closing the bypass circuit
SV10 *8		For continuous heating
SV14,15 *11		For changing refrigerant flow (cooling/heating)
TB1	Terminal block	Power supply
TB2		Heater transmission line
TB3		Indoor/Outdoor transmission line
TB7		Central control transmission line
TH2 *8	Thermistor	Subcool bypass outlet temperature
TH3		Pipe temperature
TH4		Discharge pipe temperature
TH5		ACC inlet pipe temperature
TH6 *8		Subcooled liquid refrigerant temperature
TH7		OA temperature
TH15		Compressor shell bottom temperature
THHS		IPM temperature
X901,X902	Magnetic relay(inverter main circuit)	
Z22,24,25	Function setting connector	

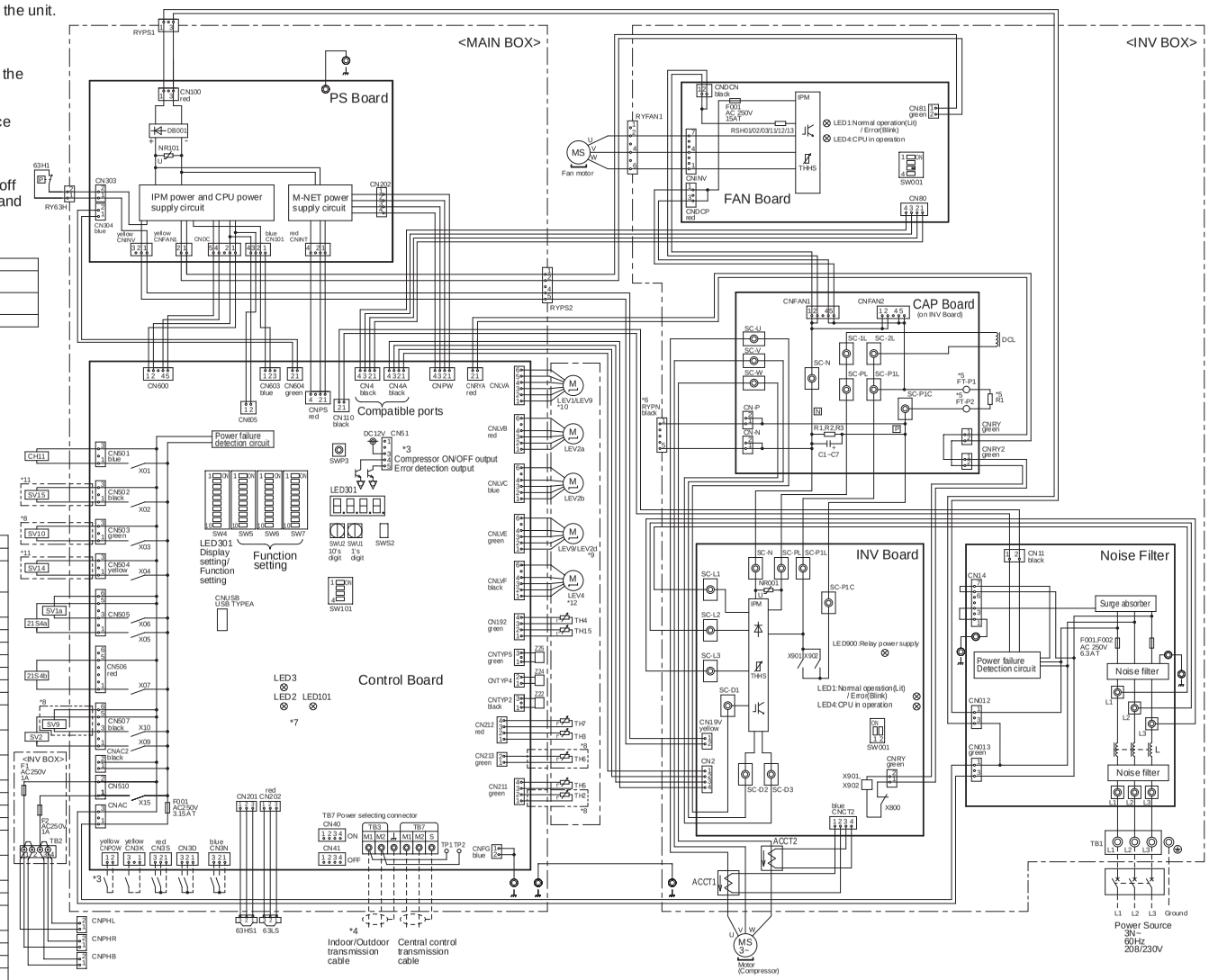

*12.Difference of appliance.

Model name	Appliance
PUHY-EP,PURY-EP,TUHYE,TURYE	*12 exist
PUHY-P,PURY-P,TUHYP,TURYP	*12 do not exist

(17) PURY-(E)P96, (E)P120, (E)P144TNU-A1

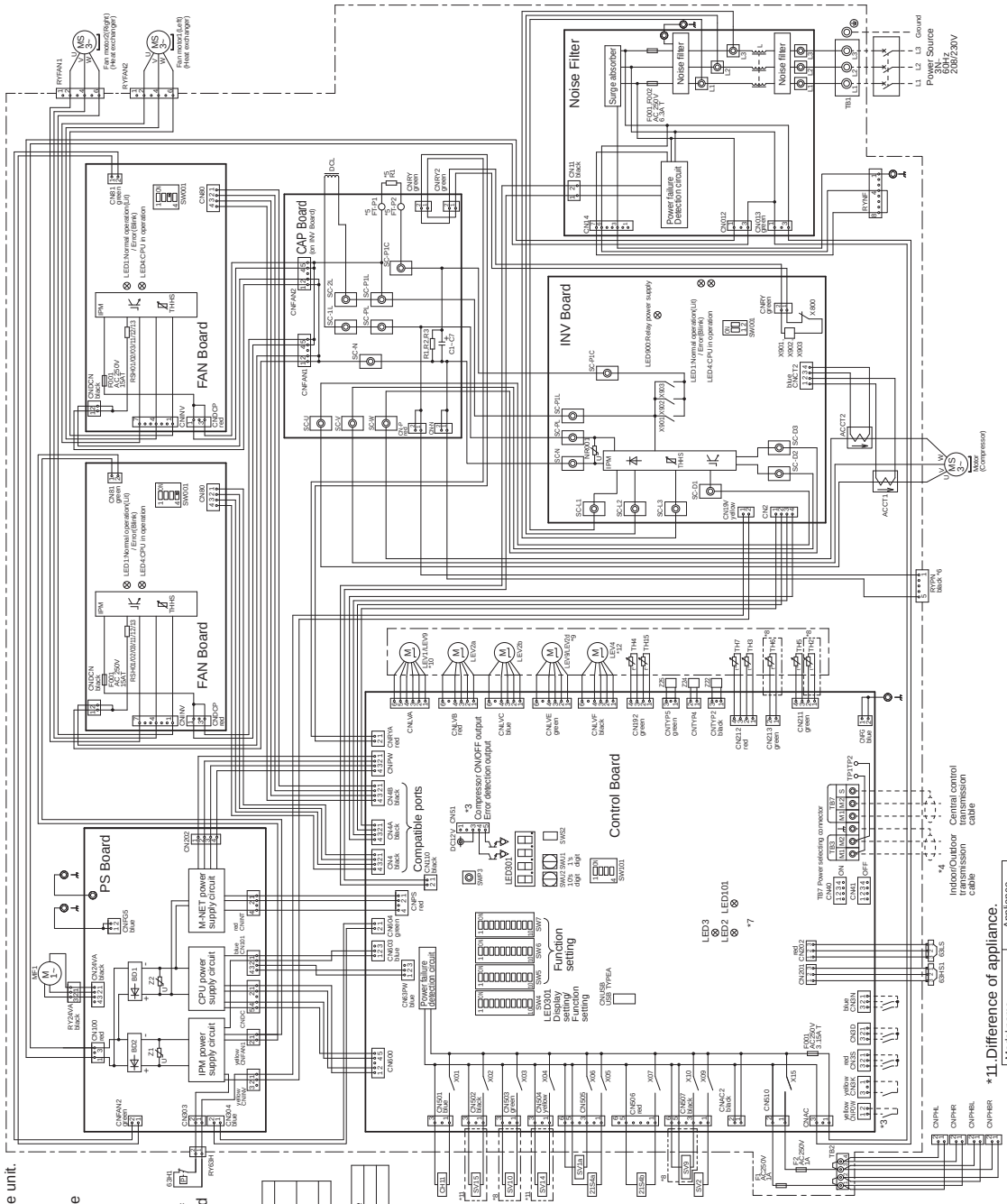

*1.Single-dotted lines indicate wiring not supplied with the unit.
*2.Dot-dash lines indicate the control box boundaries.
*3.Refer to the Data book for connecting input/output signal connectors.
*4.Daisy-chain terminals (TB3) on the outdoor units in the same refrigerant system together.
*5.Faston terminals have a locking function. Make sure the terminals are securely locked in place after insertion. Press the tab on the terminals to removed them.
*6.Control box houses high-voltage parts. Before inspecting the inside of the control box,turn off the power,keep the unit off for at least 10 minutes, and confirm that the voltage of the connector RYPN has dropped to DC20V or less.
*7.Control board LED display.

LED2	Normal operation(Lit)/Error(Blink)	
LED3	SW6-10 is OFF and SW4-1~10 are OFF	In operation(Lit)/In stop(Unit)
	SW6-10 is ON	Function setting by SW4 enable(Lit)/disable(Unit)
LED101	Normal operation(Lit)/IC Error(Unlit)	

*8.Difference of appliance.

Model name	Appliance
PUHY,TUHY	*8 exist
PURY,TURY	*8 do not exist

*9.Difference of appliance.

Model name	Appliance
PUHY,TUHY	LEV9
PURY,TURY	LEV2d

*10.Difference of appliance.

Model name	Appliance
PUHY,TUHY	LEV1
PURY,TURY	LEV9

*11.Difference of appliance.

Model name	Appliance
PUHY,P,PURY,TUHY,P,TURY	*11 do not exist
PUHY-EP,TUHYE	*11 exist

*12.Difference of appliance.

Model name	Appliance
PUHY-EP,PURY-EP,TUHYE,TURYE	*12 exist
PUHY-P,PURY-P,TUHY-P,TURY-P	*12 do not exist

<Symbol explanation>

Symbol		Explanation
21S4a	4-way valve	Cooling/Heating switching
21S4b		Heat exchanger capacity control(only PUHY model). Cooling/Heating switching
63H1	Pressure switch	High pressure protection for the outdoor unit
63HS1	Pressure sensor	Discharge pressure
63LS		Low pressure
ACCT1,ACCT2	Current sensor(AC)	
C1-C7	Capacitor (inverter main circuit)	
CH11	Crankcase heater (for heating the compressor)	
DCL	DC reactor	
L	Choke coil (for high frequency noise reduction)	
LEV1 *10	Linear expansion valve	HIC bypass,Controls refrigerant flow in HIC circuit
LEV2a,b		Pressure control,Refrigerant flow rate control
LEV2d *9		Pressure control,Refrigerant flow rate control
LEV4 *12		For opening/closing the injection circuit
LEV9 *9,10		Heat exchanger for inverter
MF1	Fan motor(for cooling in control box)	
R1	Resistor	For inrush current prevention
RSH01/02/03		For current detection
SV1a	Solenoid valve	For opening/closing the bypass circuit under the O/S
SV2		For opening/closing the discharge suction bypass
SV9 *8		For opening/closing the bypass circuit
SV10 *8		For continuous heating
SV14 *11		For changing refrigerant flow (cooling/heating)
SV15 *11		For changing refrigerant flow (cooling/heating)
TB1	Terminal block	Power supply
TB2		Heater transmission line
TB3		Indoor/Outdoor transmission line
TB7		Central control transmission line
TH2 *8	Thermistor	Subcool bypass outlet temperature
TH3		Pipe temperature
TH4		Discharge pipe temperature
TH5		ACC inlet pipe temperature
TH6 *8		Subcooled liquid refrigerant temperature
TH7		OA temperature
TH11		Compressor shell bottom temperature
THHS		PM temperature
X901-X903	Magnetic relay(Inverter main circuit)	
Z22,24,25	Function setting connector	

(18) PURY-P168TNU-A1

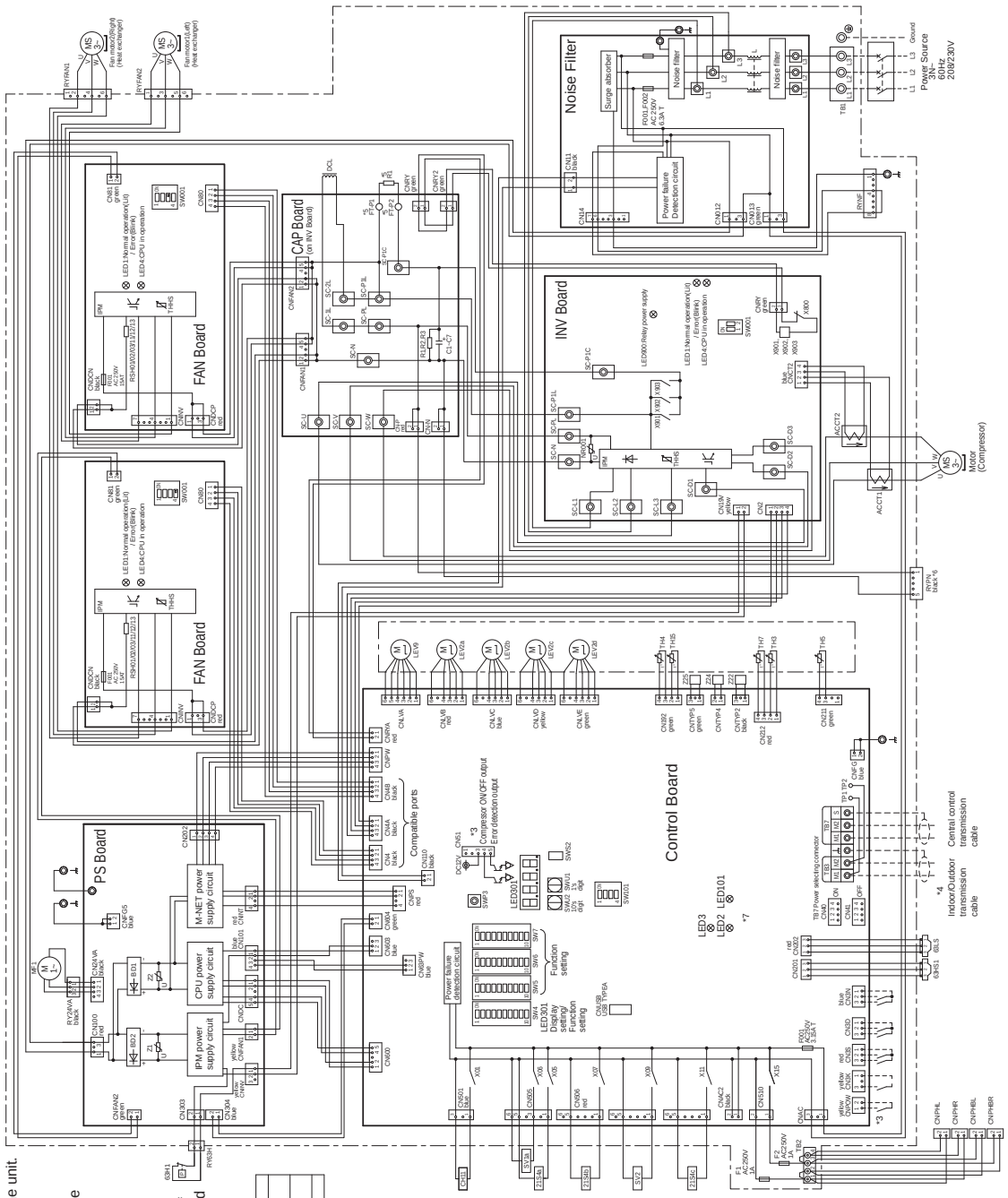

*1.Single-dotted lines indicate wiring not supplied with the unit.
*2.Dot-dash lines indicate the control box boundaries.
*3.Refer to the Data book for connecting input/output signal connectors.
*4.Daisy-chain terminals (TB3) on the outdoor units in the same refrigerant system together.
*5.Faston terminals have a locking function. Make sure the terminals are securely locked in place after insertion. Press the tab on the terminals to removed them.
*6.Control box houses high-voltage parts. Before inspecting the inside of the control box,turn off the power,keep the unit off for at least 10 minutes, and confirm that the voltage of the connector RYPN has dropped to DC20V or less.
*7.Control board LED display.

LED2	Normal operation(Lit)/Error(Blink)	
LED3	SW6-10 is OFF and SW4-1~10 are OFF	In operation(Lit)/In stop(Unit)
	SW6-10 is ON	Function setting by SW4 enable(Lit)/disable(Unit)
LED101	Normal operation(Lit)/IC Error(Unit)	

<Symbol explanation>

Symbol		Explanation
21S4a	4-way valve	Cooling/Heating switching
21S4b,c		Heat exchanger capacity control(only Heat exchanger) Cooling/Heating switching
63H1	Pressure switch	High pressure protection for the outdoor unit
63HS1	Pressure sensor	Discharge pressure
63LS		Low pressure
ACCT1,ACCT2	Current sensor(AC)	
C1~C7	Capacitor (inverter main circuit)	
CH11	Crankcase heater (for heating the compressor)	
DCL	DC reactor	
L	Choke coil (for high frequency noise reduction)	
LEV2a,b,c	Linear expansion valve	Pressure control,Refrigerant flow rate control
LEV2d		Pressure control,Refrigerant flow rate control
LEV9		Heat exchanger for inverter
MF1	Fan motor(for cooling in control box)	
R1	Resistor	For inrush current prevention
RSH01/02/03		For current detection
SV1a	Solenoid valve	For opening/closing the bypass circuit under the O/S
SV2		For opening/closing the discharge suction bypass
TB1	Terminal block	Power supply
TB2		Heater transmission line
TB3		Indoor/Outdoor transmission line
TB7		Central control transmission line
TH3	Thermistor	Pipe temperature
TH4		Discharge pipe temperature
TH5		ACC inlet pipe temperature
TH7		OA temperature
TH15		Compressor shell bottom temperature
THHS		IPM temperature
X901~X903	Magnetic relay(inverter main circuit)	
Z22,24,25	Function setting connector	

(19) PURY-EP168TNU-A1

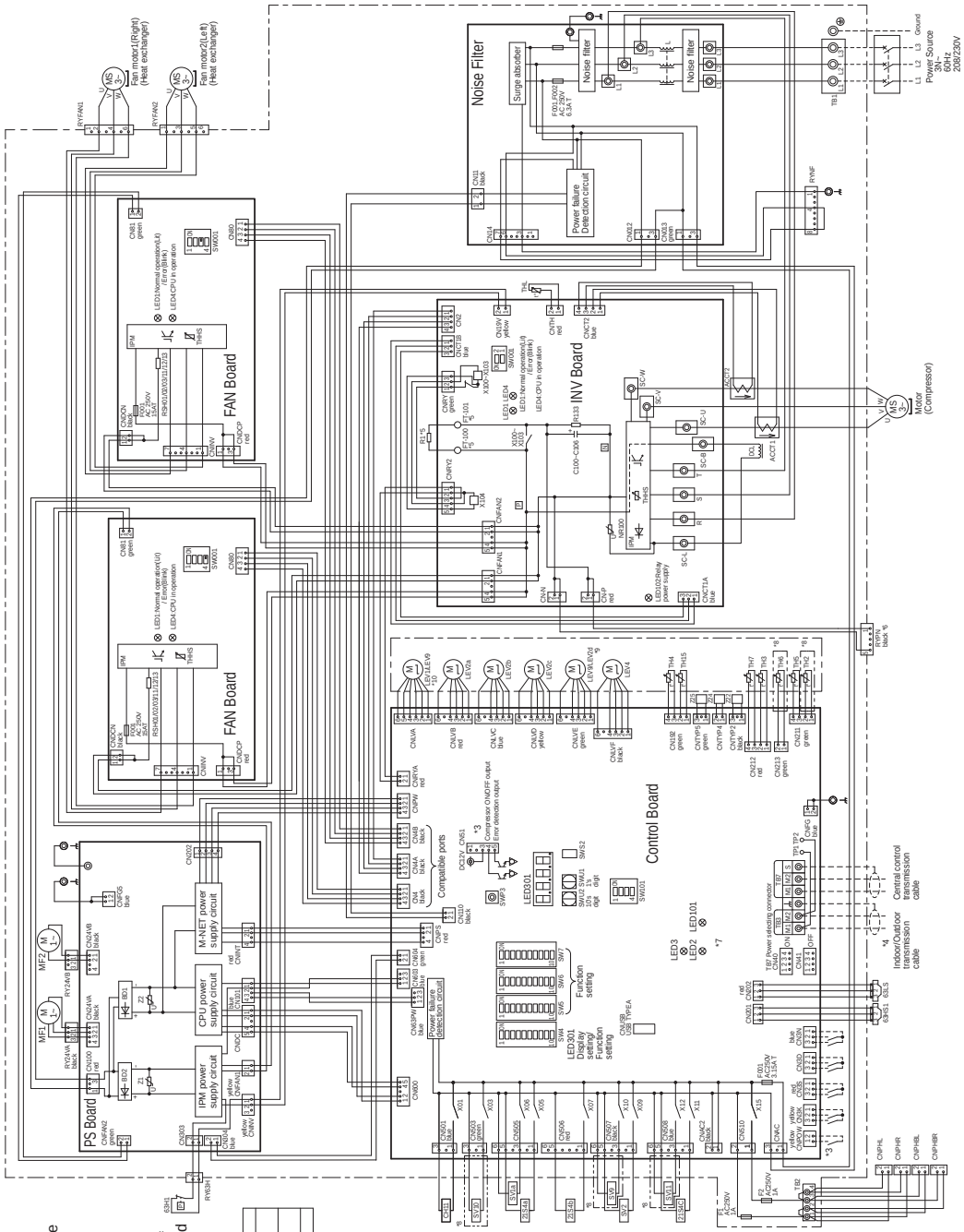

*1.Single-dotted lines indicate wiring not supplied with the unit.
*2.Dot-dash lines indicate the control box boundaries.
*3.Refer to the Data book for connecting input/output signal connectors.
*4.Daisy-chain terminals (TB3) on the outdoor units in the same refrigerant system together.
*5.Faston terminals have a locking function. Make sure the terminals are securely locked in place after insertion. Press the tab on the terminals to removed them.
*6.Control box houses high-voltage parts. Before inspecting the inside of the control box,turn off the power,keep the unit off for at least 10 minutes, and confirm that the voltage of the connector RYPN has dropped to DC20V or less.
*7.Control board LED display.

LED2	Normal operation(Lit)/Error(Blink)
LED3	SW6-10 is OFF and SW4-1~10 are OFF: In operation(Lit)/In stop(Unlit)
	SW6-10 is ON: Function setting by SW4 enabled(Lit)/disabled(Unlit)
LED101	Normal operation(Lit)/IC Error(Unlit)

*8.Difference of appliance.

Model name	Appliance
PUHY,TUHY	*8 exist
PURY,TURY	*8 do not exist

*9.Difference of appliance.

Model name	Appliance
PUHY,TUHY	LEV9
PURY,TURY	LEV2d

*10.Difference of appliance.

Model name	Appliance
PUHY,TUHY	LEV1
PURY,TURY	LEV9

<Symbol explanation>

Symbol	Explanation	
21S4a	4-way valve	Cooling/Heating switching
21S4b,c		Heat exchanger capacity control(only PUHY model)
63H1	Pressure switch	Cooling/heating switching High pressure protection for the outdoor unit
63HS1	Pressure sensor	Discharge pressure
63LS		Low pressure
ACCT1,ACCT2	Current sensor(AC)	
C100~C107	Capacitor (inverter main circuit)	
CH11	Crankcase heater (for heating the compressor)	
DCL	DC reactor	
L	Choke coil (for high frequency noise reduction)	
LEV1 *10	Linear expansion valve	HIC bypass,Controls refrigerant flow in HIC circuit
LEV2a,b,c		Pressure control,Refrigerant flow rate control
LEV2d *9		Pressure control,Refrigerant flow rate control
LEV4		For opening/closing the injection circuit
LEV9 *9,10		Heat exchanger for inverter
MF1,2	Fan motor(for cooling in control box)	
R1	Resistor	For inrush current prevention
RSH01,02/03		For current detection
SV1a	Solenoid valve	For opening/closing the bypass circuit under the O/S
SV2		For opening/closing the discharge suction bypass
SV9 *8		For opening/closing the bypass circuit
SV10 *8		For continuous heating
SV11 *8		For continuous heating
TB1	Terminal block	Power supply
TB2		Heater transmission line
TB3		Indoor/Outdoor transmission line
TB7		Central control transmission line
TH2 *8	Thermistor	Subcool bypass outlet temperature
TH3		Pipe temperature
TH4		Discharge pipe temperature
TH5		ACC inlet pipe temperature
TH6 *8		Subcooled liquid refrigerant temperature
TH7		OA temperature
TH15		Compressor shell bottom temperature
THHS		IPM temperature
X101~X103	Magnetic relay(inverter main circuit)	
Z22,24,25	Function setting connector	

(20) PURY-EP192, EP216, EP240TNU-A1

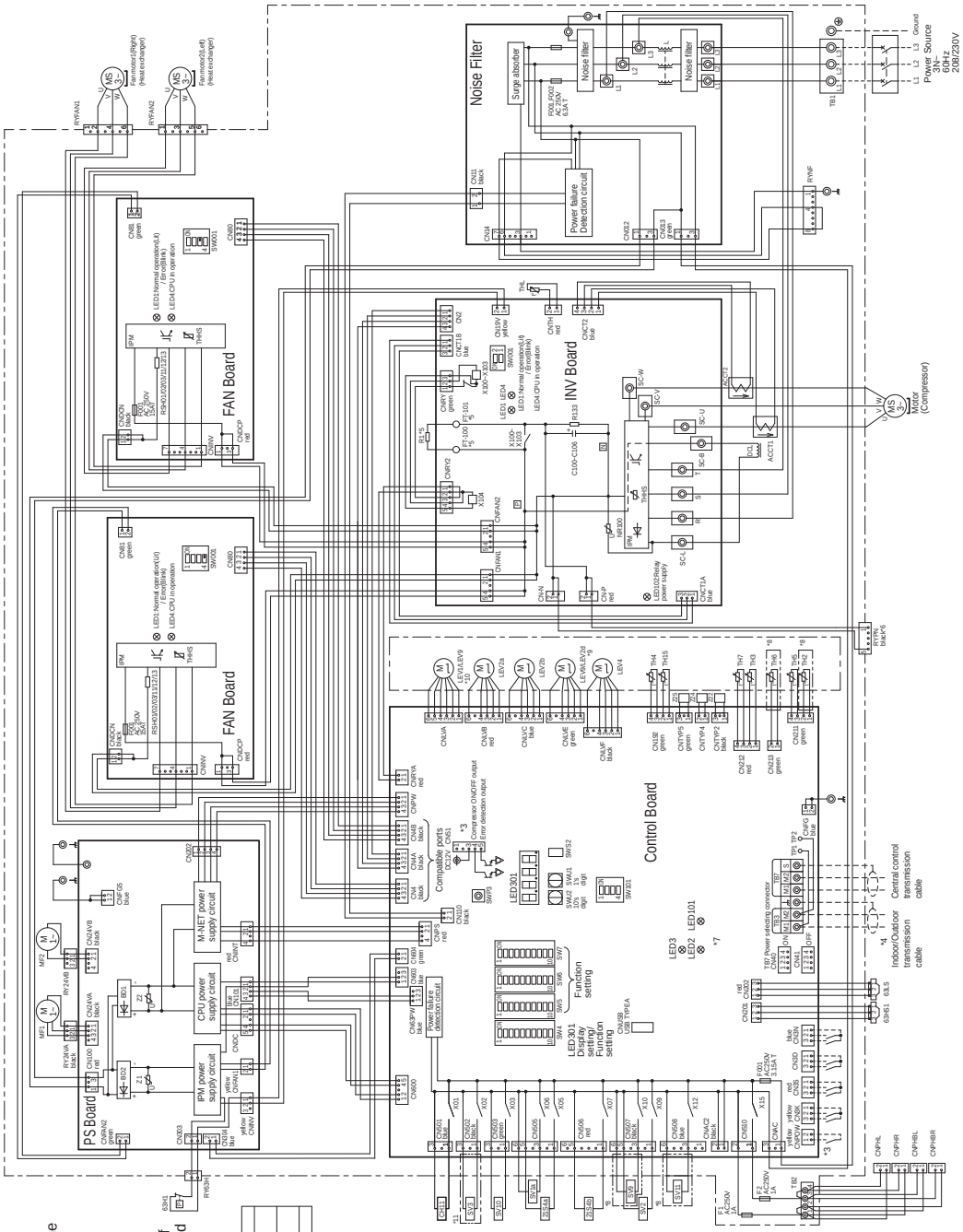

*1.Single-dotted lines indicate wiring not supplied with the unit.
*2.Dot-dash lines indicate the control box boundaries.
*3.Refer to the Data book for connecting input/output signal connectors.
*4.Daisy-chain terminals (TB3) on the outdoor units in the same refrigerant system together.
*5.Faston terminals have a locking function. Make sure the terminals are securely locked in place after insertion. Press the tab on the terminals to removed them.
*6.Control box houses high-voltage parts. Before inspecting the inside of the control box,turn off the power,keep the unit off for at least 10 minutes, and confirm that the voltage of the connector RYPN has dropped to DC20V or less.
*7.Control board LED display.

LED2	Normal operation(Lit)/Error(Blink)	
LED3	In operation(Lit)/In stop(Unlit)	
	SW4-10 is OFF and SW4-10 is OFF	Function setting by SW4 enable(Lit)/disable(Unlit)
	SW4-10 is ON	
LED101	Normal operation(Lit)/IC Error(Unlit)	

*8.Difference of appliance.

Model name	Appliance
PUHY/TUHY	*8 exist
PURY/TURY	*8 do not exist

*9.Difference of appliance.

Model name	Appliance
PUHY/TUHY	LEV9
PURY/TURY	LEV2d

*10.Difference of appliance.

Model name	Appliance
PUHY/TUHY	LEV1
PURY/TURY	LEV9

*11.Difference of appliance.

Model name	Appliance
PUHY/TUHY	*11 do not exist
PURY/TURY	*11 exist

<Symbol explanation>

Symbol		Explanation
21S4a	4-way valve	Cooling/Heating switching
21S4b		Heat exchanger capacity control(only PUHY model)
		Cooling/heating switching
63H1	Pressure switch	High pressure protection for the outdoor unit
63HS1		Discharge pressure
63LS	Pressure sensort	Low pressure
ACCT1,ACCT2	Current sensor(AC)	
C100~C107	Capacitor (inverter main circuit)	
CH11	Crankcase heater (for heating the compressor)	
DCL	DC reactor	
L	Choke coil (for high frequency noise reduction)	
LEV1 *10	Linear expansion valve	HIC bypass,Controls refrigerant flow in HIC circuit
LEV2a,b		Pressure control,Refrigerant flow rate control
LEV2d *9		Pressure control,Refrigerant flow rate control
LEV4		For opening/closing the injection circuit
LEV9 *9,10		Heat exchanger for inverter
MF1,2	Fan motor(for cooling heat exchanger)	
R1,2	Resistor	For inrush current prevention
RS#01,02/03		For current detection
SV1a	Solenoid valve	For opening/closing the bypass circuit under the OLS
SV2		For opening/closing the discharge suction bypass
SV3 *11 SV9 *8		For opening/closing the bypass circuit
SV10 SV11 *8		For continuous heating
TB1	Terminal block	Power supply
TB2		Heater transmission line
TB3		Indoor/Outdoor transmission line
TB7		Central control transmission line
TH2 *8	Thermistor	Subcool bypass outlet temperature
TH3		Pipe temperature
TH4		Discharge pipe temperature
TH5		ACC inlet pipe temperature
TH6 *8		Subcooled liquid refrigerant temperature
TH7		OA temperature
TH15		Compressor shell bottom temperature
THHS		IPM temperature
X101~X103	Magnetic relay(inverter main cicuit)	
Z22,24,25	Function setting connector	

4-4 Transmission Booster Electrical Wiring Diagrams

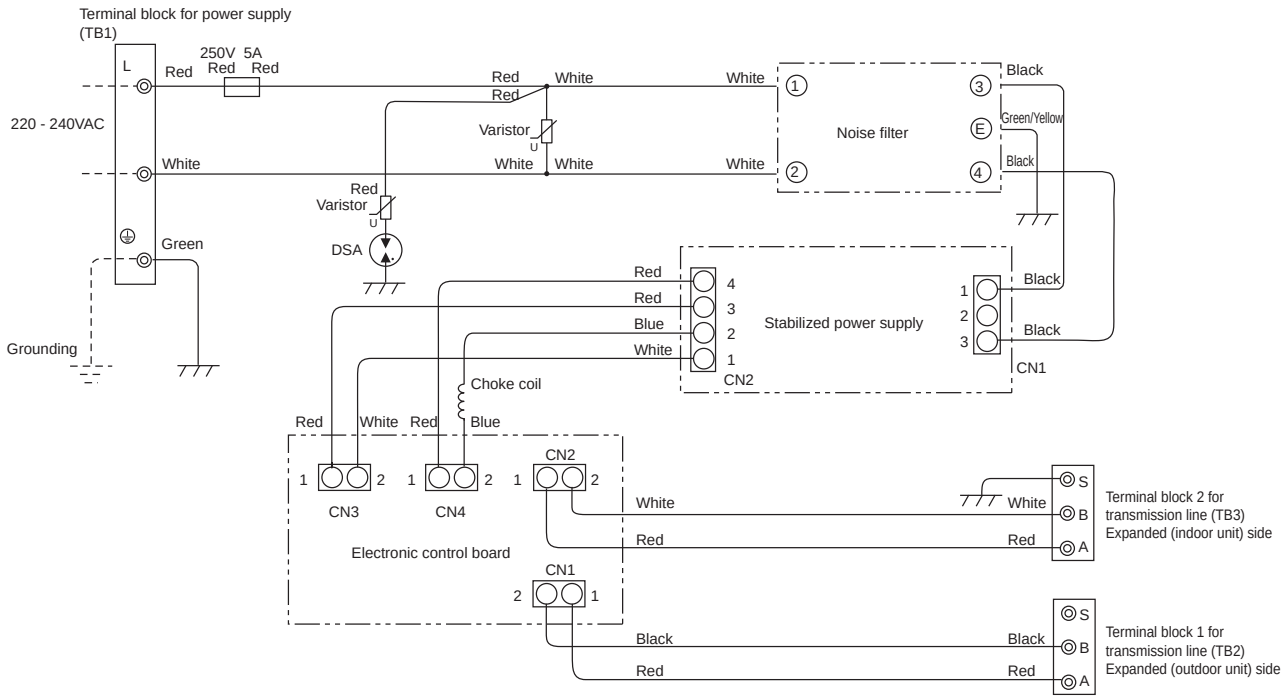

4-5 BC Controller Circuit Board Arrangement

4-5-1 BC Controller Control Box

1. CMB-P1016V-J1/2, JA1/2, KA1/2

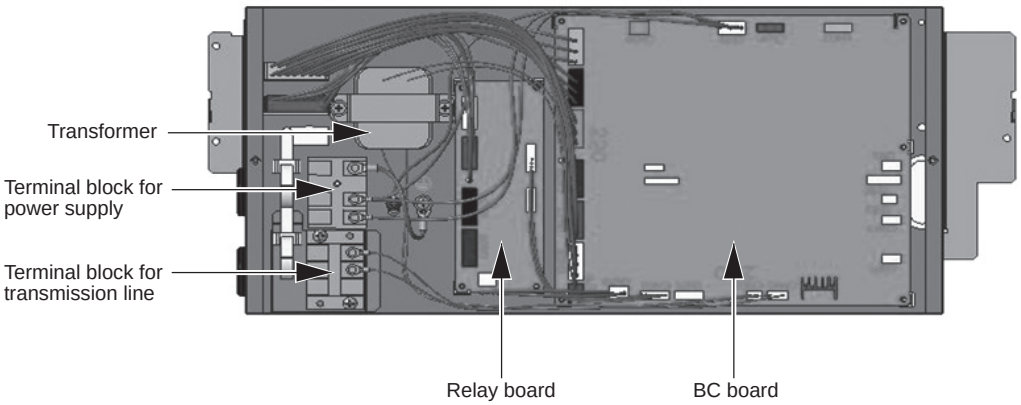

4-6 BC Controller Circuit Board Components

4-6-1 BC Board

Abbreviated name of connector color

Examples
BU：BLUE
BK：BLACK
GN：GREEN
YE：YELLOW
WH：WHITE
RD：RED

Example: (BU) above CN601 indicates that the connector is blue.

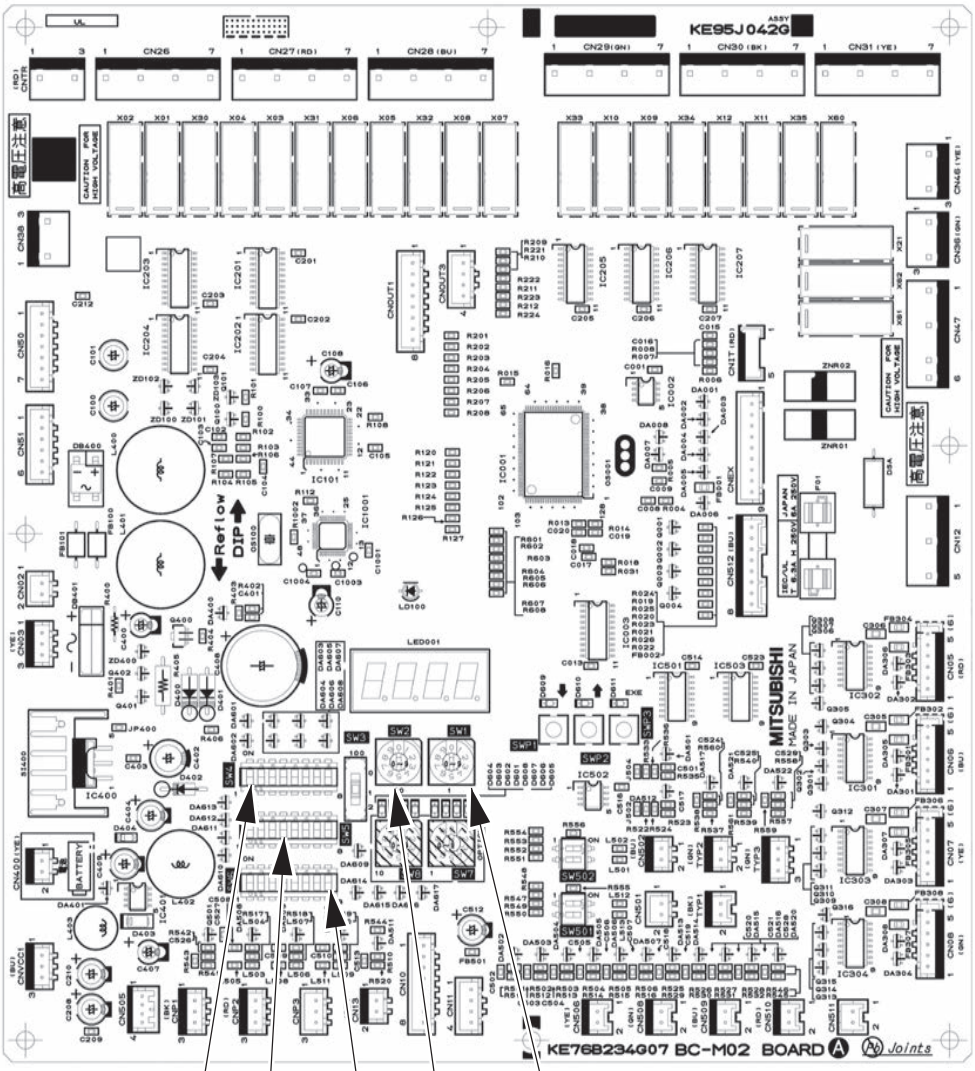

4-6-2 Four-Relay Board

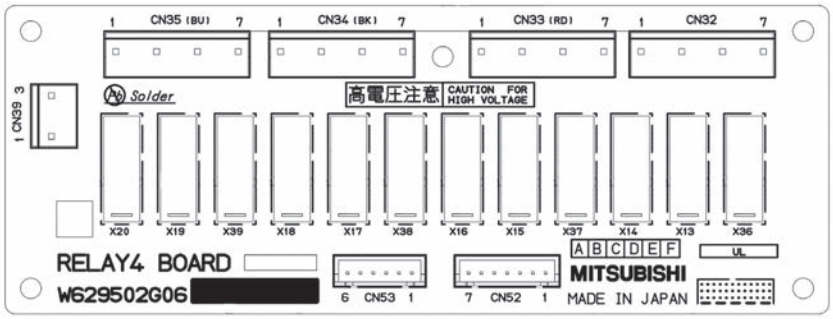

4-6-3 Ten-Relay Board

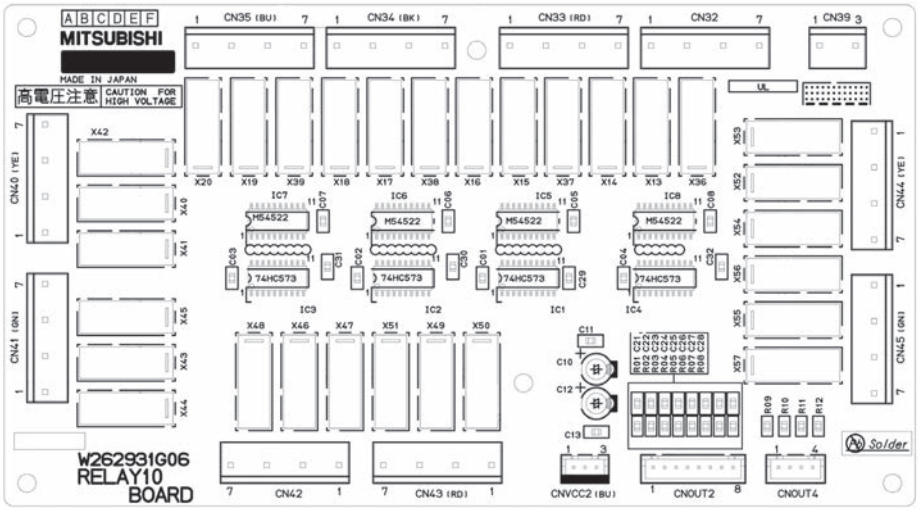

4-7 BC Controller Electrical Wiring Diagrams

(1) CMB-P104NU-J1/2 model

(Symbol explanation)

Symbol	Name
TR	Transformer
TH11,12,15,16	Thermister sensor
LEV1,3	Expansion valve
PS1,3	Pressure sensor
CONT.B	Circuit board / BC controller
TB01	Terminal block (for power source)
TB02	Terminal block (for Transmission)
SV1~4A,B,C	Solenoid valve
T1~4	Terminal
F01	Fuse AC250V 6.3A F
Z1	Function setting connector

Note 1. TB02 is transmission terminal block.
Never connect power line to it.
2. The initial set values of switch on CONT. B are as follows.
SW1:0
SW2:0

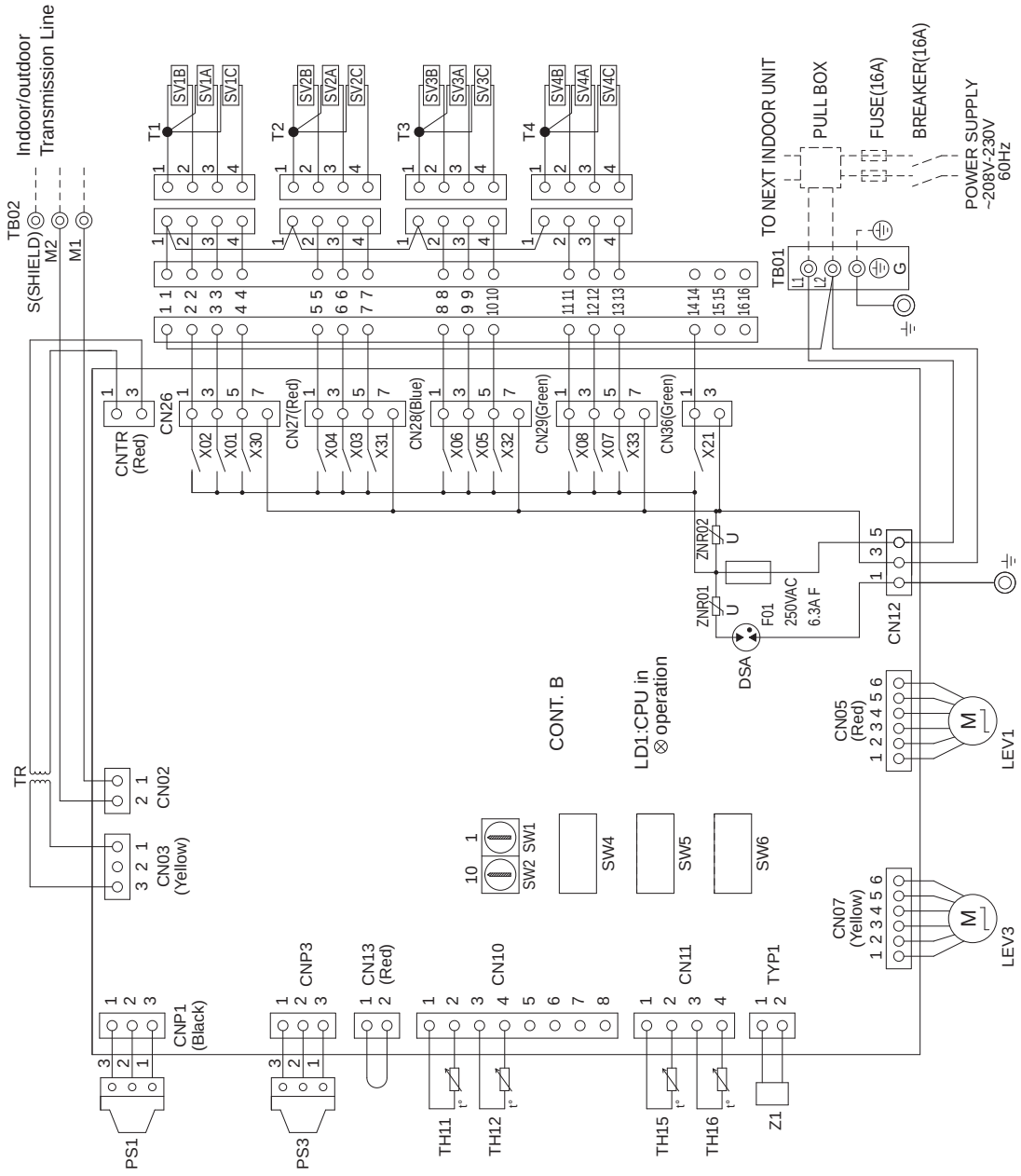

(2) CMB-P106NU-J1/2 model

(Symbol explanation)

Symbol	Name
TR	Transformer
TH11,12,15,16	Thermister sensor
LEV1,3	Expansion valve
PS1,3	Pressure sensor
CONT.B	Circuit board (BC controller)
TB01	Terminal block (for power source)
TB02	Terminal block (for Transmission)
SV1~6A,B,C	Solenoid valve
T1~6	Terminal
F01	Fuse AC250V 6.3A F
Z1	Function setting connector

Note 1. TB02 is transmission terminal block.
Never connect power line to it.
2. The initial set values of switch on CONT. B are as follows.
SW1:0
SW2:0

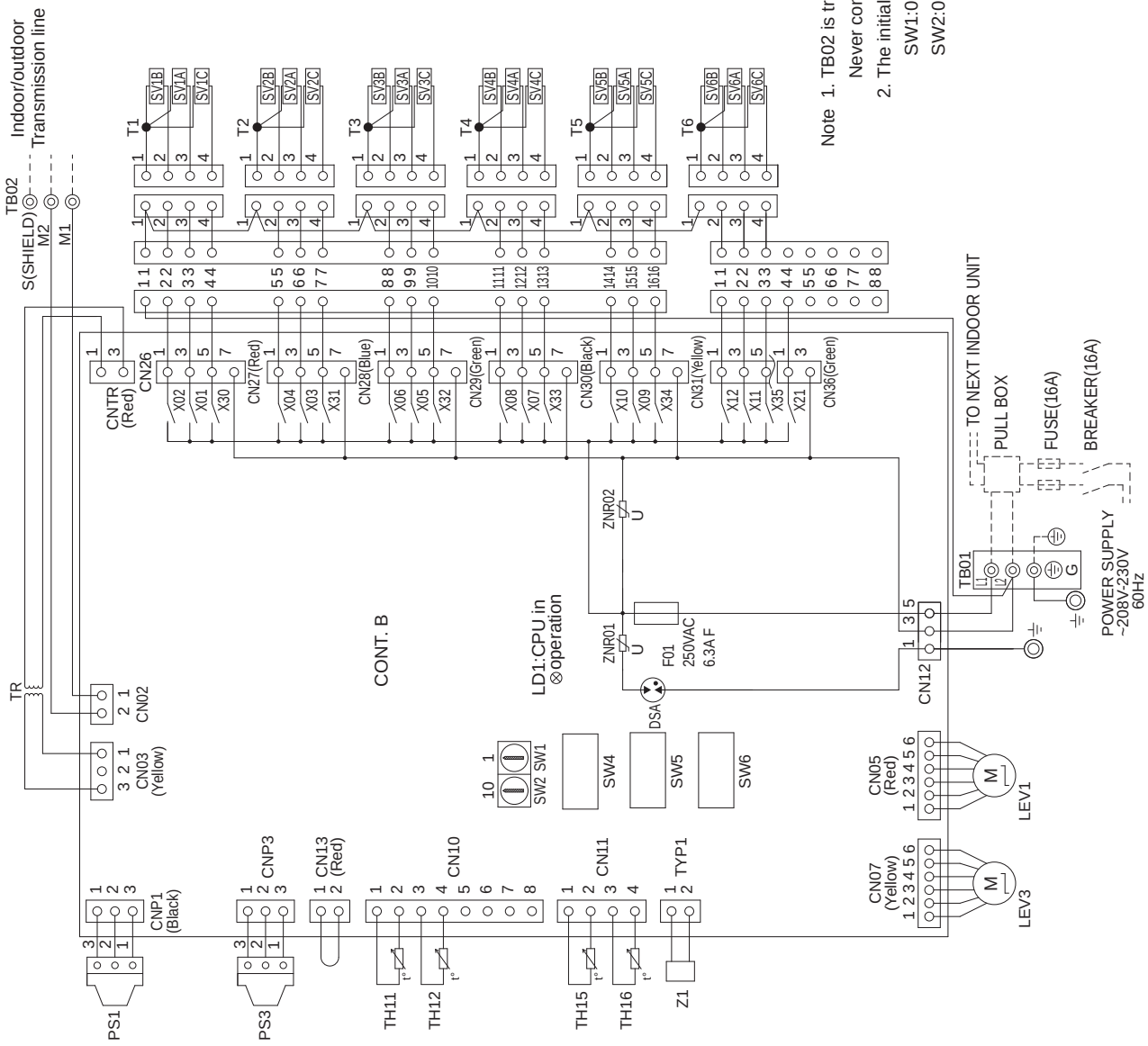

(3) CMB-P108NU-J1/2 model

(Symbol explanation)

Symbol	Name
TR	Transformer
TH11,12,15,16	Thermister sensor
LEV1,3	Expansion valve
PS1,3	Pressure sensor
REL.B	Circuit board Relay
CONT.B	BC controller
TB01	Terminal block (for power source)
TB02	Terminal block (for Transmission)
SV1~8A,B,C	Solenoid valve
T1~8	Terminal
F01	Fuse AC250V 6.3A F
Z1	Function setting connector

Note 1. TB02 is transmission terminal block.
Never connect power line to it.
2. The initial set values of switch on CONT. B are as follows.
SW1:0
SW2:0

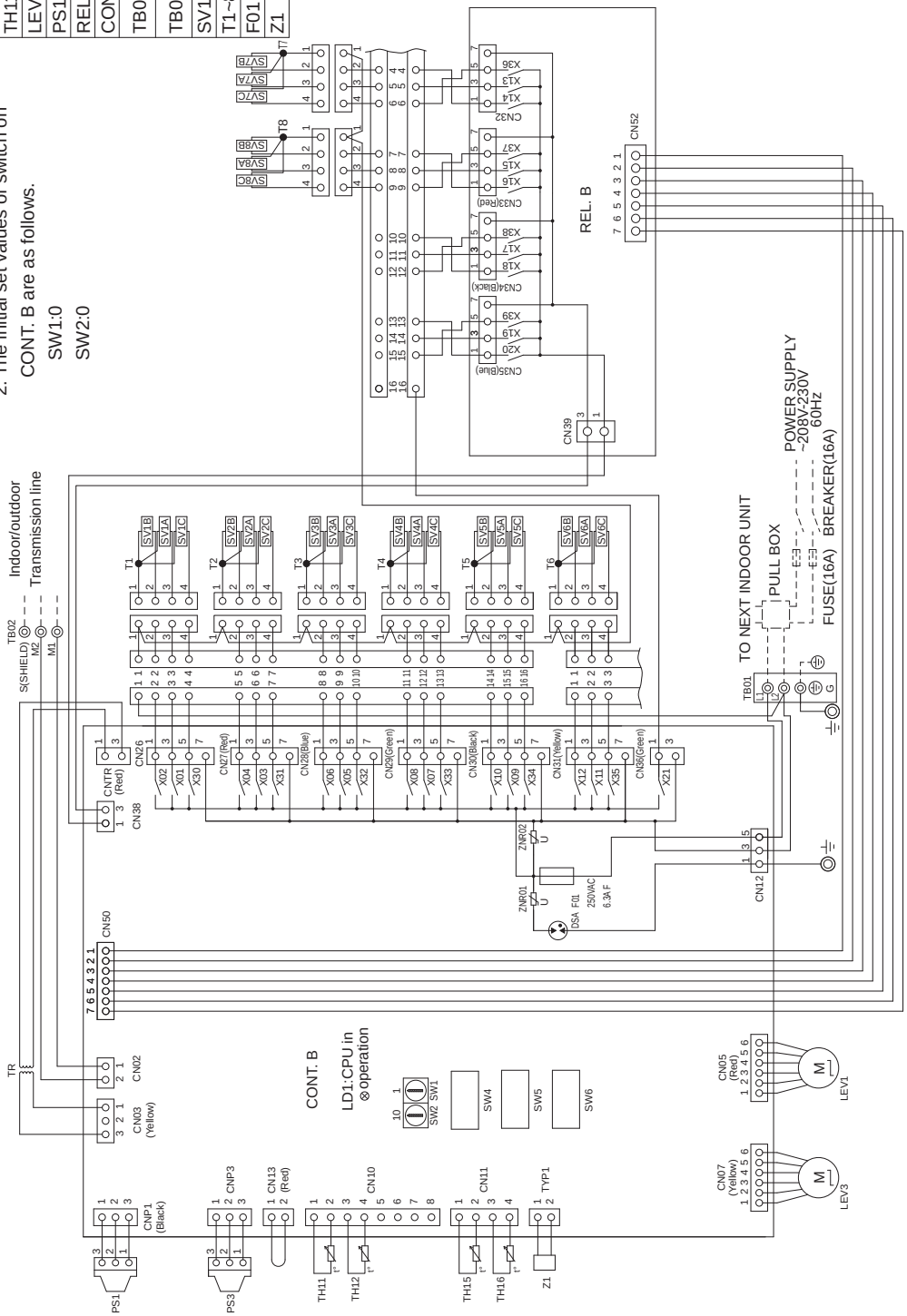

(4) CMB-P1012, P1016NU-J1/2 models

(Symbol explanation)

Symbol	Name
TR	Transformer
TH11,12,15,16	Thermister sensor
LEV1,3	Expansion valve
PS1,3	Pressure sensor
REL. B	Circuit board Relay
CONT.B	BC controller
TB01	Terminal block (for power source)
TB02	Terminal block (for Transmission)
SV1~16A,B,C	Solenoid valve
T1~16	Terminal
F01	Fuse AC250V 6.3A F
Z1	Function setting connector

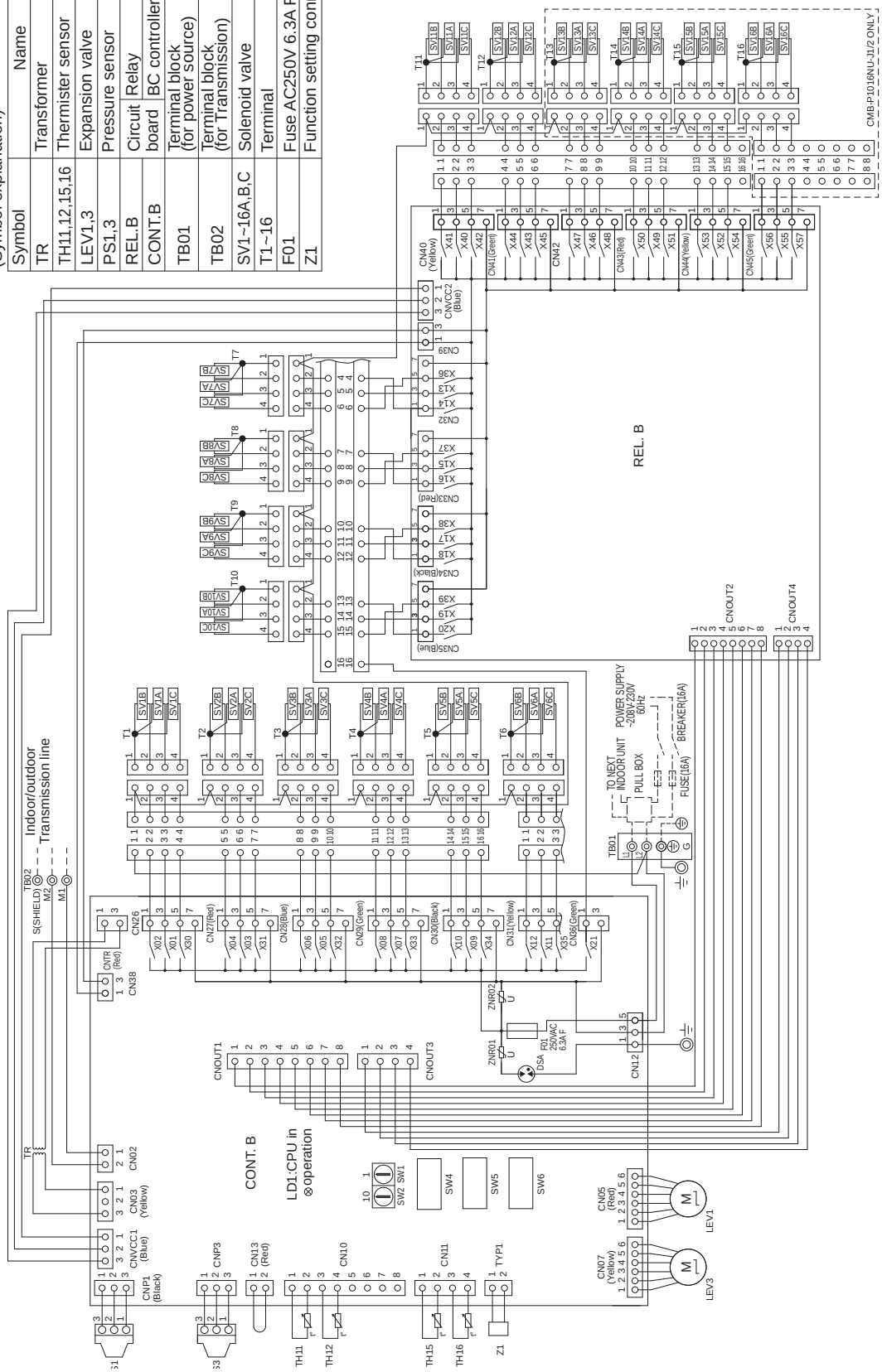

Note 1. TB02 is transmission terminal block.
Never connect power line to it.
2. The initial set values of switch on CONT. B are as follows.
SW1:0
SW2:0

(5) CMB-P108NU-JA1/2 model

(Symbol explanation)

Symbol	Name
TR	Transformer
TH11,12,15,16	Thermister sensor
LEV1,3,4	Expansion valve
PS1,3	Pressure sensor
REL.B	Circuit board: Relay
CONT.B	Circuit board: BC controller
TB01	Terminal block (for power source)
TB02	Terminal block (for Transmission)
SV1~8A,B,C	Solenoid valve
SVM1,SVM1b	Solenoid valve
T1~8	Terminal
F01	Fuse AC250V 6.3A F
Z1	Function setting connector

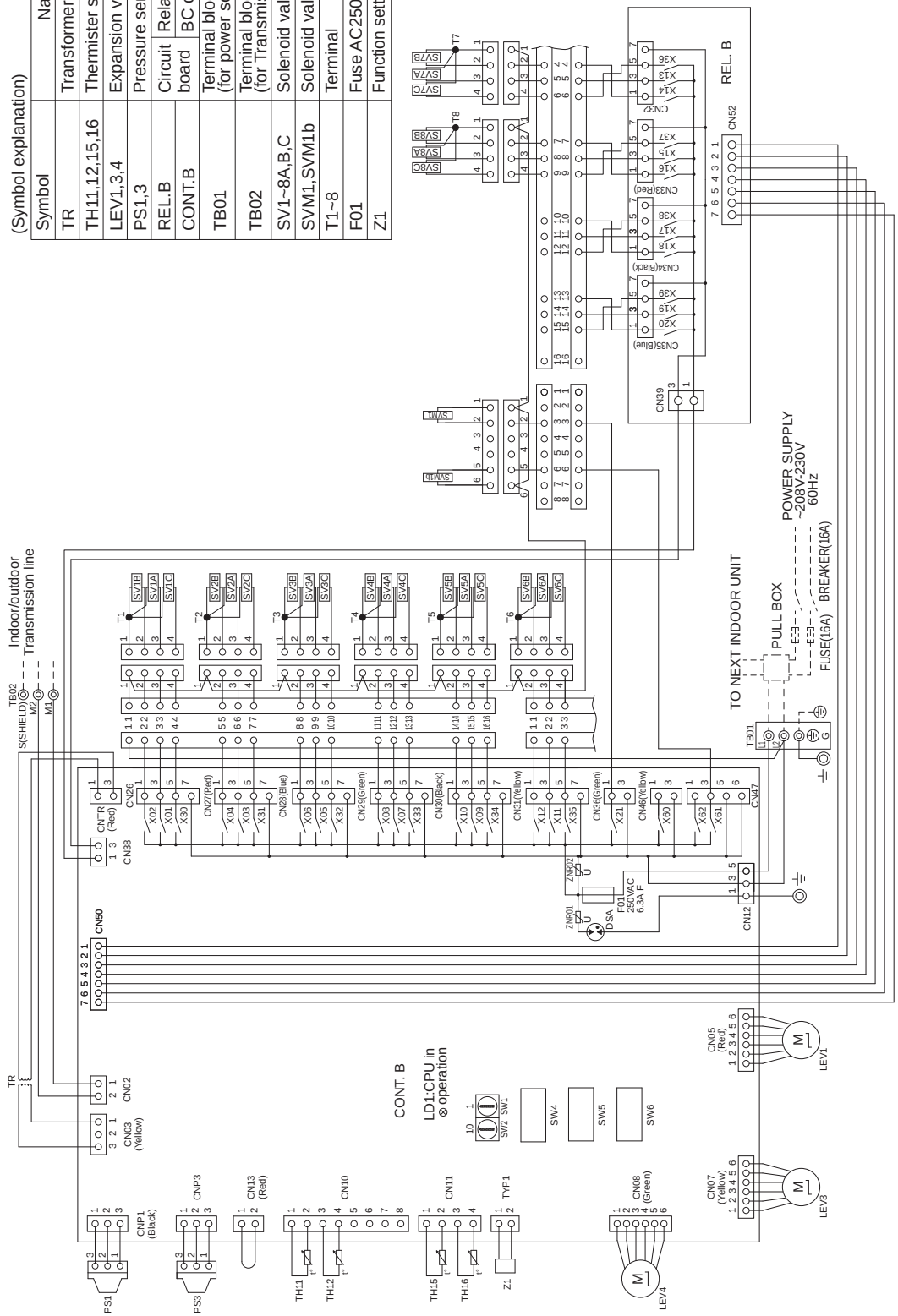

Note 1. TB02 is transmission terminal block.
Never connect power line to it.
2. The initial set values of switch on CONT. B are as follows.
SW1:0
SW2:0

(6) CMB-P1012, P1016NU-JA1/2 models

(Symbol explanation)

Symbol	Name
TR	Transformer
TH11,12,15,16	Thermister sensor
LEV1,3,4	Expansion valve
PS1,3	Pressure sensor
REL.B	Circuit board: Relay
CONT.B	Circuit board: BC controller
TB01	Terminal block (for power source)
TB02	Terminal block (for Transmission)
SV1~16A,B,C	Solenoid valve
SVM1,SVM1b	Solenoid valve
T1~16	Terminal
F01	Fuse AC250V 6.3A F
Z1	Function setting connector

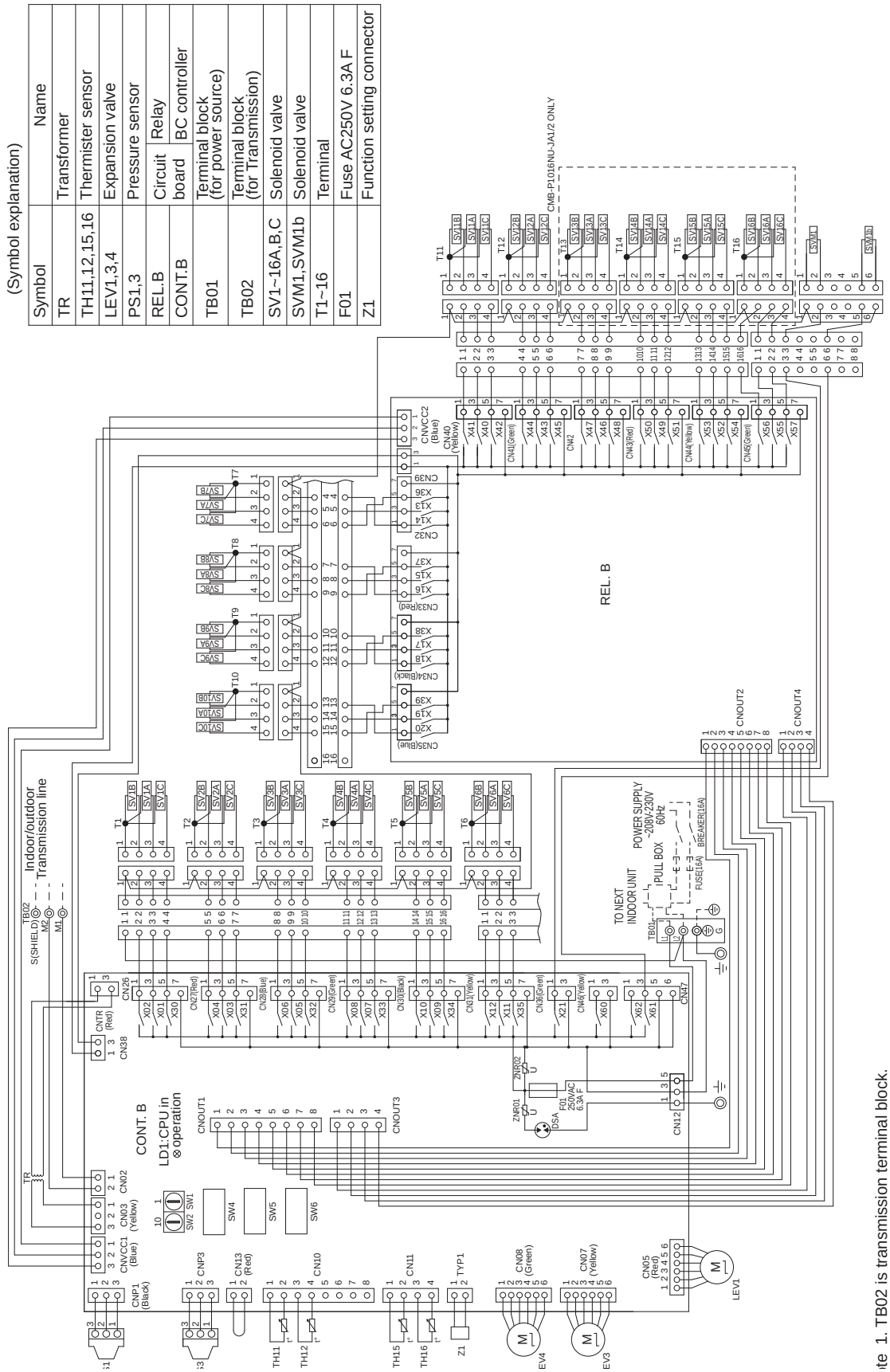

Note 1. TB02 is transmission terminal block.
Never connect power line to it.
2. The initial set values of switch on CONT. B are as follows.
SW1:0
SW2:0

(7) CMB-P1016NU-KA1/2 model

(Symbol explanation)

Symbol	Name
TR	Transformer
TH11,12,15,16	Thermister sensor
LEV1,3,4	Expansion valve
PS1,3	Pressure sensor
REL.B	Circuit board: Relay
CONT.B	Circuit board: BC controller
TB01	Terminal block (for power source)
TB02	Terminal block (for Transmission)
SV1~16A,B,C	Solenoid valve
SVM1,1b	Solenoid valve
T1~16	Terminal
F01	Fuse AC250V 6.3A F
Z1	Function setting connector

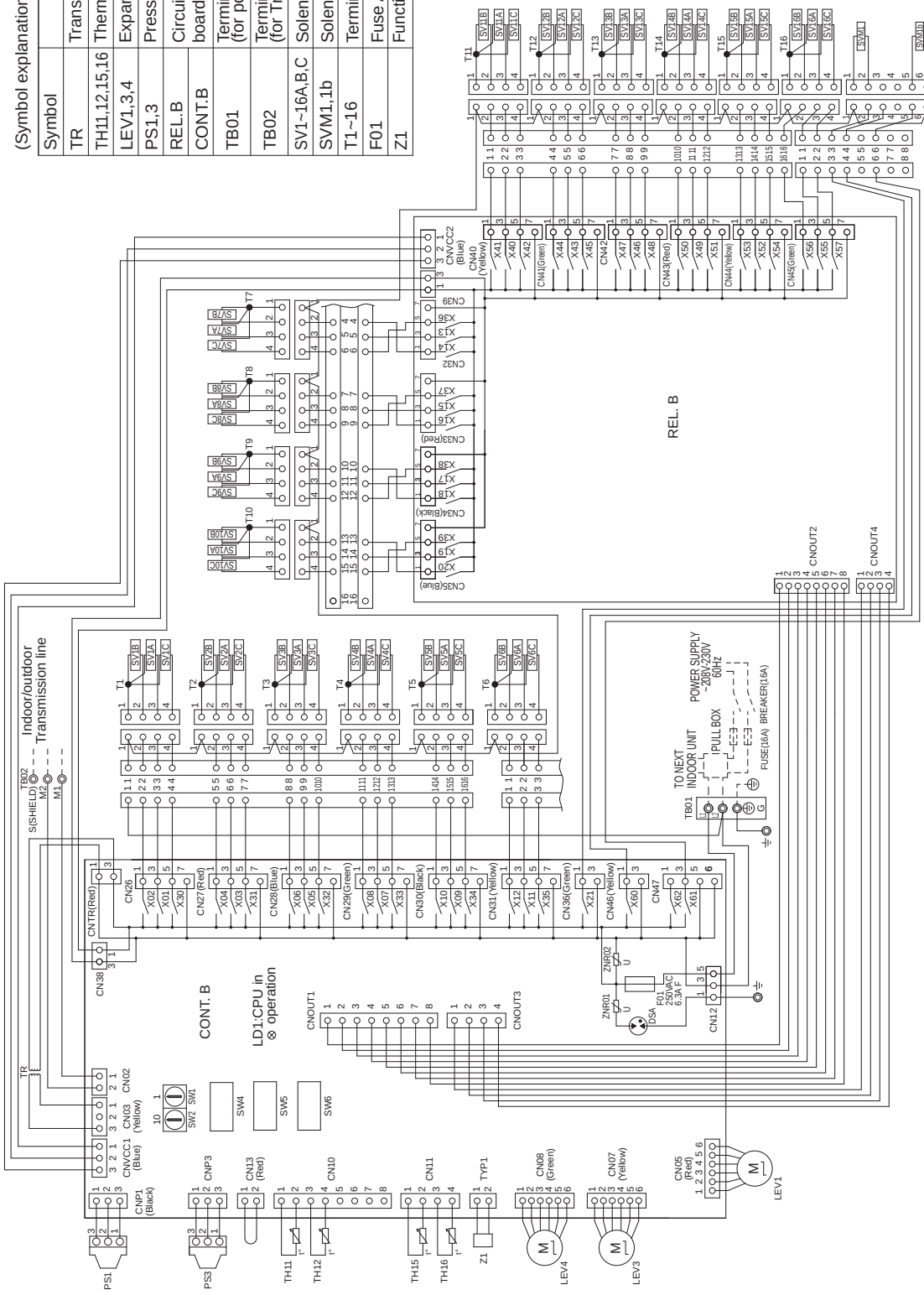

Note 1. TB02 is transmission terminal block.
Never connect power line to it.
2. The initial set values of switch on CONT. B are as follows.
SW1:0
SW2:0

(8) CMB-P104NU-KB1/2 model

(Symbol explanation)

Symbol	Name
TR	Transformer
TH12,15,16	Thermister sensor
LEV3	Expansion valve
CONT.B	Circuit board / BC controller
TB01	Terminal block (for power source)
TB02	Terminal block (for Transmission)
SV1~4A,B,C	Solenoid valve
T1~4	Terminal
F01	Fuse AC250V 6.3A F
Z1	Function setting connector
PS3	Pressure sensor

Note 1. TB02 is transmission terminal block.
Never connect power line to it.
2. The initial set values of switch on CONT. B are as follows.
SW1:0
SW2:0

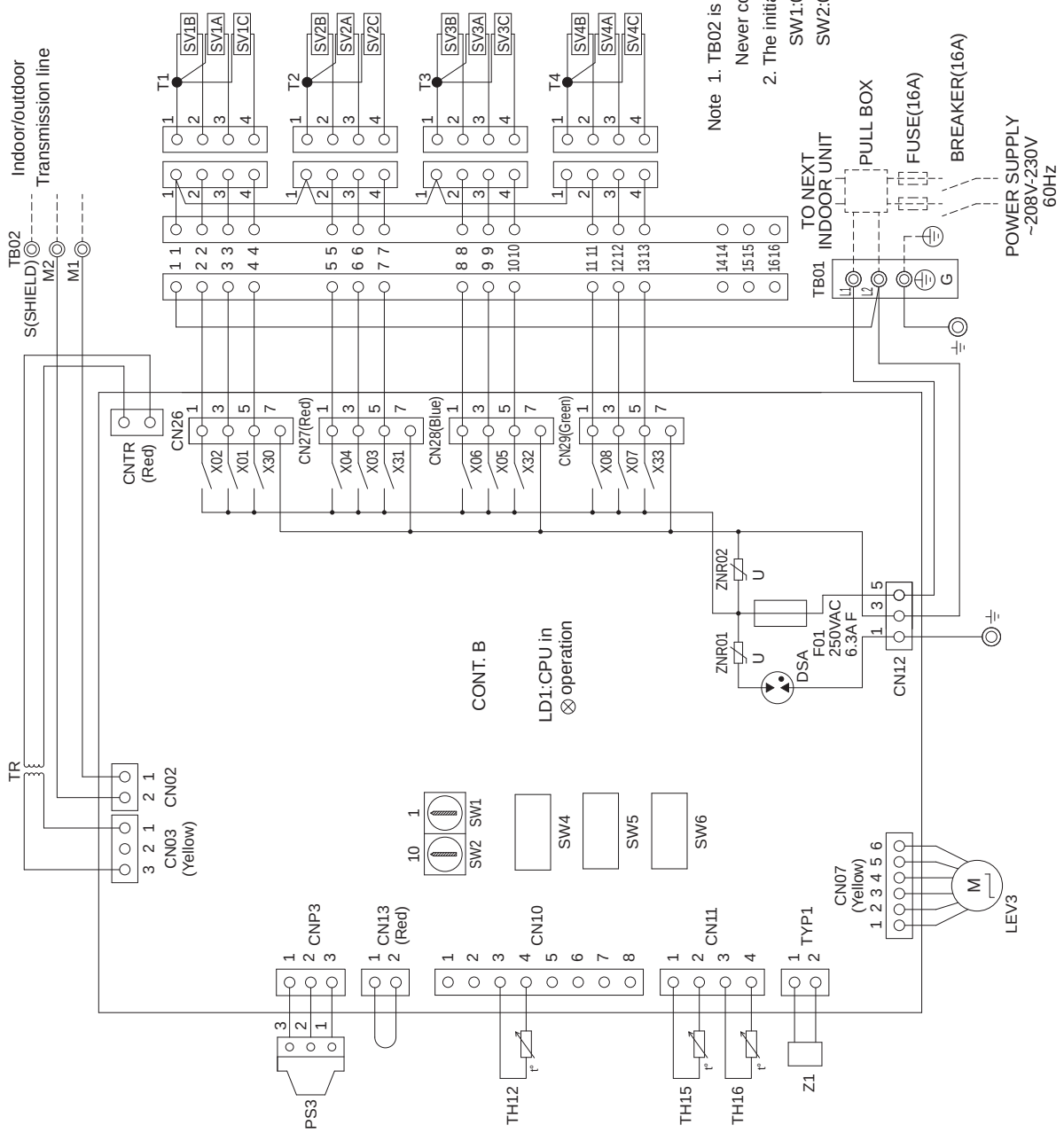

(9) CMB-P108NU-KB1/2 model

(Symbol explanation)

Symbol	Name
TR	Transformer
TH12,15,16	Thermister sensor
LEV3	Expansion valve
PS3	Pressure sensor
REL.B	Circuit board Relay BC controller
CONT.B	
TB01	Terminal block (for power source)
TB02	Terminal block (for Transmission)
SV1~8A,B,C	Solenoid valve
T1~8	Terminal
F01	Fuse AC250V 6.3A F
Z1	Function setting connector

Note 1. TB02 is transmission terminal block.
Never connect power line to it.
2. The initial set values of switch on CONT. B are as follows.
SW1:0
SW2:0

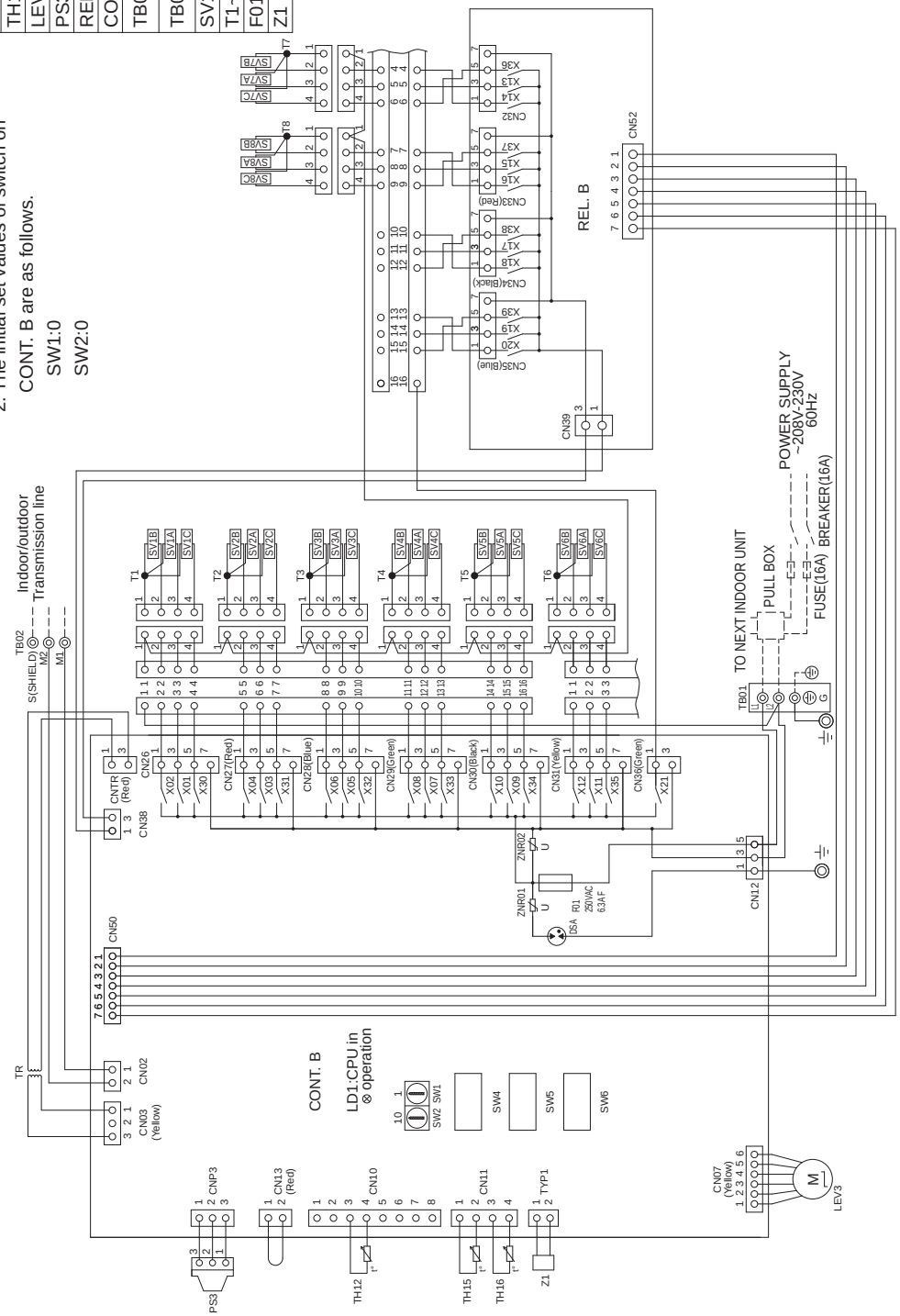

Chapter 5 Control

5-1 Dipswitch Functions and Factory Settings 1
5-1-1 Outdoor Unit Switch Functions and Factory Settings 1
5-1-2 Indoor Unit Switch Functions and Factory Settings 7
5-1-3 Remote Controller Switch Functions and Factory Settings 8
5-1-4 BC Controller Switch Settings 10
5-2 Outdoor Unit Control 11
5-2-1 Overview 11
5-2-2 Rotation Control 11
5-2-3 Initial Control 11
5-2-4 Startup Control 12
5-2-5 Refrigerant Bypass Control 13
5-2-6 Frequency Control 14
5-2-7 Defrost Operation Control 15
5-2-8 Continuous heating mode control 18
5-2-9 Refrigerant Recovery Control 21
5-2-10 Outdoor Unit Fan Control 21
5-2-11 Expansion valve control (LEV2a, LEV2b, LEV2c, and LEV2d) 23
5-2-12 Control of Controller Cooling Function (Electronic Expansion Valve <LEV9>) 23
5-2-13 Injection Control (Linear Expansion Valve <LEV4>) 23
5-2-14 Control at Initial Startup 23
5-2-15 Emergency Operation Mode 25
5-2-16 Operation Mode 27
5-2-17 Demand Control 28
5-2-18 Control of IH energization without the compressor in operation <Type A only> 28
5-3 BC Controller Control 29

5-1 Dipswitch Functions and Factory Settings

5-1-1 Outdoor Unit Switch Functions and Factory Settings

(1) Control board

Switch		Function	Function according to switch setting		Switch setting timing	Units that require switch setting (Note 2)
			OFF	ON		
SWU	1-2	Unit address setting	Set to 00 or 51-100 with the dial switch		Before power on	C
SW5	1	Centralized control switch	Without connection to the centralized controller	With connection to the centralized controller	Before power on	B
	2	Deletion of connection information	Normal control	Deletion	Before power on	A
	3	-	Preset before shipment			-
	4	-				-
	5	-				-
	6	-				-
	7	-				-
	8	-				-
SW6	4	Model setting (outdoor unit/high static pressure setting)	High static pressure (Note 5)		Before power on	C
	5	Model setting (outdoor unit/high static pressure setting)			Before power on	C
	7	Performance-priority/low-noise mode setting	Performance-priority mode (Note 3)	Quiet-priority mode	Anytime after power on	A
	8	Low-noise mode/step demand switching	Low-noise mode (Note 4)	Step demand mode	Before power on	C
	10	Self-diagnosis monitor display / SW4 function setting mode switching	Self-diagnosis monitor display	SW4 function setting mode	Anytime after power on	C

Switch		Function	Function according to switch setting		Switch setting timing	Units that require switch setting (Note 2)
			OFF	ON		
SW7	1	Enables or disables the detection of the following types of inverter compressor errors ACCT, DCCT sensor error(5301 Detail code 115, 116) ACCT, DCCT sensor circuit error(5301 Detail code 117, 118) IPM open-phase/ CNCT2 connection error(5301 Detail code 119) Wiring connection error(5301 Detail code 120)	Error detection enabled	Error detection disabled (no-load operation allowed)	Any time after power on	C
	2	Enables or disables no-load operation of the left fan inverter The unit continues no-load operation for 30 seconds and comes to an error stop. See the relevant pages for details: [8-10-9 Checking the Fan Board for Damage at No Load]	No-load operation disabled	No-load operation enabled	Any time after power on	C
	3	-	-	-	-	-
	4	Enables or disables no-load operation of the right fan inverter The unit continues no-load operation for 30 seconds and comes to an error stop. See the relevant pages for details: [8-10-9 Checking the Fan Board for Damage at No Load]	No-load operation disabled	No-load operation enabled	Any time after power on	C
	5	-	-	-	-	-
	6	-	-	-	-	-
	7	-	-	-	-	-
	8	-	-	-	-	-
	9	Switches between the normal startup mode and the USB writer rewrite mode	Normal startup mode	USB writer rewrite mode	Before power on	C

Note

1) Unless otherwise specified, leave the switch to OFF where indicated by "-" or where the cells are blank, which may be set to OFF for a reason.
2) A: Only the switch on OC needs to be set for the setting to be effective.
   B: The switches on both the OC and OS need to be set to the same setting for the setting to be effective.
   C: The switches on both the OC and OS need to be set.
3) When set to the performance-priority mode, the low-noise mode will be terminated, and the units will operate in the normal mode.
   Cooling: Ambient temperature or the high pressure is high.
   Heating: When the outside air temperature is low or when the low pressure is low. Refer to the following page(s). [2-4-7 Various Control Methods Using the Signal Input/Output Connector on Outdoor Unit]
4) Operation noise is reduced by controlling the compressor frequencies and the rotation speed of the outdoor unit fans.
   CN3D needs to be set. Refer to the following page(s). [2-4-7 Various Control Methods Using the Signal Input/Output Connector on Outdoor Unit]
5) Selectable with the function switches SW6-4 and SW6-5.

		SW6-5	
		ON	OFF
SW6-4	ON	80 Pa	60 Pa
	OFF	30 Pa	0 Pa

6) Keep SW7-1, -2, and -4 set to OFF during normal operation. Leaving these switches to ON will disable the error-detection function and can lead to equipment damage.
7) Shaded areas ( ) indicate factory settings.

Switch			Function		Function according to switch setting		Switch setting timing	Units that require switch setting (Note 2)
					OFF (LED3 Unlit)	ON (LED3 Lit)		
SW4 SW6-10: OFF	1-10 1:ON, 0:OFF		Self-diagnosis/operation monitor		Refer to the following page(s). [10 LED Status Indicators on the Outdoor Unit Circuit Board]		Anytime after power on	C
SW4 1-10 [0:OFF, 1:ON] (Note 1) SW6-10:ON	No.769	1000000011	Test run mode: ON/OFF		Stops all ICs	Sends a test-run signal to all IC	Anytime after power on	A
	No.817	1000110011	Starts up drive recorder		Enabled	Disabled	Anytime after power on	A
	No.818	0100110011	Data collection during an error		Disabled	Enabled	Anytime after power on	A
	No.832	0000001011	Cumulative compressor operation time deletion		Retained	Cleared	Anytime after power on (OFF→ON)	C
	No.848	0000101011	Continuous heating cycle function		Disabled	Enabled	After being energized and while the compressor is stopped	A
	No.852	0010101011	Shifts evaporating temp. depending on the load.		Depends on the setting combination with No. 853 (Note 5) (Factory setting: OFF)		Anytime after power on	A
	No.853	1010101011	Shifts evaporating temp. depending on the load.		Depends on the setting combination with No. 852 (Note 5) (Factory setting: OFF)		Anytime after power on	A
	No.885	1010111011	Fan speed setting at low-outside temperature heating		Depends on the setting combination with No.885 (Note 11) (Factory setting: OFF)		After being energized and while the compressor is stopped	B
	No.886	0110111011	Fan speed setting at low-outside temperature heating		Depends on the setting combination with No.886 (Note 11) (Factory setting: ON)		After being energized and while the compressor is stopped	B
	No.891	1110010111	Smooth auto-shift start up mode		Disabled	Enabled	After being energized and while the compressor is stopped	A
	No.896	0000000111	Clearance of error history SW	OC	Retained (IC/OC)	Deleted (IC/OC)	Anytime after power on (OFF→ON)	C
				OS	Retained (OS)	Deleted (OS)		
	No.897	1000000111	High sensible heat operation setting		Depends on the combined setting with No. 900 (Note 8)		Anytime after power on	A
	No.900	0010000111	High sensible heat operation setting		Depends on the combined setting with No. 897 (Note 8)		Anytime after power on	A
	No.912	0000100111	Pump down function		Normal control	Pump down operation	After being energized and while the compressor is stopped	A
	No.913	1000100111	Forced defrost (Note 3)		Normal control	Forced defrost starts	10 minutes after the completion of defrost operation (OFF→ON) or 10 minutes after compressor start-up (OFF→ON)	D
	No.915	1100100111	Defrost start temperature (Note 3)		(E)P72, 144, 168: -8°C [18°F] (E)P96, 120: -10°C [14°F]	-5°C [23°F]	Anytime after power on	B
	No.916	0010100111	Defrost end temperature (Note 3)		7°C [45°F]	12°C [54°F]	Anytime after power on	B
	No.918	0110100111	Changes the defrost timer setting (Note 3)		50 minutes	90 minutes	Anytime after power on (OFF→ON)	B
	No.921	1001100111	Temperature/pressure unit selection		°C/kgf/cm^2	°F/psi	Anytime after power on	C
	No.922	0101100111	Refrigerant amount adjustment		Normal control	Refrigerant amount adjust mode	Anytime after power on (except during initial startup/becomes ineffective 90 minutes after compressor started up.)	A
	No.932	0010010111	Heating backup		Disabled	Enabled	Anytime after power on	A
	No.933	1010010111	Snow sensor setting		Effective only when TH7 ≤ 5 is true or the snow sensor contact input is on.	Effective when TH7 ≤ 5 is true	Anytime after power on	C
	No.934	0110010111	Snow sensor setting		Continuous fan operation (FAN=50%)	Intermittent fan operation (100% for 5 minutes ↔ 0% for 30 minutes)	Anytime after power on	C
	No.935	1110010111	High heating power (at low outside temperature)		Effective: Earlier than Ver. 26.47 Ineffective: Ver. 26.47 or later	Ineffective: Earlier than Ver. 26.47 Effective: Ver. 26.47 or later	Anytime after power on	A
	No.958	0111110111	Clear the history of completing initial control		Retained	Cleared	After being energized and while the compressor is stopped * Effective only OFF to ON	C
	No.974	0111001111	Panel heater (Optional parts) output		Disabled	Enabled	After being energized and while the compressor is stopped	C
	No.982	0110101111	Target evaporation temperature setting		Refer to Note 4).		Anytime after power on	A
	No.997	0011001111	Multiple-stage low-noise setting		Disabled		After being energized and while the compressor is stopped	A
	No.1006	0111011111					After being energized and while the compressor is stopped	A

Note

1) To change the settings, set SW6-10 to ON, set SW4, and press and hold SWP3 for 2 seconds or longer (OFF↔ON).
LED3 will light up when the switch setting is ON, and lights off when OFF.
Use the LED3 display to confirm that the settings are properly made.
The settings will need to be set again when the control board is replaced. Write down the settings on the electrical wiring drawing label.
2) A: OC: Only the switch on OC needs to be set for the setting to be effective.
B: OC: The switches on both the OC and OS need to be set to the same setting for the setting to be effective.
C: OC: The switches on both the OC and OS need to be set.
D: OC: The switch on either the OC or OS needs to be set.
3) For details, refer to the following page(s).[5-2-7 Defrost Operation Control]
4) The table below shows how the target evaporation temperature is set with SW4 (982).

SW4(982)	OFF → ON → OFF → ON → OFF → ON
Target evaporating temperature	0℃ [32℉] → -2℃ [28℉] → 0℃ [32℉] → -4℃ [25℉] → 0℃ [32℉] → -6℃ [21℉]

*SW4 (982) setting will not automatically be restored after the control board is replaced. (The function of SW4 is explained in Note 7.) When using the function of SW4, write down the SW4 (982) setting on the control board panel, and manually reset the setting after the control board is replaced.
5) The table below shows the combination of the settings for items No.852 and No.853 and the target evaporating temperature (target ET) setting that corresponds to each combination when energy-saving mode is activated. Refer to the following page(s). [2-4-7 Various Control Methods Using the Signal Input/Output Connector on Outdoor Unit]

Switch No.852	OFF	ON	OFF	ON
Switch No.853	OFF	OFF	ON	ON
Target ET max	9°C [48°F]	11°C [52°F]	14°C [57°F]	17°C [63°F]
Target ET min	0°C [32°F]	3°C [37°F]	5°C [41°F]	6°C [43°F]

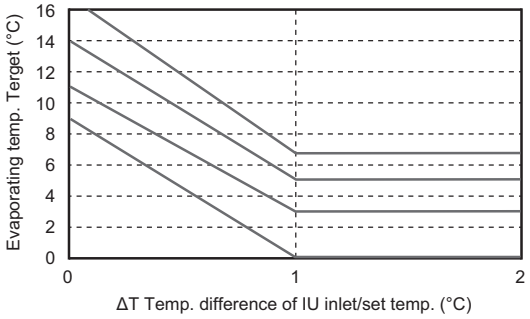

6) Unless otherwise specified, leave the switch to OFF where indicated by "-" or where the cells are blank, which may be set to OFF for a reason.
7) The settings that are configured with SW4 (SW6-10: ON) will automatically be stored on the indoor units that support the new function*. The stored settings will automatically be restored when the outdoor unit control board is replaced.
Not applicable to SW4 (982).
If none of the connected indoor units supports the new function, no configuration information will be saved. If this is the case, manually record the settings configuration on the control box panel.
*The new function is supported on most units that are manufactured in December of 2012 and later. Depending on the model, this function may be added on later date. Ask your dealer for further details.
8) The table below shows the combinations of the settings for items No. 897 and No. 900 and the target evaporating temperature setting that corresponds to each combination.

Switch		No.900	
		OFF	ON
No.897	OFF	0°C [32°F]	9°C [48°F]
	ON	6°C [43°F]	14°C [57°F]

9) Shaded areas ( ) indicate factory settings.

10) The table below shows the combinations of the settings for items No. 885 and No. 886 and the ratio of outdoor unit fan speed at low outside temperature heating setting that corresponds to each combination.

Switch		No.886	
		OFF	ON
No.885	OFF	Max	Middle
	ON	High	Low

(2) Fan board

Switch		Function	Function according to switch setting		Switch setting timing
			OFF	ON	
SW1	1	Enabling/Disabling no-load operation No-load operation will continue for approximately 30 seconds, and then the unit will come to an abnormal stop. For details, refer to the following page(s). [8-10-9 Checking the Fan Board for Damage at No Load]	No-load operation disabled	No-load operation enabled	Anytime after power on
	2	-	-	-	-
	3	Address setting. See the notes below.	0	5	Before power on
	4	Address setting. See the notes below.	0	6	Before power on

Note

- Only the addresses are preset before shipment (All other switches are set to OFF.) Unless otherwise specified, leave the switch to OFF where indicated by "-," which may be set to OFF for a reason.
- To set the address of the models equipped with a single fan, set only SW1-3 to ON (= address 5). For the models equipped with two fans, set SW1-3 to ON (= address 5) on the fan board on the right when seen from the front of the control box, and set SW1-4 to ON (= address 6) on the fan board on the left.
- Leave SW1-1 to OFF during normal operation. Setting this switch to ON will disable the error detection function and may result in equipment damage.

5-1-2 Indoor Unit Switch Functions and Factory Settings

(1) Dipswitches

1) SW1,3

Switch		Function	Function according to switch setting		Switch setting timing	Notes
			OFF	ON		
SW1	1	Room temperature detection position	Indoor unit inlet	Built-in sensor on the remote controller	While the unit is stopped (Remote controller OFF)	Set to ON (built-in sensor on the remote controller) on All Fresh (PEFY-NMHU-E-DA, CFM(R)-E) model units
	2	Clogged filter detection	Not available	Available		
	3	Filter check reminder time setting	100h	2500h		
	4	Outside air intake	Disabled	Enabled		Always set to OFF on PKFY-NBMU model units
	5	Remote display option	Fan output	Thermo-ON signal		
	6	Humidifier control	During heating operation	Always on while in the heating mode		
	7	Fan speed setting for Heating Thermo-OFF	Very Low	Low		
		Forced heating operation at OA temp of 5°C or below	Not available	Available		Applicable to All Fresh model units (PEFY-NMHU-E-DA, CFM(R)-E) only
	8	Fan speed setting for Heating Thermo-OFF	According to the SW1-7 setting	Preset speed		
		-	-	-		Applicable to All Fresh model units (PEFY-NMHU-E-DA, CFM(R)-E) only
	9	Self-recovery after power failure	Disabled	Enabled		
	10	Power source start-stop	Disabled	Enabled		
SW3	1	Unit model selection	Heat pump	Cooling only		
	2	Louver	Not available	Available		
	3	Vane	Not available	Available		
	4	Vane swing function	Not available	Available		Always set to OFF on PKFY-NBMU model units
	5	-	-	-		
	6	Vane angle limit setting for cooling operation	Downblow B,C	Horizontal		Always set to Downblow B or C on PKFY-NBMU model units
	7	Automatic LEV value conversion function	Not available	Available		
	8	Heating 4°C [7.2°F] up	Enabled	Disabled		Set to OFF on floor-standing (PFFY) type units
	9	SHm setting	2°C [3.6°F]	5°C [9°F]		The setting depends on the model and type.
	10	SCm setting	10°C [18°F]	15°C [27°F]		The setting depends on the model and type.

Note 1. Settings in the shaded areas are factory settings.(Refer to the table below for the factory setting of the switches whose factory settings are not indicated by the shaded cells.)
Note 2. If both SW1-7 and SW1-8 are set to ON, the fan remains stopped during heating Thermo-OFF.
To prevent incorrect temperature detection due to a build-up of warm air around the indoor unit, use the built-in temperature sensor on the remote controller (SW1-1) instead of the one on the indoor unit inlet thermistor.
Note 3. By setting SW3-1, SW1-7, and SW1-8 to a certain configuration, the fan can be set to remain stopped during cooling Thermo-OFF. See the table below for details.

Switch setting			Fan speed during Thermo-OFF		Cooling-only/heat pump
SW3-1	SW1-7	SW1-8	Heating	Cooling	
OFF	OFF	OFF	Very Low	Preset speed	Heat pump
	ON		Low		
	OFF	ON	Preset speed		
	ON		Stop		
ON	OFF	OFF	-	Preset speed	Cooling-only
	ON		-		
	OFF	ON	-	Stop	
	ON		Stop	Stop	Heat pump

Note 4. Switch settings vary with indoor units models. Refer to the Service Handbook for indoor units for details.

Note

The setting timing for SW2 is before power is turned on.
Switch settings vary with different types of indoor units. Refer to the service handbooks of relevant indoor units for details.

(2) Address switch

Actual indoor unit address setting varies in different systems. Refer to the installation manual for the outdoor unit for details on how to make the address setting.
Each address is set with a combination of the settings for the 10's digit and 1's digit.
(Example)
When setting the address to "3", set the 1's digit to 3, and the 10's digit to 0.
When setting the address to "25", set the 1's digit to 5, and the 10's digit to 2.

5-1-3 Remote Controller Switch Functions and Factory Settings

(1) MA simple remote controller (PAC-YT52CRA)

There are switches on the back of the top case. Remote controller Main/Sub and other function settings are performed using these switches. Ordinarily, only change the Main/Sub setting of SW1. (The factory settings are ON for SW1, 2, and 3 and OFF for SW4.)

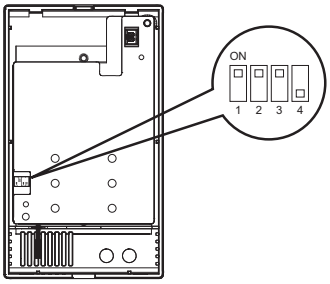

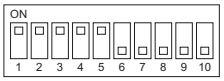

The figure at left shows that the switches 1 through 5 are set to ON and 6 through 10 are set to OFF.

SW No.	SW contents Main	ON	OFF	Comment	Switch setting timing
1	Remote controller Main/Sub setting	Main	Sub	Set one of the two remote controllers at one group to “ON”.	Before power on
2	Temperature display units setting	Celsius	Fahrenheit	When the temperature is displayed in [Fahrenheit], set to “OFF”.	Before power on
3	Cooling/heating display in AUTO mode	Yes	No	When you do not want to display “Cooling” and “Heating” in the AUTO mode, set to “OFF”.	Before power on
4	Indoor temperature display	Yes	No	When you want to display the indoor temperature, set to “ON”.	Before power on

Note

The MA remote controllers (PAR-CT01MA series, PAR-FS01MA series, PAR-4"x"MA series, or PAR-3"x"MA series ("x" represents 0 or later)) do not have the switches listed above. Refer to the installation manual for the function setting.

(2) ME remote controller (PAR-U01MEDU)

Set the address of the remote controller with the rotary switch.

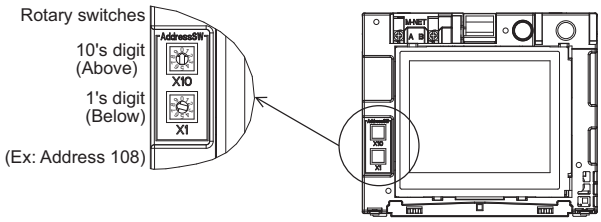

	Address range	Address setting method
Main remote controller	101 to 150	Address that equals the lowest address of the group plus 100
Sub remote controller	151 to 200	Address that equals the lowest address of the group plus 150

Rotary switch setting	Address
01 to 99	101-199 with the 100's digit automatically set to 1
00	200

* The factory setting for the rotary switches is 01.
** M-NET address can be changed with or without the power being applied to the controller.
The screen will jump to the [Start-up] screen.
Group information for indoor units and AHC units will be deleted, but the rest of the information will be retained.

Note

To set the address, turn the rotary switch with a precision slotted screwdriver [(-), 2.0 mm (1/16 in) (W)] to a torque of less than 19.6 N to avoid the damage to the rotary switches.

5-1-4 BC Controller Switch Settings

Switch		Function	Function according to switch setting		Switch setting timing
			OFF	ON	
SW4	1	Model setting	R410A	-	Always leave this switch to OFF.
	2 - 5	-	-	-	-
	6	No. of ports	1	2	Before being energized
	7, 8	-	-	-	-
SW5	1 - 6	-	-	-	-
	7	Model setting	Refer to the table below.		Before being energized
	8	Model setting	Refer to the table below.		Before being energized

Model setting

		SW5-8	
		OFF	ON
SW5-7	OFF	J type	
	ON	JA (KA) type	KB type

5-2 Outdoor Unit Control

5-2-1 Overview

- The outdoor units are designated as OC and OS in the order of capacity from large to small (if two or more units have the same capacity, in the order of address from small to large).
- The setting of outdoor unit can be verified by using the self-diagnosis switch (SW4).

SW4 (SW6-10:OFF)	Display
	♦The unit is designated as the OC: "OC" appears on the display. ♦The unit is designated as the OS: "OS" appears on the display.

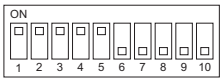

The figure at left shows that the switches 1 through 5 are set to ON and 6 through 10 are set to OFF.

- The OC determines the operation mode and the control mode, and it also communicates with the indoor units.
- The OS exercises autonomous distributed control (over defrost, error detection, and actuator control etc.) according to the operation/control mode signals that are sent from the OC.

5-2-2 Rotation Control

- At the initial startup, outdoor units start up in the order of "OC and OS." When the cumulative operation time of the OC reaches two hours, the OS will start up before the OC at the next start up.
- Startup sequence rotation is performed while all the indoor units are stopped. (Even after two hours of operation, startup sequence rotation is not performed while the compressor is in operation.)
  In a system with multiple outdoor units (OC and OS), when the integrated operation time of the unit in operation (either OC or OS) reaches one hour during a cooling operation at low outside temperature, that unit will stop and the other unit will go into operation.
- Two-outdoor-unit combination models will start rotation control when either of the outdoor units operates for four hours in total.
- For information about rotation control at initial startup, refer to the following page(s). [5-2-14 Control at Initial Startup]
- Performing startup sequence rotation does not change the basic operation of OC and OS. Only startup sequence is changed.
- Startup sequence of the outdoor units can be checked with the self-diagnosis switch (SW4) on the OC.

SW4 (SW6-10:OFF)	Display
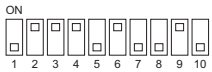	♦OC→OS: "OC" and the "OC" address appear alternately on the display. ♦OS→OC: "OS" and the "OS" address appear alternately on the display.

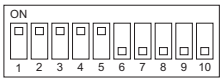

The figure at left shows that the switches 1 through 5 are set to ON and 6 through 10 are set to OFF.

5-2-3 Initial Control

- When the power is turned on, the initial processing of the microcomputer is given top priority.
- During the initial processing, control processing of the operation signal is suspended. (The control processing is resumed after the initial processing is completed. Initial processing involves data processing in the microcomputer and initial setting of each of the LEV opening. This process will take up to 5 minutes.)
- During the initial processing, the LED monitor on the outdoor unit's control board displays S/W version → refrigerant type → Model and capacity → and communication address in turn every second.

5-2-4 Startup Control

- The upper limit of frequency during the first 3 minutes of the operation is 50 Hz.
- When the power is turned on, normal operation will start after the initial start-up mode (to be described later) has been completed (with a restriction on the frequency).
- In the Heating-Only or Heating-Main operation, the unit will not start when TH7 > 25°C. In the test run mode, the unit will start when TH7 > 25°C.
- If the liquid refrigerant level in the accumulator before start is at the middle level or higher, the maximum compressor frequency for the first 6 minutes is 60 Hz. ((E)P168 models only)

5-2-5 Refrigerant Bypass Control

Bypass solenoid valves, which bypass the high- and low- pressure sides, perform the following functions.

(1) Bypass solenoid valve (SV1a) (ON [energized] = Open)

Operation	SV1a	
	ON	OFF
When starting-up the compressor of each outdoor unit	ON for 4 minutes.	
After the restoration of thermo or 3 minutes after restart	ON for 4 minutes.	
During cooling or heating operation with the compressor stopped	Always ON. Exception: OFF when 63HS1-63LS is 0.2MPa[29psi] or less	
After the operation has stopped	ON for 3 minutes. Exception: OFF when 63HS1-63LS is 0.2MPa[29psi] or less	
During defrost operation	ON	
While the compressor is operating at the minimum frequency and when the low pressure (63LS) drops (3 or more minutes after compressor startup)	When the low pressure (63LS) drops below 0.23 Mpa [33 psi] during cooling-only or cooling-main operation.	When the low pressure (63LS) drops below 0.38 Mpa [55 psi] during cooling-only or cooling-main operation.
When high pressure (63HS1) rises	When 63HS1 exceeds 3.62MPa[525psi]	When 63HS1 is 3.43MPa [497 psi] or below in 30 seconds

(2) Bypass solenoid valve (SV2) (ON [energized] = Open)

Operation	SV2	
	ON	OFF
When high pressure (63HS1) rises during heating operation	While the compressor is operating at the minimum frequency and when 63HS1 exceeds 3.43 MPa [497 psi] during heating-only or heating-main operation	When 63HS is 2.65 MPa [384 psi] or below
When low pressure (63LS) drops during heating operation	When 63HS is below 1.47 MPa [213 psi] and 63LS is below 0.25 MPa [36 psi]	When 63HS is above 1.72 MPa [249 psi] or 63LS is above 0.39 MPa [56 psi]
Others	Always OFF (Closed)	

- On the module system, SV2 may open to balance the liquid refrigerant level depending on the TdSH values of both outdoor units. SV2 closes when TdSH is larger, and opens when TdSH is smaller. SV2 opens for maximum 1 minute and then closes.
- TdSH = TH4 - Tc

(3) Bypass solenoid valve (SV3) (ON [energized] = Open)

Operation	SV3	
	ON	OFF
During cooling mode	When the compressor frequency reaches 65 Hz during cooling-only mode	When the compressor frequency reaches 54 Hz during cooling-only mode
Others	Always OFF (Closed)	

- SV3 bypasses CV2a, CV2b, 21S4a, and 21S4b on the low-pressure side during cooling mode.

5-2-6 Frequency Control

- Depending on the capacity required, the frequency of the compressor is controlled to keep constant evaporation temperature (0°C [32°F] = 0.71 MPa [103 psi]) during cooling operation, and condensing temperature (49°C [120°F] = 2.88 MPa [418 psi]) during heating operation.
- The table below summarizes the operating frequency ranges of the inverter compressor during normal operation.
- The compressor frequency is divided into two types: preliminary frequency that is used as a control signal, and actual frequency that is obtained by converting the frequency reading of each type of unit.
- The OS in the multiple-outdoor-unit system operates at the actual compressor frequency value that is calculated by the OS based on the preliminary compressor frequency value that the OC determines.

Model	Preliminary frequency/cooling		Preliminary frequency/heating	
	Max	Min	Max	Min
P72	52Hz	10Hz	58Hz	27Hz
P96	65Hz	10Hz	74Hz	27Hz
P120	74Hz	18Hz	92Hz	27Hz
P144	97Hz	18Hz	113Hz	27Hz
P168	111Hz	37Hz	124Hz	37Hz
EP72	52Hz	18Hz	58Hz	27Hz
EP96	65Hz	18Hz	74Hz	27Hz
EP120	74Hz	37Hz	92Hz	37Hz
EP144	97Hz	37Hz	113Hz	37Hz
EP168	111Hz	37Hz	124Hz	37Hz
EP192	120Hz	30Hz	140Hz	30Hz
EP216	132Hz	30Hz	150Hz	30Hz
EP240	159Hz	30Hz	178Hz	30Hz

Note

The maximum frequency during heating operation depends on the outside air temperature and the dipswitch settings.

(1) Pressure limit

The upper limit of high pressure (63HS1) is preset, and when it exceeds the upper limit, the frequency is decreased every 15 seconds.

- The actuation pressure is when the high-pressure reading on 63HS1 is 3.58MPa[519psi].

(2) Discharge temperature limit

Discharge temperature (TH4) of the compressor in operation is monitored, and when it exceeds the upper limit, the frequency is decreased every minute.

- Operating temperature is 110°C [230°F].

(3) Periodic frequency control

Frequency control other than the ones performed at start-up, upon status change, and for protection is called periodic frequency control (convergent control) and is performed in the following manner.

Periodic control cycle

Periodic control is performed after the following time has passed

- 30 seconds after either compressor start-up or the completion of defrost operation
- 30 seconds after frequency control based on discharge temperature or pressure limit

The amount of frequency change

The amount of frequency change is controlled to approximate the target value based on the evaporation temperature (Te) and condensing temperature (Tc).

5-2-7 Defrost Operation Control

(1) Starting the defrost operation

- The defrost cycle will start when all of the three conditions (outside temperature, cumulative compressor operation time, and pipe temperature) under <Condition 1>, <Condition 2>, or <Condition 3> are met.

	Condition 1	Condition 2	Condition 3
Outside temperature (TH7)	-5ºC [23ºF] or above	-5ºC [23ºF] or below	
Cumulative compressor operation time	50 minutes or more 90 minutes or more if the defrost prohibit timer is set to 90.		250 minutes or more
Pipe temperature (TH3)	The pipe temperature has stayed below the temperatures in the table below (Note1) for three minutes.	((E)P72-(E)P168, EP192-EP240) The pipe temperature has stayed below the value obtained from the formula "Outside temperature (TH7) - 5ºC [23ºF] " for three minutes, or the 63LS reading has stayed below the value obtained from the formula "1.5 + 0.02 x (20+TH7)" for three minutes.	The pipe temperature has stayed below the temperatures in the table below (Note1) for three minutes

Note

1) Pipe temperature(TH3)

	P72	P96	P120	P144	P168
SW4 (915) OFF	-8ºC	-10ºC	-10ºC	-8ºC	-8ºC
SW4 (915) ON	-5ºC	-5ºC	-5ºC	-5ºC	-5ºC

	EP72	EP96	EP120	EP144	EP168	EP192	EP216	EP240
SW4 (915) OFF	-8ºC	-10ºC	-10ºC	-8ºC	-8ºC	-8ºC	-8ºC	-8ºC
SW4 (915) ON	-5ºC	-5ºC	-5ºC	-5ºC	-5ºC	-5ºC	-5ºC	-5ºC

- The defrost cycle will not start if other outdoor units are in the defrost cycle or until a minimum of 10 minutes have passed since the completion of the last defrost cycle.
- If 10 minutes have passed since compressor startup or since the completion of a defrost cycle, a forced defrost cycle can be started by setting DIP SW4 (913) to ON.
- Even if the defrost-prohibit timer is set to 90 minutes, the actual defrost-prohibit time for the next defrost cycle is 50 minutes if the last defrost cycle took 12 minutes.
- All units in the heating mode will simultaneously go into the defrost cycle in a system with multiple units. The units that are not in operation may or may not go into the defrost cycle, depending on the cumulative operation time of their compressors.
- All units in the heating mode will simultaneously go into the defrost cycle in a system with multiple units.
- Depending on the type of the connected indoor unit, etc., the next defrosting prohibition time may be 40 minutes.

(2) Defrost operation

Outdoor unit	Compressor frequency	Model	Compressor frequency
		(E)P72 models	79Hz
		(E)P96, (E)P120 models	107Hz
		(E)P144 models	121Hz
		(E)P168 models	128Hz
		EP192 model	191Hz
		EP216 model	191Hz
		EP240 model	191Hz
	Outdoor unit fan	Stopped	
	SV1a	ON (open)	
	LEV2a	(E)P72 - (E)P168: 3000, EP192 - EP240: 900 *1	
	LEV2b, 2c	3000	
	LEV2d	(E)P72 - (E)P120: 41, (E)P144 - (E)P168, EP192 - EP240: 20	
	LEV4	EP72 - EP240: 0	
	LEV9	480	
	21S4a, 21S4b, 21S4c	OFF	
	SV2	OFF (closed), ON (open)	
BC controller	LEV1	J type: 3000, JA type: 3000, KA type: 3000	
	LEV3(a)	J type: 3000, JA type: 3000, KA type: 3000, KB type: 60 (full closed)	
	LEV4 (JA and KA types only)	JA type: 3000, KA type: 3000	
	SVM1 (JA and KA types only)	ON	
	SVM1b (JA and KA types only)	ON	
	SVB	OFF	
	SVA	Ports that are connected to the indoor units in cooling Thermo-ON Other ports: OFF	

* When PWFY-AU model units are connected, SVA and SVC on the BC should be set to ON.
* On the module system, both outdoor units start in the defrost mode regardless of the operation mode before the defrost operation.
* The compressor frequency is fixed at 60Hz for 3 minutes.
* The compressor frequency is fixed at 60Hz when the compressor bottom SH (TH15 - Te) ≤ 10ºC [18ºF].

*1 For a combination of units (EP384 - EP432 models), LEV2a pulses is fixed at 41 for 10.5 minutes.

(3) Stopping the defrost operation

- The defrost cycle ends when 12 minutes*1 have passed*2 since the beginning of the cycle, or when the pipe temperatures (TH3) have been continuously detected for 4 minutes (when SW4 (916) is set to OFF) or 2 minutes (when SW4 (916) is set to ON) that exceeds the values in the table below.
- The defrost cycle will not end for two minutes once started unless one of the following conditions is met: Pipe temperature reaches 25°C [77°F] and SW4 (916) is set to OFF OR α*3 =25°C+TH7°C [77°F+TH7°F] and SW4 (916) is set to ON.
- In the multiple-outdoor-unit system, defrosting is stopped on all units at the same time.

*1 For a combination of units (EP384 - EP432 models), the defrost cycle ends when 15 minutes have passed.

*2 The compressor frequency is fixed at 60Hz when the compressor bottom SH (TH15 - Te) ≤ 10ºC [18ºF]. And the defrost mode may continue even after 12 minutes.

*3 (5°C [41°F] ≤ α ≤ 25°C [77°F]).

Model	TH3	
	SW4 (916) OFF	SW4 (916) ON
(E)P72 model	7°C [45°F]	12°C [54°F]
(E)P96 model	7°C [45°F]	12°C [54°F]
(E)P120 model	7°C [45°F]	12°C [54°F]
(E)P144 model	7°C [45°F]	12°C [54°F]
(E)P168 model	13°C [55°F]	18°C [64°F]
EP192 model	7°C [45°F]	12°C [54°F]
EP216 model	7°C [45°F]	12°C [54°F]
EP240 model	7°C [45°F]	12°C [54°F]

(4) Problems during defrost operation

- If a problem is detected during defrost operation, the operation will be stopped, and the defrost prohibition time based on the integrated compressor operation time will be set to 20 minutes.
- The unit will stop after the defrost operation when the total time of “compressor bottom SH (TH15 – Te) ≤ 10ºC [18ºF]” reaches 3 minutes.

(5) Change in the number of operating indoor units during defrost operation

- Even when there is a change in the number of operating indoor units during defrost operation, the operation will continue, and an adjustment will be made after the completion of the defrost operation.
- Defrost operation will be continued, even if the indoor units stop or under the Thermo-OFF conditions until it has run its course.

5-2-8 Continuous heating mode control

(1) Continuous heating mode start conditions

- Continuous heating mode will start when all the conditions listed in the table below are met (outside temperature, cumulative compressor operation time, and piping temperature).

  However, even when the conditions are met, after the maximum number of consecutive continuous heating operation shown below is performed, the reverse defrost operation will be performed one time.

- PURY-P-Y(T)NU-A/A1

	Single unit	Combination units
Outside temperature (TH7)	2.0°C [35.6°F] ≤ TH7 < 7.0°C [44.6°F]	-5.0°C [23.0°F] ≤ TH7 < 7.0°C [44.6°F]
Cumulative compressor operation time	When 50 minutes have passed	When 50 minutes have passed
Piping temperature (TH3)	TH7 − 8°C [46.4°F] < TH3 < 2.0°C [35.6°F]	TH7 − 8°C [46.4°F] < TH3 < 2.0°C [35.6°F]

- PURY-EP-Y(T)NU-A/A1

	Single unit	Combination units
Outside temperature (TH7)	1.0°C [33.8°F] ≤ TH7 < 7.0°C [44.6°F]	-5.0°C [23.0°F] ≤ TH7 < 7.0°C [44.6°F]
Cumulative compressor operation time	When 50 minutes have passed	When 50 minutes have passed
Piping temperature (TH3)	TH7 − 10°C [50°F] < TH3 < 2.0°C [35.6°F]	TH7 − 10°C [50°F] < TH3 < 2.0°C [35.6°F]

- Maximum number of consecutive continuous heating operations

PURY-P-Y(T)NU-A/A1	5 times
PURY-EP-Y(T)NU-A/A1	7 times

(2) Valve operation during Continuous heating cycle

1) When Single unit

Continuous heating operation is performed in the order shown below.
On a single unit model of P72-P144, EP72-EP144, and EP192-EP240, defrosting is performed on the front and rear heat exchangers separately, and on P168 and EP168 models, defrosting is performed on the front and left rear heat exchangers and the right rear heat exchanger separately. Valve actuation patterns differ on P models and EP models. Operation patterns are shown in the table below.

■PURY-P-Y(T)NU-A/A1, PURY-EP-Y(T)NU-A/A1

	P72-P120, EP72-EP120 models		P144, EP144 models		P168, EP168 models		EP192-EP240 models	
	Front HEX defrosting	Rear HEX defrosting	Front HEX defrosting	Rear HEX defrosting	Front and left rear HEX defrosting	Right rear HEX defrosting	Front HEX defrosting	Rear HEX defrosting
Outdoor unit fan 1	Stopped	Stopped	Stopped	Stopped	Stopped	Stopped	Stopped	Stopped
Outdoor unit fan 2	-		Stopped	Stopped	Stopped	Stopped	Stopped	Stopped
SV1a	OFF		OFF		OFF		OFF	
SV2	OFF		OFF		OFF		OFF	
SV3	-		-		-		OFF	
SV10	-		-		-		OFF	ON
LEV2a	200	3000	200	3000	200	3000	200	3000
LEV2b	1500	400	1500	400	200	3000	3000	41
LEV2c	-		-		3000	200	-	
LEV2d	3000	41	6000	20	6000	20	3000	20
21S4a	OFF	ON	OFF	ON	OFF	ON	OFF	ON
21S4b	ON	OFF	ON	OFF	OFF	ON	ON	
21S4c	-		-		ON	OFF	-	

2) When combination of units

For a combination of units, operation is split so that there is a unit for defrosting and a unit for the heating operation. If one of the combination of units is operated, the stopped unit is started, the unit that was operating is defrosted, and then the unit that was stopped before the control began is defrosted. At that time, operation by the outdoor units that make up the combination is as shown in the table below.

■PURY-P-Y(T)NU-A/A1, PURY-EP-Y(T)NU-A/A1

	P72-P120, EP72-EP120 models		P144, EP144 models		P168, EP168 models		EP192-EP216 models	
	Unit in defrost cycle	Unit in operation	Unit in defrost cycle	Unit in operation	Unit in defrost cycle	Unit in operation	Unit in defrost cycle	Unit in operation
Outdoor unit fan 1	Stopped	In operation	Stopped	In operation	Stopped	In operation	Stopped	In operation
Outdoor unit fan 2	-		Stopped	In operation	Stopped	In operation	Stopped	In operation
SV1a	ON*1	OFF	ON*1	OFF	ON*1	OFF	ON*1	OFF
SV2	ON*1	OFF	ON*1	OFF	ON*1	OFF	ON*1	OFF
SV3	-		-		-		OFF	
SV10	-		-		-		OFF	
LEV2a	1000	According to refrigerant equalization control	1000	According to refrigerant equalization control	1000	According to refrigerant equalization control	1000	According to refrigerant equalization control
LEV2b	1000	According to refrigerant equalization control	1000	According to refrigerant equalization control	1000	According to refrigerant equalization control	3000	According to refrigerant equalization control
LEV2c	-		-		1000	According to refrigerant equalization control	-	
LEV2d	3000	According to refrigerant equalization control	6000	According to refrigerant equalization control	6000	According to refrigerant equalization control	3000	According to refrigerant equalization control
21S4a	OFF	ON	OFF	ON	OFF	ON	OFF	ON
21S4b	OFF	ON	OFF	ON	OFF	ON	OFF	ON
21S4c	-		-		OFF	ON	-	

*1 The valve will turn off if TH4>80°C is met while defrosting of the second unit is performed while the unit is in operation.

(3) Continuous heating mode end conditions

- Continuous heating mode will end when the Continuous heating mode time in the table below is reached.

	Single unit	Combination units
Continuous heating mode time	When 10 minutes have passed	When 10 minutes have passed

- When the Continuous heating mode ends, the frequency is reduced once.

5-2-9 Refrigerant Recovery Control

Refrigerant recovery is performed for each BC port during heating operation to prevent the refrigerant from accumulating inside the units that are stopped (in the fan mode), in the cooling mode, or in the heating Thermo-OFF mode.
It is also performed during cooling operation to prevent an excessive amount of refrigerant from accumulating in the outdoor heat exchanger.

Starting criteria for the refrigerant recovery cycle (during Cooling-only, Cooling-main, Heating-only, or Heating-main mode)

The refrigerant recovery mode starts when all of the following conditions are met:

1) When 5 minutes have passed in the Heating-only or Heating-main mode or 30 seconds have passed in the Cooling-only or Cooling-main mode since the completion of the previous refrigerant recovery cycle AND the when following conditions are met.
   TH4 > 105°C [221°F]
2) When the port is not in the 4-minute restart delay mode

Starting criteria for the refrigerant recovery cycle (during Cooling-only, Cooling-main, Heating-only, or Heating-main mode)

1) When the port is in the cooling Thermo-OFF, fan, or stop mode
   SVC at the port turns on for 30 seconds.

2) The opening of LEV1 and LEV3 is increased.

5-2-10 Outdoor Unit Fan Control

(1) Control method

- Depending on the capacity required, the rotation speed of the outdoor fan is controlled by the inverter to keep a constant condensing temperature (outside temperature + 10°C [50°F]) during cooling operation and a constant evaporation temperature (0°C [32°F] = 0.71 MPa [103 psi]) during heating operation.
- The OS in the multiple-outdoor-unit system operates at the actual outdoor unit fan control value that is calculated by the OS based on the preliminary outdoor unit fan control value that the OC determines.

(2) Control

- Outdoor unit fan stops while the compressor is stopped (except in the presence of input from snow sensor).
- The fan operates at full speed for 5 seconds after start-up.(Only when TH7<0°C [32°F])
- The outdoor unit fan stops during defrost operation.
- Both fans operate on the (E)P96, (E)P120, (E)P144, (E)P168, EP192, EP216, and EP240 models of outdoor units.

(3) Outdoor heat exchanger capacity control pattern

- Outdoor fan rotation control is supported.
- As the operation pattern number increases, the refrigerant bypassing the outdoor heat exchanger increases. As the operation pattern number increases, the capacity difference becomes smaller between cooling operation and heating operation.
- In each mode, the four-way valve and the expansion valve operate as shown in the table on the next page. The expansion valve may open or close during the refrigerant equalization control or the evaporation temperature control. See [5-2-11 Expansion valve control (LEV2a, LEV2b, LEV2c, and LEV2d)]

Model	Operation mode	Operation patterns	Four-way valve			LEV			
			21S4a	21S4b	21S4c	LEV2a	LEV2b	LEV2c	LEV2d
(E)P72, (E)P96, (E)P120 models	Cooling-only Cooling-main	1	OFF	OFF	-	3000	3000	-	41
		2	OFF	ON	-	3000	41	-	1000
		3	OFF	ON	-	500	41	-	3000
		4	OFF	ON	-	300	41	-	3000
	Heating-only	1	ON	ON	-	3000	3000	-	41
	Heating-main	1	ON	ON	-	3000	3000	-	41
		2	ON	ON	-	3000	3000	-	1250*
	Defrost	1	OFF	OFF	-	3000	3000	-	41
(E)P144 models	Cooling-only Cooling-main	1	OFF	OFF	-	3000	3000	-	20
		2	OFF	ON	-	3000	41	-	800
		3	OFF	ON	-	3000	41	-	6000
		4	OFF	ON	-	1000	41	-	6000
	Heating-only	1	ON	ON	-	3000	3000	-	20
	Heating-main	1	ON	ON	-	3000	3000	-	20
		2	ON	ON	-	3000	3000	-	1000*
	Defrost	1	OFF	OFF	-	3000	3000	-	20
(E)P168 models	Cooling-only Cooling-main	1	OFF	OFF	OFF	3000	3000	3000	20
		2	OFF	ON	ON	3000	41	41	800
		3	OFF	ON	ON	3000	41	41	6000
		4	OFF	ON	ON	1000	41	41	6000
	Heating-only	1	ON	ON	ON	3000	3000	3000	20
	Heating-main	1	ON	ON	ON	3000	3000	3000	20
		2	ON	ON	ON	3000	3000	3000	1000*
	Defrost	1	OFF	OFF	OFF	3000	3000	3000	20
EP192, EP216, EP240 models	Cooling-only Cooling-main	1	OFF	OFF	-	3000	3000	-	20
		2	OFF	ON	-	3000	41	-	800
		3	OFF	ON	-	3000	41	-	6000
		4	OFF	ON	-	1000	41	-	6000
	Heating-only	1	ON	ON	-	900	3000	-	20
	Heating-main	1	ON	ON	-	900	3000	-	20
		2	ON	ON	-	900	3000	-	1000
	Defrost	1	OFF	OFF	-	900	3000	-	20

*During the liquid-balance operation in a system with combined units, the opening of LEV2d may fluctuate, but never goes beyond the value listed, to maintain a constant ratio of openings between LEV2d and LEV2a.

(4) Evaporation temperature control (Expansion valves LEV2a, LEV2b, and LEV2c)

- LEV is controlled every 30 seconds so that the temperature at the bypass inlet (TH15) of the BC controller is in a constant range during heating-main operation.

5-2-11 Expansion valve control (LEV2a, LEV2b, LEV2c, and LEV2d)

The default opening levels of the expansion valves LEV2a, LEV2b, and LEV2c are shown in Section [5-2-10 Outdoor Unit Fan Control]. When the following control (1) or (2) is performed during heating-only or heating-main operation, the valves open or close.

(1) Refrigerant equalization control

- On the combination models, to equalize the refrigerant amount between OC and OS, the opening levels of LEV2a, LEV2b, and LEV2c are controlled depending on the difference of TdSH between OC and OS. During the refrigerant equalization control, the opening levels of LEV2a, LEV2b, and LEV2c change on each unit. The LEV opening levels of the unit having smaller TdSH is lower than those of the unit with larger TdSH. Therefore, the opening levels of LEV2a, LEV2b, and LEV2c are sometimes smaller than the default opening levels.
- TdSH = TH4-Tc

(2) Evaporation temperature control

- LEV is controlled every 30 seconds so that the temperature at the bypass inlet (TH15) of the BC controller is in a constant range during the heating-only or heating-main operation.

5-2-12 Control of Controller Cooling Function (Electronic Expansion Valve <LEV9>)

- Control of controller cooling function is performed individually for OC and OS.
- The opening of LEV9 is adjusted every three seconds to keep the controller heatsink temperature (THHS) below the threshold value, which is determined by the setting of the outside temperature (TH7).

5-2-13 Injection Control (Linear Expansion Valve <LEV4>)

- LEV4 opening is adjusted every 30 seconds to keep the discharge temperature (TH4) within the predetermined range.
- Injection control starts when the outside temperature (TH7) drops below 5°C (41°F).

5-2-14 Control at Initial Startup

- When started up for the first time before 12 hours have elapsed after power on, the unit goes into the initial startup mode.
- At the completion of the initial operation mode on the OC and OS, they will go into the normal control mode.

(1) Single-outdoor-unit system

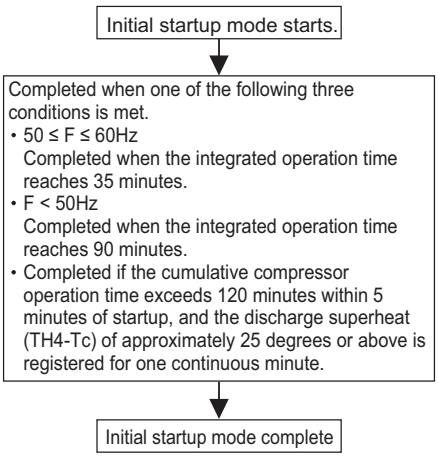

(2) Two-outdoor-unit system

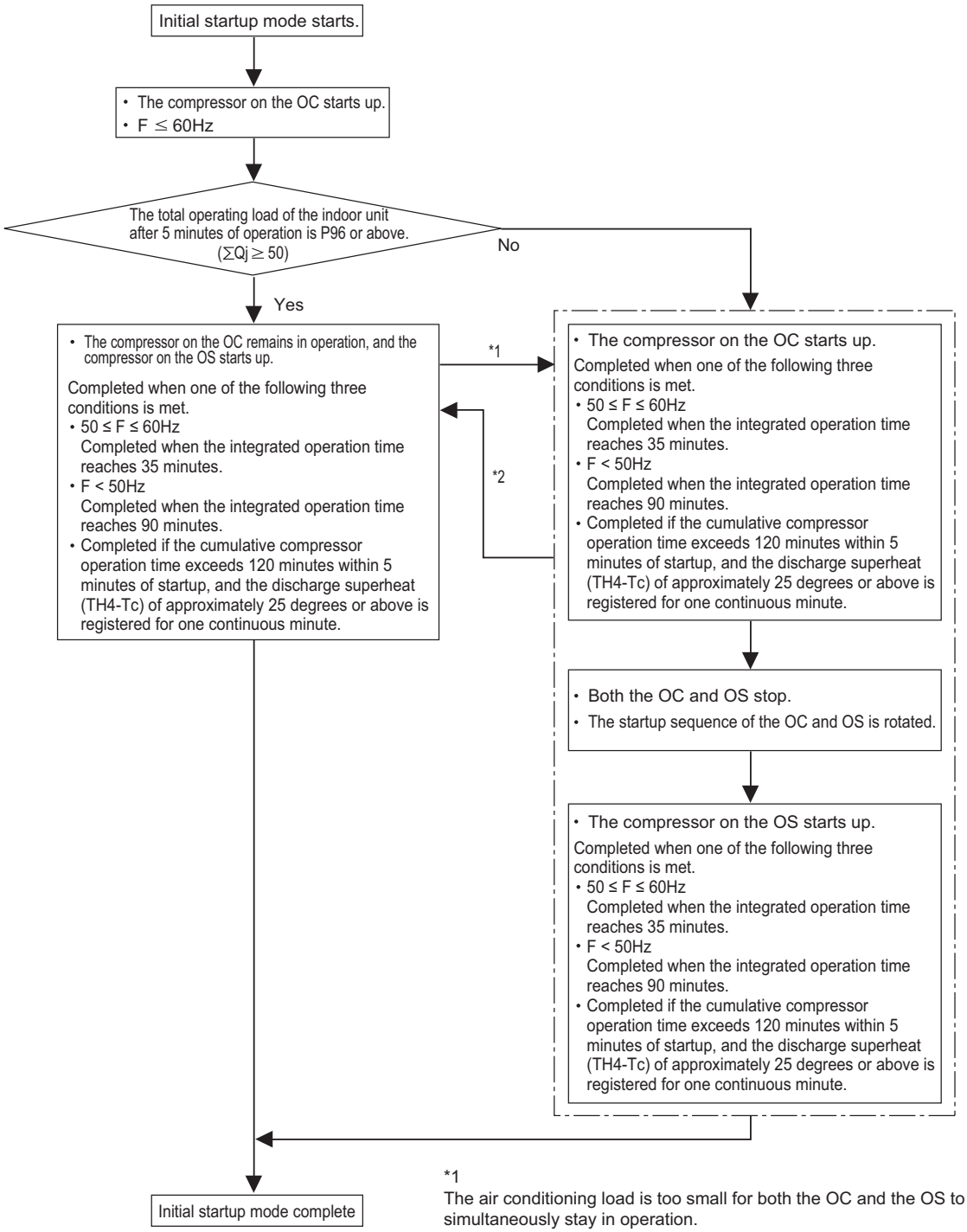

*1
The air conditioning load is too small for both the OC and the OS to simultaneously stay in operation.
*2
The air conditioning load is high enough for both OC and OS to simultaneously stay in operation.

5-2-15 Emergency Operation Mode

1. Problems with the outdoor unit

- Systems with two outdoor units have a mode that allows one of the outdoor units to perform a backup operation when the other outdoor unit in the system malfunctions.
- This mode can be started by performing an error reset via the remote controller.

(1) Starting the emergency operation

1) When an error occurs, the error source and the error code will be displayed on the display on the remote controller.
2) The error is reset using the remote controller.
3) If an error code appears that permits an emergency operation in step 1) above, (See the table below.), the retry operation starts.
4) If the same error is detected during the retry operation (step 3) above), an emergency operation can be started by resetting the error via the remote controller.

Error codes that permit an emergency operation (Applicable to both OC and OS)

Trouble source		Error codes that permit an emergency operation	Error code description
Compressor Fan motor Inverter		0403	Serial communication error
		4220,4225,4226	Bus voltage drop
		4230,4235	Heatsink overheat protection
		4240,4245	Overload protection
		4250,4255,4256	Overcurrent relay trip
		5110	Heatsink temperature sensor failure (THHS)
		5301	Current sensor/circuit failure
		5305,5306	Position error
Thermistor	TH3	5103	Pipe temperature sensor failure
	TH4	5104	Discharge temperature sensor failure
	TH5	5105	Accumulator inlet temperature sensor failure
	TH7	5107	Outside air temperature sensor failure
	TH15	5115	Compressor shell bottom temperature sensor fault
	TH16	5116	Accumulator temperature (Bottom) sensor failure
	TH17	5117	Accumulator temperature (Middle) sensor failure
	TH18	5118	Accumulator temperature (High) sensor failure
Power		4102	Open phase
		4115	Power supply sync signal abnormality

Emergency operation pattern (2 outdoor units)

		OC failure pattern	OS failure pattern
OC		Trouble	Normal
OS		Normal	Trouble
Emergency operation	Cooling	Permitted	Permitted
	Heating	Permitted	Permitted
Maximum total capacity of indoor units (Note 1)		60%	

Note

1) If an attempt is made to put into operation a group of indoor units whose total capacity exceeds the maximum allowable capacity, some of the indoor units will go into the same condition as Thermo-OFF.

(2) Ending the emergency operation

1) End conditions

When one of the following conditions is met, emergency operation stops, and the unit makes an error stop.

- When the integrated operation time of compressor in cooling mode has reached four hours.
- When the integrated operation time of compressor in heating mode has reached two hours.
- When an error is detected that does not permit the unit to perform an emergency operation.

2) Control at or after the completion of emergency operation

- At or after the completion of emergency operation, the compressor stops, and the error code reappears on the remote controller.
- If another error reset is performed at the completion of an emergency mode, the unit repeats the procedures in section (1) above.
- To stop the emergency mode and perform a current-carrying operation after correcting the error, perform a power reset.

2. Communication circuit failure or when some of the outdoor units are turned off

This is a temporary operation mode in which the outdoor unit that is not in trouble operates when communication circuit failure occurs or when some of the outdoor units are turned off.

(1) Starting the emergency operation (When the OC is in trouble)

1) When an error occurs, the error source and the error code appear on the display on the remote controller.
2) Reset the error via the remote controller to start an emergency operation.

Precautions before servicing the unit

- When the OC is in trouble, the OS temporarily takes over the OC's function and performs an emergency operation. When this happens, the indoor unit connection information are changed.
- In a system that has a billing function, a message indicating that the billing system information has an error may appear on the TG-2000A. Even if this message appears, do not change (or set) the refrigerant system information on the TG-2000A. After the completion of an emergency operation, the correct connection information will be restored.

(2) Starting the emergency operation (When the OS is in trouble)

1) A communication error occurs. → An emergency operation starts in approximately six minutes.

Error codes that permit an emergency operation (Applicable to both OC and OS)

Trouble source	Error codes that permit an emergency operation	Error code description
Circuit board failure or the power to the outdoor units is off	6607	No acknowledgement error
	6608	No response error

Emergency operation pattern (2 outdoor units)

		OC failure pattern	OS failure pattern
OC		Trouble	Normal
OS		Normal	Trouble
Emergency operation	Cooling	Permitted	Permitted
	Heating	Permitted	Permitted
Maximum total capacity of indoor units (Note 1)		Capacity that matches the total capacity of the operable outdoor units	

Note

1) If an attempt is made to put into operation a group of indoor units whose total capacity exceeds the maximum allowable capacity, some of the indoor units will go into the same condition as Thermo-OFF.

(3) Ending the emergency operation

When communication is restored, the emergency mode is cancelled, and the units go into the normal operation mode.

5-2-16 Operation Mode

(1) Indoor unit operation mode

The operation mode can be selected from the following 6 modes using the remote controller.

1	Cooling mode
2	Heating mode
3	Dry mode
4	Automatic cooling/heating mode
5	Fan mode
6	Stopping mode

(2) Outdoor unit operation mode

1	Cooling only mode	All indoor units in operation are in cooling mode.
2	Heating only mode	All indoor units in operation are in heating mode.
3	Cooling main mode	Coexistence of units in cooling and heating modes.
4	Heating main mode	Coexistence of units in cooling and heating modes.
5	Stopping mode	All indoor units are in fan mode or stopping mode.

Note

When units in cooing and heating coexist, the operation mode (cooling main mode or heating main mode) will be determined, based on the refrigerant pressure in the R2 refrigerant circuit and speed variation data.

(3) Operation pattern for automatic cooling/heating mode

When the automatic cooling/heating mode is selected from remote controller functions, the indoor temperature will be detected in pattern as shown in the figure below, and the operation mode (cooling or heating) will automatically be selected.

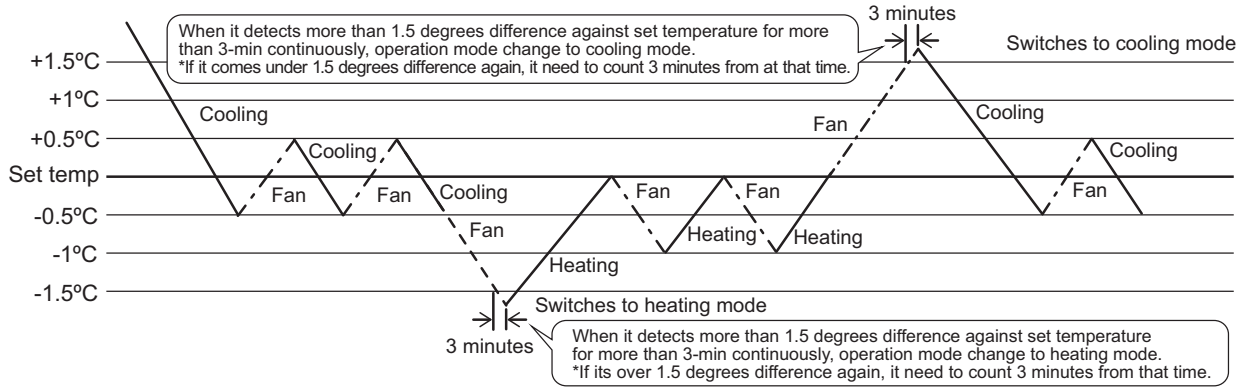

(4) Relationship between the operation mode and the load capacity (kW) (within a system)

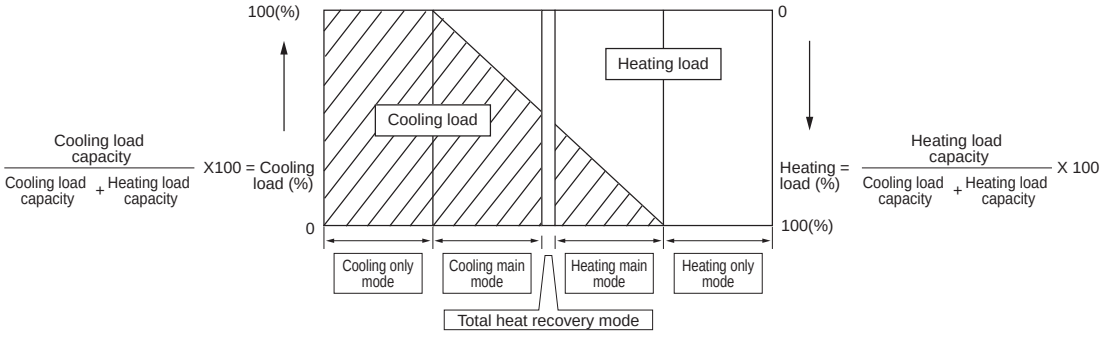

5-2-17 Demand Control

Cooling/heating operation can be prohibited (Thermo-OFF) by an external input to the indoor units.

Note

When DIP SW6-8 is set to ON, the 4-step DEMAND control is enabled.
Eight-step demand control is possible in the system with two outdoor units.

For details, refer to the following page(s). [2-4-7 Various Control Methods Using the Signal Input/Output Connector on Outdoor Unit]

5-2-18 Control of IH energization without the compressor in operation <Type A only>

IH is used to heat the compressor motor on the stopped outdoor unit to make liquid refrigerant in the compressor evaporate or to keep liquid refrigerant from flooding the compressor.

- Initial power on after power is turned on: Stays on for 12 hours, and then transitions to the operation that is performed while the compressor is stopped
- When the compressor is stopped: Stays on for 30 minutes after the compressor stopped, and then repeats the off-on cycle at 30-minute intervals
- Lit LED1 on the INV board indicates that the INV board is energized by an IH.

5-3 BC Controller Control

1. Control of SVA, SVB, and SVC

SVA, SVB, and SVC turn on or off depending on the operation mode of the branch.

		Mode			
		Cooling	Heating	Stopped	Defrost
Port	SVA	ON	OFF	OFF	OFF
	SVB	OFF	ON	OFF	OFF
	SVC	ON	OFF	OFF	OFF

2. Control of SVM1 snd SVM1b

SVM turns on or off depending on the operation mode.

Operation mode	Cooling only	Cooling main	Heating only	Heating main	Defrost	Stopped
SVM1,1b	ON	Pressure differential control*1	OFF	OFF	ON	OFF

*1. Pressure differential control: The detected differential pressure (PS1 and PS3) is controlle every minute so as to be within a certain range.

3. Control of LEV

LEV opening (sj) is controlled as follows depending on the operation mode.

	Operation mode	Cooling only	Cooling main	Heating only	Heating main	Defrost	Stopped
J, JA, KA type	LEV1	3000	Liquid level control*1 differential control*2	85*3	85*3	3000	900
	LEV3	Superheat control*4		Pressure differential control*2	Pressure differential control*2	3000	41
	LEV4 (JA and KA types only)	41	41	Pressure differential control*2	Pressure differential control*2	3000	41
KB type	LEV3	Superheat control*4	Superheat control*4	60	60	60	60

*1. Liquid level control: The liquid level detected by the liquid inlet temperature (TH11 sensor) is controlled so as to be within a certain range.

*2. Pressure differential control: The detected differential pressure (PS1 and PS3) is controlle every minute so as to be within a certain range.

*3. Can be 85 or more due to pressure rise on the liquid side (PS1).

*4. Superheat control: The amound of superheat that is calculated on the bypass inlet and outlet temperature (TH12, TH15) is controlled every minute so as to be within a certain range.

Chapter 6 Test Run

6-1 Read before Test Run 1

6-2 Operation Characteristics and Refrigerant Charge 2

6-3 Evaluating and Adjusting Refrigerant Charge 2

6-3-1 Refrigerant Overcharge and undercharge 2

6-3-2 Checking the Refrigerant Charge during Operation 2

6-3-3 Maximum refrigerant charge 3

6-3-4 Refrigerant Charge Adjustment Mode 4

6-4 The Following Symptoms Are Normal 6

6-1 Read before Test Run

(1) Check for refrigerant leak and loose cables and connectors.

(2) When opening or closing the front panel of the control box, do not let it come into contact with any of the internal components.

Note

- Before inspecting the inside of the control box, turn off the power, leave the unit turned off for at least 10 minutes, and check that the voltage across pins 1 and 5 of connector RYPN has dropped to 20 VDC or less. (It takes approximately 10 minutes to discharge electricity after the power is turned off.)
- Control box houses high temperature parts. Be well careful even after turning off the power source.
- Disconnect the relay connectors (RYFAN 1 and RYFAN 2) on the outdoor unit fan before performing maintenance work. (Before connecting or disconnecting the connector, check that the outdoor unit fan is stopped and that the voltage across pins 1 and 5 of connector RYPN has dropped to 20 VDC or less. If the outdoor unit fan is turned by strong winds, the main circuit capacitor will be energized and poses an electric shock hazard. Refer to the wiring diagram name plate for details.
- To connect wiring to TB7, check that the voltage is 20 VDC or below.
- Reconnect the relay connectors (RYFAN 1 and RYFAN 2) on the outdoor unit fan after completion of maintenance work.

(3) Measure the insulation resistance between the power supply terminal block and the ground with a 500V megger and make sure it reads at least 1.0Mohm.

Note

- Do not operate the unit if the insulation resistance is below 1.0Mohm.
- Do not apply megger voltage to the terminal block for transmission line. Doing so will damage the controller board.
- The insulation resistance between the power supply terminal block and the ground could go down to close to 1Mohm immediately after installation or when the power is kept off for an extended period of time because of the accumulation of refrigerant in the compressor.
- If insulation resistance reads at least 1 MΩ, by turning on the main power and keeping it on for at least 12 hours, the refrigerant in the compressor will evaporate and the insulation resistance will go up.
- Do not measure the insulation resistance of the terminal block for transmission line for the unit remote controller.

(4) When the power is turned on, the compressor or heater is energized even while the compressor is not operating.

Note

- Before turning on the power, disconnect all power supply wires from the compressor terminal block, and measure the insulation resistance of the compressor.
- Check the compressor for a ground fault. If the insulation resistance is 1.0 MΩ or below, connect all power supply wires to the compressor and turn on the power to the outdoor unit. (The liquid refrigerant in the compressor will evaporate by energizing the compressor or the heater.)

(5) Make sure the valves on both the high-pressure and low-pressure sides are fully open.

Note

Securely tighten the cap.

(6) Check the phase sequence and the voltage of the power supply.

When the voltage is out of the ±10% range, or when the phase voltage difference is more than 2%, please discuss the countermeasure with the customer.

(7) [When a transmission booster is connected] Turn on the transmission booster before turning on the outdoor units.

Note

- If the outdoor units are turned on first, the connection information for the refrigerant circuit may not be properly recognized.
- In case the outdoor units are turned on before the transmission booster is turned on, perform a power reset on the outdoor units after turning on the power booster.

(8) Turn on the main power at least 12 hours before test run.

Note

Insufficient powering time may result in compressor damage.

(9) When a power supply unit is connected to the transmission line for centralized control(*), perform a test run with the power supply unit being energized. Leave the power jumper connector on CN41 as it is (factory setting).

*Includes the cases where power is supplied to the transmission line from a system controller with a power-supply function

6-2 Operation Characteristics and Refrigerant Charge

It is important to have a clear understanding of the characteristics of refrigerant and the operating characteristics of air conditioners before attempting to adjust the refrigerant amount in a given system.

The following shows items of particular importance.

1) During cooling operation, the amount of refrigerant in the accumulator is the smallest when all indoor units are in operation.
2) During heating operation, the amount of refrigerant in the accumulator is the largest when all indoor units are in operation.
3) General tendency of discharge temperature
   - Discharge temperature tends to rise when the system is short on refrigerant.
   - Changing the amount of refrigerant in the system while there is refrigerant in the accumulator has little effect on the discharge temperature.
   - The higher the pressure, the more likely it is for the discharge temperature to rise.
   - The lower the pressure, the more likely it is for the discharge temperature to rise.
4) When the amount of refrigerant in the system is adequate, the compressor shell temperature is 10 to 60°C [18 to 108°F] higher than the low pressure saturation temperature (Te).

   → If the temperature difference between the compressor shell temperature and low pressure saturation temperature (Te) is smaller than 5°C [9°F], an overcharging of refrigerant is suspected.

6-3 Evaluating and Adjusting Refrigerant Charge

6-3-1 Refrigerant Overcharge and undercharge

Overcharging or undercharging of refrigerant can cause the following symptoms:
Before attempting to adjust the amount of refrigerant in the system, thoroughly check the operating conditions of the system. Then, adjust the refrigerant amount by running the unit in the refrigerant amount adjust mode.

The system comes to an abnormal stop, displaying 1500 (overcharged refrigerant) on the controller.	Overcharged refrigerant
The operating frequency does not reach the set frequency, and there is a problem with performance.	Insufficient refrigerant amount
The system comes to an abnormal stop, displaying 1102 (abnormal discharge temperature) on the controller.	

6-3-2 Checking the Refrigerant Charge during Operation

Operate all indoor units in either cooling-only or heating-only mode, and check such items as discharge temperature, subcooling, low pressure, suction temperature, and shell bottom temperature to estimate the amount of refrigerant in the system.

Symptoms	Conclusion
Discharge temperature is high. (Normal discharge temperature is below 100°C [212°F].) *	Slightly under-charged refrigerant
Low pressure is unusually low.	
Suction superheat is large. (Normal suction superheat is less than 20°C [36°F].)	
Compressor shell bottom temperature is high. (The difference between the compressor shell bottom temperature and low pressure saturation temperature (Te) is greater than 60°C [108°F].)	
Discharge superheat is small. (Normal discharge superheat is greater than 10°C [18°F].)	Slightly overcharged refrigerant
Compressor shell bottom temperature is low. (The difference between the compressor shell bottom temperature and low pressure saturation temperature (Te) is less than 5°C [9°F].)	

*Evaluate the refrigerant amount using other criteria during the injection control.

6-3-3 Maximum refrigerant charge

There is a limit to the amount of refrigerant that can be charged into a unit. Observe the maximum refrigerant charge in the table below.

♦P72-168Y(T)NU-A/A1

Total index of the outdoor units	P72	P96	P120	P144	P168
Factory charge (kg) (oz)	5.2 (184)	8.0 (283)	8.0 (283)	10.8 (381)	10.8 (381)
Maximum additional refrigerant charge on site (kg) (oz)	28.3 (999)	33.5 (1182)	39.5 (1394)	38.2 (1348)	38.2 (1348)
Maximum refrigerant charge (kg) (oz)	33.5 (1182)	41.5 (1464)	47.5 (1676)	49.0 (1729)	49.0 (1729)

♦P192-336Y(T)SNU-A/A1

Total index of the outdoor units	P192	P216	P240	P264	P288	P312	P336
Factory charge (kg) (oz)	16.0 (565)	16.0 (565)	16.0 (565)	18.8 (664)	21.6 (762)	21.6 (762)	21.6 (762)
Maximum additional refrigerant charge on site (kg) (oz)	58 (2046)	74 (2611)	74 (2611)	71.2 (2512)	68.4 (2413)	68.4 (2413)	68.4 (2413)
Maximum refrigerant charge (kg) (oz)	74 (2611)	90 (3175)	90 (3175)	90 (3175)	90 (3175)	90 (3175)	90 (3175)

♦EP72-240Y(T)NU-A/A1

Total index of the outdoor units	EP72	EP96	EP120	EP144	EP168	EP192	EP216	EP240
Factory charge (kg) (oz)	5.2 (184)	8.0 (283)	8.0 (283)	10.8 (381)	10.8 (381)	11.8 (416)	11.8 (416)	11.8 (416)
Maximum additional refrigerant charge on site (kg) (oz)	28.3 (999)	33.5 (1182)	39.5 (1394)	38.2 (1348)	38.2 (1348)	38.5 (1359)	38.5 (1359)	38.5 (1359)
Maximum refrigerant charge (kg) (oz)	33.5 (1182)	41.5 (1464)	47.5 (1676)	49.0 (1729)	49.0 (1729)	50.3 (1775)	50.3 (1775)	50.3 (1775)

♦EP192-336Y(T)SNU-A/A1

Total index of the outdoor units	EP192	EP216	EP240	EP264	EP288	EP312	EP336
Factory charge (kg) (oz)	16.0 (565)	16.0 (565)	16.0 (565)	18.8 (664)	21.6 (762)	21.6 (762)	21.6 (762)
Maximum additional refrigerant charge on site (kg) (oz)	58 (2046)	74 (2611)	74 (2611)	71.2 (2512)	68.4 (2413)	68.4 (2413)	68.4 (2413)
Maximum refrigerant charge (kg) (oz)	74 (2611)	90 (3175)	90 (3175)	90 (3175)	90 (3175)	90 (3175)	90 (3175)

♦EP384-432Y(T)SNU-A/A1

Total index of the outdoor units	EP384	EP432
Factory charge (kg) (oz)	23.6 (833)	23.6 (833)
Maximum additional refrigerant charge on site (kg) (oz)	54.4 (1919)	54.4 (1919)
Maximum refrigerant charge (kg) (oz)	78 (2752)	78 (2752)

6-3-4 Refrigerant Charge Adjustment Mode

Follow the procedures below to add or extract refrigerant as necessary depending on the operation mode.

When the function switch (SW4 (922)) on the main board on the outdoor unit (OC only) is turned to ON, the unit goes into the refrigerant amount adjust mode, and operation <A> below is followed.

Note

The unit will not go into the refrigerant amount adjust mode when the switch on the OS is set to ON.

Operation <A>
When the unit is in the refrigerant amount adjust mode, the LEV on the indoor unit does not open as fully as it normally does during cooling operation to secure subcooling.

Note

1) Adjust the refrigerant amount using TH4, TH3, Tc, SC11 (on the BC), and SC16 (on the BC) according to the flowchart on the next page.
   Check the TH4, TH3, Tc, SC11 (on the BC), and SC16 (on the BC) values according to the flowchart. The TH4, TH3, Tc, SC11 (on the BC), and SC16 (on the BC) values can be displayed by setting the self-diagnosis switch (SW4 (SW6-10): OFF)) on the control board of the OC or OS.
2) There may be cases when the refrigerant amount may seem adequate for a short while after starting the unit in the refrigerant amount adjust mode but turn out to be inadequate later on (when the refrigerant system stabilizes).
   When the amount of refrigerant is truly adequate.
   All the following formulas are true:
   3°C [5.4°F] ≤ SC11 (on the BC) on the outdoor unit ≤ 10°C [18°F]
   10°C [18°F] ≤ SC16 (on the BC) on the outdoor unit
   5°C [9°F] ≤ SH on the indoor unit ≤ 15°C [27°F]
   The refrigerant amount may seem adequate at the moment, but may turn out to be inadequate later on.
   Any of the following formulas is true:
   SC11 (on the BC) on the outdoor unit < 3°C [5.4°F]
   SC11 (on the BC) on the outdoor unit > 10°C [18°F]
   SC16 (on the BC) on the outdoor unit < 10°C [18°F]
   SH on the indoor unit < 5°C [9°F]
   In this case, check the refrigerant amount after all the following formulas become true:
   3°C [5.4°F] ≤ SC11 (on the BC) on the outdoor unit ≤ 10°C [18°F]
   10°C [18°F] ≤ SC16 (on the BC) on the outdoor unit
   5°C [9°F] ≤ SH on the indoor unit ≤ 15°C [27°F]
3) If the high pressure is not at least 2.0 MPa [290 psi], a correct judgment will not be possible for refrigerant adjustment. Perform the adjustment when the outdoor air temperature is at least 20°C.
4) Refrigerant amount adjust mode automatically ends 90 minutes after beginning. When this happens, by turning off the SW4 (922) and turning them back on, the unit will go back into the refrigerant amount adjust mode.

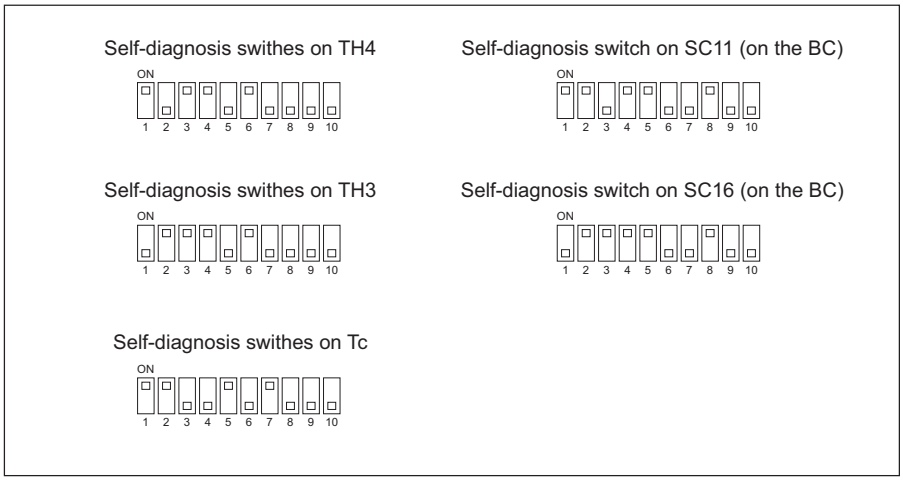

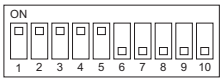

The figure at left shows that the switches 1 through 5 are set to ON and 6 through 10 are set to OFF.

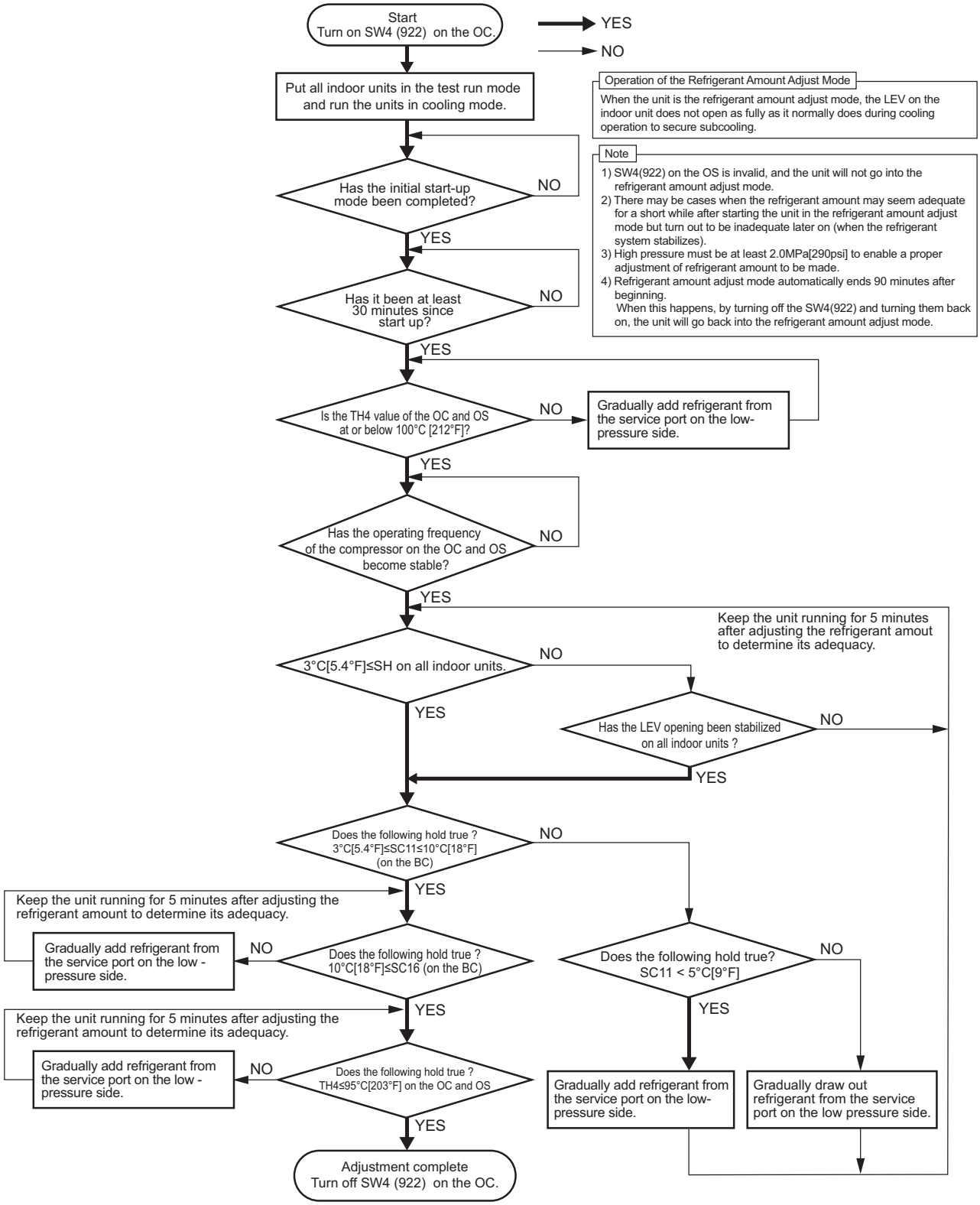

⚠ CAUTION

Do not release the extracted refrigerant into the air.

⚠ CAUTION

Charge liquid refrigerant (as opposed to gaseous refrigerant) into the system.

- If gaseous refrigerant is charged into the system, the composition of the refrigerant in the cylinder will change and may result in performance loss.

6-4 The Following Symptoms Are Normal

Symptoms	Remote controller display	Cause
The indoor unit does not start after starting cooling (heating) operation.	"Cooling (heating)" icon blinks on the display.	The unit cannot perform a heating (cooling) operation when other indoor units on the same refrigerant system, are performing a cooling (heating) operation.
The auto vane adjusts its position by itself.	Normal display	After an hour of cooling operation with the auto vane in the vertical position, the vane may automatically move into the horizontal position. Louver blades will automatically move into the horizontal position while the unit is in the defrost mode, pre-heating stand-by mode, or when the thermostat triggers unit off.
The fan speed changes during heating.	Normal display	Very Low fan speed when "Thermo-OFF.' Changes from Very Low to preset fan speed when "Thermo-ON" depending on pipe temperature.
The fan stops during heating operation.	Defrost	The fan remains stopped during defrost operation.
The fan keeps running after the unit has stopped.	Unlit	When the auxiliary heater is turned on, the fan operates for one minute after stopping to dissipate heat.
The fan speed does not reach the set speed when operation switch is turned on.	STAND BY	The fan operates at extra low speed for 5 minutes after it is turned on or until the pipe temperature reaches 35°C[95°F], then it operates at low speed for 2 minutes, and finally it operates at the set speed. (Pre-heating stand-by)
When the main power is turned on, the display shown on the right appears on the indoor unit remote controller for 5 minutes.	"HO" or "PLEASE WAIT" icons blink on the display.	The system is starting up. Wait until the blinking display of "HO" or "PLEASE WAIT" go off.
The drain pump keeps running after the unit has stopped.	Unlit	The drain pump stays in operation for three minutes after the unit in the cooling mode is stopped.
The drain pump is running while the unit is stopped.	Unlit	When drain water is detected, the drain pump goes into operation even while the unit is stopped.
Indoor unit makes noise during cooling/heating changeover.	Normal display	This noise is made when the refrigerant circuit is reversed and is normal.
Sound of the refrigerant flow is heard from the indoor unit immediately after starting operation.	Normal display	This is caused by the transient instability of the refrigerant flow and is normal.
Warm air sometimes comes out of the indoor units that are not in the heating mode.	Normal display	This is due to the fact that the LEVs on some of the indoor units are kept slightly open to prevent the refrigerant in the indoor units that are not operating in the heating mode from liquefying and accumulating in the compressor. It is part of a normal operation.
In a short while after the outdoor unit stops, the unit makes a clicking sound.	No display	After the unit stops and before the unit performs pressure equalization, the pressure difference temporarily becomes small and the check valve may vibrate and make a sound. This is temporary and does not imply a problem.

Chapter 7 Troubleshooting Using Error Codes

7-1 Error Code and Preliminary Error Code Lists 1

7-2 Error Code Definitions and Solutions: Codes [0 - 999] 8

7-2-1 Error Code [0403] 8

7-2-2 Error Code [0404] 9

7-3 Error Code Definitions and Solutions: Codes [1000 - 1999] 10

7-3-1 Error Code [1102] 10

7-3-2 Error Code [1301] 11

7-3-3 Error Code [1302] (during operation) 12

7-3-4 Error Code [1302] (at startup) 13

7-3-5 Error Code [1500] 13

7-4 Error Code Definitions and Solutions: Codes [2000 - 2999] 14

7-4-1 Error Code [2500] (Models with a drain sensor) 14

7-4-2 Error Code [2500] (Models with a float switch) 15

7-4-3 Error Code [2502] (Models with a drain sensor) 16

7-4-4 Error Code [2502] (Models with a float switch) 17

7-4-5 Error Code [2503] 18

7-4-6 Error Code [2600] 19

7-4-7 Error Code [2601] 19

7-5 Error Code Definitions and Solutions: Codes [3000 - 3999] 20

7-5-1 Error Code [3121] 20

7-5-2 Error Code [3511] 21

7-5-3 Error Code [3512] 22

7-6 Error Code Definitions and Solutions: Codes [4000 - 4999] 23

7-6-1 Error Code [4102] 23

7-6-2 Error Code [4106] 24

7-6-3 Error Code [4109] 24

7-6-4 Error Code [4114] 25

7-6-5 Error Code [4116] 25

7-6-6 Error Code [4121] 25

7-6-7 Error Code [4124] 26

7-6-8 Error Code [4220, 4225, 4226] Detail Code 108 27

7-6-9 Error Code [4220, 4225, 4226] Detail Code 108 28

7-6-10 Error Code [4220, 4225, 4226] Detail Code 109 29

7-6-11 Error Code [4220] Detail Code 110 29

7-6-12 Error Code [4220, 4225, 4226] Detail Code 111, 112 30

7-6-13 Error Code [4220] Detail Code 123 30

7-6-14 Error Code [4220] Detail Code 129 31

7-6-15 Error Code [4220, 4225, 4226] Detail Code 131 31

7-6-16 Error Code [4220, 4225, 4226] Detail Code 131 32

7-6-17 Error Code [4230] Detail Code 125 32

7-6-18 Error Code [4235, 4236] Detail Code 125 33

7-6-19 Error Code [4230] Detail Code 126 33

7-6-20 Error Code [4240, 4245, 4246] 34

7-6-21 Error Code [4240, 4245, 4246] 35

7-6-22 Error Code [4250, 4255, 4256] Detail Code 101 36

7-6-23 Error Code [4250, 4255, 4256] Detail Code 104 37

7-6-24 Error Code [4250, 4255, 4256] Detail Code 105 38

7-6-25 Error Code [4250, 4255, 4256] Detail Code 106 and 107 ... 39
7-6-26 Error Code [4250] Detail Code 121, 128, and 122 ... 40
7-6-27 Error Code [4255, 4256] Detail Code 137 ... 40
7-6-28 Error Code [4260] ... 41

7-7 Error Code Definitions and Solutions: Codes [5000 - 5999] ... 42
7-7-1 Error Code [5101, 5102, 5103, 5104] ... 42
7-7-2 Error Code [5103,5104,5105,5107,5115,5116,5117,5118] ... 43
7-7-3 Error Code [5110] ... 45
7-7-4 Error Code [5111,5112,5115,5116] ... 45
7-7-5 Error Code [5120] ... 46
7-7-6 Error Code [5201] ... 46
7-7-7 Error Code [5201, 5203] ... 47
7-7-8 Error Code [5301] Detail Code 115 ... 47
7-7-9 Error Code [5301] Detail Code 115 ... 48
7-7-10 Error Code [5301] Detail Code 117 ... 49
7-7-11 Error Code [5301] Detail Code 119 ... 49
7-7-12 Error Code [5301] Detail Code 120 ... 50
7-7-13 Error Code [5301] Detail Code 127 ... 50
7-7-14 Error Code [5305, 5306] Detail Code 135 ... 51
7-7-15 Error Code [5305, 5306] Detail Code 136 ... 51
7-7-16 Error Code [5701] ... 52

7-8 Error Code Definitions and Solutions: Codes [6000 - 6999] ... 53
7-8-1 Error Code [6201] ... 53
7-8-2 Error Code [6202] ... 53
7-8-3 Error Code [6600] ... 54
7-8-4 Error Code [6601] ... 54
7-8-5 Error Code [6602] ... 55
7-8-6 Error Code [6603] ... 56
7-8-7 Error Code [6606] ... 56
7-8-8 Error Code [6607] Error Source Address = Outdoor Unit (OC) ... 57
7-8-9 Error Code [6607] Error Source Address = BC controller (BC) ... 58
7-8-10 Error Code [6607] Error Source Address = Indoor Unit (IC) ... 59
7-8-11 Error Code [6607] Error Source Address = LOSSNAY (LC) ... 61
7-8-12 Error Code [6607] Error Source Address = ME Remote Controller ... 62
7-8-13 Error Code [6607] Error Source Address = System Controller ... 63
7-8-14 Error Code [6607] All Error Source Addresses ... 64
7-8-15 Error Code [6607] No Error Source Address ... 65
7-8-16 Error Code [6608] ... 66
7-8-17 Error Code [6831] ... 67
7-8-18 Error Code [6832] ... 68
7-8-19 Error Code [6833] ... 69
7-8-20 Error Code [6834] ... 70
7-8-21 Error Code [6840] ... 71
7-8-22 Error Code [6841] ... 71
7-8-23 Error Code [6842] ... 72
7-8-24 Error Code [6843] ... 73
7-8-25 Error Code [6846] ... 74

7-9 Error Code Definitions and Solutions: Codes [7000 - 7999] ... 75
7-9-1 Error Code [7100] ... 75

7-9-2 Error Code [7101] 76
7-9-3 Error Code [7102] 77
7-9-4 Error Code [7105] 78
7-9-5 Error Code [7106] 78
7-9-6 Error Code [7107] 79
7-9-7 Error Code [7110] 80
7-9-8 Error Code [7111] 80
7-9-9 Error Code [7113] 81
7-9-10 Error Code [7117] 83
7-9-11 Error Code [7130] 84

7-1 Error Code and Preliminary Error Code Lists

Error Code	Prelimi-nary error code	Error (prelim-inary) detail code	Error code definition	Searched unit					Notes
				Outdoor unit	Indoor unit	BC controller	LOSSNAY	Remote controller	
0403	4300 4305 4306	1 5 6 (Note)	Serial communication error/Panel communication error	O	O				(page 8)
0404	-	-	Indoor unit EEPROM abnormality		O				(page 9)
1102	1202	-	Discharge temperature fault	O					(page 10)
1301	-	-	Low pressure fault	O					(page 11)
1302	1402	-	High pressure fault	O					(page 12)
1500	1600	-	Refrigerant overcharge	O					(page 13)
-	1605	-	Preliminary suction pressure fault	O					
2500	-	-	Drain sensor submergence		O				(page 14)
2502	-	-	Drain pump fault		O	O			(page 16)
2503	-	-	Drain sensor (Thd) fault		O		O		(page 18)
2600	-	-	Water leakage				O		(page 19)
2601	-	-	Water supply cutoff				O		(page 19)
3121	-	-	Out-of-range outside air temperature	O					(page 20)
3511	3611	-	Refrigerant overcooling	O					(page 21)
3512	3612	-	Locked cooling fan	O					(page 22)
4102	4152	-	Open phase	O					(page 23)
4106	-	-	Transmission power supply fault	O					(page 24)
4109	-	-	Indoor unit fan operation error		O				(page 24)
4114	-	-	Indoor unit fan motor error		O				(page 25)
4116	-	-	RPM error/Motor error		O		O		(page 25)
4121	4171	–	Function setting error	O					(page 25)
4124	-	–	Electric system not operate due to damper abnor-mality		O				(page 26)
4220 4225 4226 (Note)	4320 4325 4326 (Note)	[0]	Backup operation	O					
		[108]	Abnormal bus voltage drop	O					(page 27)
		[109]	Abnormal bus voltage rise	O					(page 29)
		[110]	BUS voltage error	O					(page 29)
		[111]	Logic error	O					(page 30)
		[112]	Logic error	O					(page 30)
		[123]	Voltage boost control error	O					(page 30)
		[129]	Control power-supply fault	O					(page 31)
		[131]	Low bus voltage at startup	O					
4230 4235 4236	4330 4335 4336	[125]	Heatsink overheat protection	O					(page 32)

Error Code	Preliminary error code	Error (preliminary) detail code	Error code definition		Searched unit: Outdoor unit	Indoor unit	BC controller	LOSSNAY	Remote controller	Notes
4230	4330	[126]	DCL temperature fault		O					(page 33)
4240 4245 4246	4340	-	Overload protection		O					(page 34)
4250 4255 4256 (Note)	4350 4355 4356 (Note)	[0]	Backup operation		O					
		[101]	IPM error		O					(page 36)
		[104]	Short-circuited IPM/Ground fault		O					(page 37)
		[105]	Overcurrent error due to short-circuited motor		O					(page 38)
		[106]	Instantaneous overcurrent (S/W detection)		O					(page 39)
		[107]	Overcurrent (effective value)(S/W detection)		O					(page 39)
		[121]	DCL overcurrent breaker error (hardware detection)		O					(page 40)
		[122]	DCL overcurrent breaker error (software detection)		O					(page 40)
4250	4350	[128]	DCL overcurrent breaker error (hardware detection)		O					(page 40)
4255 4256	4355 4356	[137]	Step-out fault		O					(page 40)
4260	-	-	Heatsink overheat protection at startup		O					(page 41)
5101	1202	-	Temperature sensor fault	Return air temperature (TH21)		O				(page 42)
				OA processing unit inlet temperature (TH4)				O		(page 42)
5102	1217	-	Temperature sensor fault	Indoor unit pipe temperature (TH22)		O				(page 42)
				OA processing unit pipe temperature (TH2)				O		(page 42)
5103	1205	00	Temperature sensor fault	Indoor unit gas-side pipe temperature (TH23)		O				(page 42)
				OA processing unit gas-side pipe temperature (TH3)				O		(page 42)
				Pipe temperature at heat exchanger outlet (TH3)	O					(page 43)
5104	1202	-	Temperature sensor fault	OA processing unit intake air temperature (TH1)				O		(page 42)
				Outside temperature (TH24)		O				(page 42) Detectable only by the All-Fresh type indoor units
				Outdoor unit discharge temperature (TH4)	O					(page 43)
5105	1204	-	Temperature sensor fault	Accumulator inlet temperature (TH5)	O					(page 43)
5107	1221	-	Temperature sensor fault	Outside temperature (TH7)	O					(page 43)

Error Code	Preliminary error code	Error (preliminary) detail code	Error code definition		Searched unit: Outdoor unit	Indoor unit	BC controller	LOSSNAY	Remote controller	Notes
5115	1203	-	Temperature sensor fault (Outdoor unit)	Compressor shell bottom temperature (TH15)	O					(page 43)
5116	1212	-	Temperature sensor fault (Outdoor unit)	Accumulator temperature (Bottom)	O					(page 43)
5117	1220	-	Temperature sensor fault (Outdoor unit)	Accumulator temperature (Middle)	O					(page 43)
5118	1214	-	Temperature sensor fault (Outdoor unit)	Accumulator temperature (High)	O					(page 43)
5110	1214	[0]	Backup operation		O					
		01, 05, 06	Temperature sensor fault	Heatsink temperature (THHS)	O					(page 45)
5111	-	-	Temperature sensor fault (BC controller)	Liquid inlet temperature (TH11)			O			(page 45)
5112	-	-	Temperature sensor fault (BC controller)	Bypass outlet temperature (TH12)			O			(page 45)
5115	-	-		LEV3 outlet temperature (TH15)			O			(page 45)
5116	-	-		LEV3 inlet temperature (TH16)			O			(page 45)
5120	1248	[0]	Backup operation		O					
		01	Temperature sensor fault	DCL(THL)	O					(page 46)
5201	-	-	High-pressure sensor fault (63HS1)		O					(page 46)
5201	1402	-	High-pressure sensor fault (Outdoor unit HPS/BC controller PS1)		O		O			(page 47)
5203	-	-	Intermediate pressure sensor fault (BC controller PS3)				O			(page 47)
5301	4300	[0]	Backup operation		O					
		[115]	ACCT sensor fault		O					(page 47)
		[117]	ACCT sensor circuit fault		O					(page 49)
		[119]	Open-circuited IPM/Loose ACCT connector		O					(page 49)
		[120]	Faulty ACCT wiring		O					(page 50)
		[127]	DCL electric current circuit error		O					(page 50)
5305 5306	4305 4306	[0]	Backup operation		O					
		[135]	Current sensor fault		O					(page 51)
		[136]	Current sensor/circuit fault		O					(page 51)
5701	-	-	Loose float switch connector			O				(page 52)
6201	-	-	Remote controller board fault (nonvolatile memory error)						O	(page 53)
6202	-	-	Remote controller board fault (clock IC error)						O	(page 53)

Error Code	Preliminary error code	Error (preliminary) detail code	Error code definition	Searched unit					Notes
				Outdoor unit	Indoor unit	BC controller	LOSSNAY	Remote controller	
6600	-	[001]	Detection of overlapped address in centralized control system	O	O	O	O	O	(page 54)
		[002]	Detection of overlapped address in indoor unit system	O	O	O	O	O	(page 54)
6601	-	[001]	Detection of polarity setting error in centralized control system			O	O	O	(page 54)
		[002]	Detection of polarity setting error in indoor unit system			O	O	O	(page 54)
6602	-	[001]	Transmission processor hardware error in centralized control system	O	O	O	O	O	(page 55)
		[002]	Transmission processor hardware error in indoor unit system	O	O	O	O	O	(page 55)
6603	-	[001]	Transmission Bus-Busy error in centralized control system	O	O	O	O	O	(page 56)
		[002]	Transmission Bus-Busy error in indoor unit system	O	O	O	O	O	(page 56)
6606	-	[003]	Communication error between device processor on circuit board and M-NET processor	O	O	O	O	O	(page 56)
6607	-	-	No ACK error	O	O	O	O	O	(page 57)
6608	-	-	No response error	O	O	O	O	O	(page 66)
6831	-	-	MA controller signal reception error (No signal reception)		O			O	(page 67)
6832	-	-	MA remote controller signal transmission error (Synchronization error)		O			O	(page 68)
6833	-	-	MA remote controller signal transmission error (H/W error)		O			O	(page 69)
6834	-	-	MA controller signal reception error (Start bit detection error)		O			O	(page 70)
6840	-	-	A control communication reception error		O				(page 71)
6841	-	-	A control communication synchronism not recover		O				(page 71)
6842	-	-	A control communication transmission/reception hardware trouble		O				(page 72)
6843	-	-	A control communication start bit detection error		O				(page 73)
6846	-	-	Start-up time over		O				(page 74)
7100	-	-	Total capacity error	O					(page 75)
7101	-	-	Capacity code setting error	O	O		O		(page 76)
7102	-	-	Wrong number of connected units	O		O			(page 77)
7105	-	-	Address setting error	O					(page 78)
7106	-	-	Attribute setting error				O		(page 78)
7107	-	-	Port setting error			O			(page 79)
7110	-	-	Connection information signal transmission/reception error	O					(page 80)
7111	-	-	Remote controller sensor fault		O		O		(page 80)
7113	-	-	Function setting error (improper connection of CN-TYP)	O		O			(page 81)

Error Code	Prelimi-nary error code	Error (prelim-inary) detail code	Error code definition	Searched unit					Notes
				Outdoor unit	Indoor unit	BC controller	LOSSNAY	Remote controller	
7117	-	-	Model setting error	O					(page 83)
7130	-	-	Incompatible unit combination	O		O			(page 84)

* If an error not listed in the error code list occurs, check the switch settings and connector connections, and then contact AC&R Systems Works.

Note

The last digit in the check error codes in the 4000's and 5000's and two-digit detail codes indicate if the codes apply to inverter on fan inverter.

Example
Code 4225 (detail code 108): Bus voltage drop in the fan inverter system
Code 4230 : Heatsink overheat protection in the inverter system

The last digit	Inverter system
0 or 1	Compressor inverter system
5 or 6	Fan inverter system

<Compressor inverter>

INV board	Outdoor units	Overload protection Imax (Arms)	Current effective value error (Arms)	Current peak value error (Apeak)	Temperature protection TOL (°C)
INV35Y	P72YNU	19	23	39	95
INV42Y	P96YNU				
INV42Y	P120YNU	27	33	56	
INV42Y	P144YNU				
INV42Y	P168YNU				
INV35Y	EP72YNU	19	23		
INV42Y	EP96YNU	27	33		
INV42Y	EP120YNU				
INV42Y	EP144YNU				
INV37YC	EP168YNU				89
INV37YC	EP192YNU				
INV37YC	EP216YNU				
INV37YC	EP240YNU				
INV38	P72TNU	35	42	71	95
INV38	P96TNU				
INV38	P120TNU	48	58	99	
INV38	P144TNU				
INV38	P168TNU	51	61	104	
INV38	EP72TNU	45	54	99	
INV38	EP96TNU	48	58		
INV38	EP120TNU	51	61	104	
INV38	EP144TNU				
INV39C	EP168TNU	48	58	99	89
INV39C	EP192TNU				
INV39C	EP216TNU				
INV39C	EP240TNU				

<Fan inverter>

INV board	Outdoor units	Overload protec-tion Imax (Arms)	Current peak value error (Apeak)
INV/S19Y	P72YNU	3.9	7
	P96YNU	4.5	8.5
	P120YNU		
	P144YNU		
	P168YNU	3.9	7
	EP72YNU		
	EP96YNU	4.5	8.5
	EP120YNU		
	EP144YNU		
	EP168YNU	3.9	7
	EP192YNU		
	EP216YNU		
	EP240YNU		
INV/S16	P72TNU	8	13.3
	P96TNU	6.5	12
	P120TNU		
	P144TNU		
	P168TNU	8	13.3
	EP72TNU		
	EP96TNU	6.5	12
	EP120TNU		
	EP144TNU		
	EP168TNU	8	13.3
	EP192TNU		
	EP216TNU		
	EP240TNU		

7-2 Error Code Definitions and Solutions: Codes [0 - 999]

7-2-1 Error Code [0403]

1. Error code definition

Serial communication error

2. Error definition and error detection method

Serial communication error between the control board and the INV board on the compressor, and between the control board and the Fan board
Detail code 1: Between the control board and the INV board
Detail code 5, 6: Between the control board and the Fan board

3. Cause, check method and remedy

(1) Faulty wiring

Check the following wiring connections.

1) Between Control board and Fan board

Control board	FAN board
CN4A	CN80
CN4B	CN80

2) Between control board and INV board

Control board	INV board
CN4	CN2

3) Between power-supply board and INV board

Power-supply board	INV board
CNINV	CN19V

4) Between power-supply board and Fan board

Power-supply board	FAN board
CNFAN1	CN81
CNFAN2	CN81

(2) PS board failure

Replace the PS board if the LED on the INV board, Fan board, or control board is not lit.
Using the detail codes, check the status of the LEDs on the circuit boards below.
Detail code 1: LED on the INV board
Detail code 5: LED on the right Fan board
Detail code 6: LED on the left Fan board
*When the power-supply board is normal, all LEDs will be lit.

(3) INV board failure, Fan board failure and Control board failure

If the problem persists after a power reset, replace the INV board, FAN board, or control board.

(4) Incorrect DIPSW setting on the Fan board

Make sure the DIPSW on the Fan board are set as follows.

- Models with a single fan
  DIPSW 1-3: ON
  (All other switches: OFF)
- Models with two fans
  DIPSW 1-3 on the right Fan board: ON (All other switches: OFF)
  DIPSW 1-4 on the left Fan board: ON (All other switches: OFF)

7-2-2 Error Code [0404]

1. Error code definition

Indoor unit control-related errors

2. Error definition and error detection method

Indoor controller board
Abnormal if data cannot be read normally from the nonvolatile memory of the indoor controller board.

3. Cause, check method and remedy

Cause	Check method and remedy
Defective indoor controller board	Replace indoor controller board.

Note: Refer also to the Service Handbook for the indoor units.

7-3 Error Code Definitions and Solutions: Codes [1000 - 1999]

7-3-1 Error Code [1102]

1. Error code definition

Discharge temperature fault

2. Error definition and error detection method

1) If the discharge temperature of 120 °C [248°F] or more is detected during the operation (the first detection), the outdoor unit stops once, turns to anti-restart mode for 3 minutes, and restarts after 3 minutes automatically.
2) If the discharge temperature of 120° C [248°F] or more is detected again (the second detection) within 5 minutes after the second stop of the outdoor unit described, the mode will be changed to 3 - minute restart mode, then the outdoor unit will restart in 3 minutes.
3) If the discharge temperature of 120°C [248°F] or more is detected (the third detection) within 5 minutes after the stop of the outdoor unit described (regardless of the first or the second stop), the outdoor unit will make an error stop, and the error code "1102" will be displayed.
4) If the discharge temperature of 120°C [248°F] or more is detected more than 5 minutes after the previous stop of the outdoor unit, the detection is regarded as the first detection, and the operation described in step 1) above will start.
5) For 5 minutes after the stop (the first stop or the second stop) of the outdoor unit, preliminary errors will be displayed on the LED display.

3. Cause, check method and remedy

Cause		Check method and remedy
(1)	Gas leak, gas shortage	Refer to the following page(s). [6-3 Evaluating and Adjusting Refrigerant Charge]
(2)	Overload operation	Check operating conditions and operation status of indoor/ outdoor units.
(3)	LEV failure on the indoor unit	Perform a heating operation and check the operation. Cooling: LEV on the indoor unit BC controller LEV1,3 SVM1,2 SVA,C Heating: LEV on the indoor unit BC controller LEV3, 4 SVB SV4a, SV4b, SV4c, SV4d Refer to the following page(s). [8-8 Troubleshooting LEV Problems]
(4)	BC controller LEV malfunction Cooling only : LEV3 Cooling main : LEV1,3 Heating only or heating main : LEV3, 4 Defrost : LEV3, 4	
(5)	BC controller SVM1 and 2 malfunction → Cooling only or defrost	
(6)	BC controller SVA malfunction → Cooling only or cooling main	
(7)	BC controller SVB malfunction → Heating only or heating main	
(8)	Actuation failure in the four-way valve (21S4a, 21S4b, or 21S4c) or the expansion valve (LEV2a, LEV2b, or LEV2c) →heating only, heating main	
(9)	Port address setting error.	Confirm the port address of the indoor unit.
(10)	Closed ball valve	Confirm that the ball valve is fully open.
(11)	Outdoor fan (including fan parts) failure, motor failure, or fan controller malfunction Rise in discharge temp. by low pressure drawing for (3) - (11).	Check the fan on the outdoor unit. Refer to the following page(s). [8-7 Troubleshooting Outdoor Unit Fan Problems]
(12)	Gas leak between low and high pressures (4-way valve failure, Compressor failure, Solenoid valve (SV1a) failure)	Perform a cooling or heating operation and check the operation.
(13)	Thermistor failure (TH4)	Refer to the following page(s). [7-7-2 Error Code [5103,5104,5105,5107,5115,5116,5117,5118]]
(14)	Input circuit failure on the controller board thermistor	Check the inlet air temperature on the LED monitor.

7-3-2 Error Code [1301]

1. Error code definition

Low pressure fault

2. Error definition and error detection method

When starting the compressor from Stop Mode for the first time if low pressure reads 0.098MPa [14psi] immediately before start-up, the operation immediately stops.

3. Cause, check method and remedy

Cause	Check method and remedy
(1) Inner pressure drop due to a leakage. (2) Low pressure sensor failure (3) Short-circuited pressure sensor cable due to torn outer rubber (4) A pin on the male connector is missing. (5) Disconnected wire (6) Failure of the low pressure input circuit on the controller board	Refer to the following page(s). [8-5-3 Comparing the Low-Pressure Sensor Measurement and Gauge Pressure]

Note

When a shut-off valve is installed as a safety measure, closing of the valve may cause this error.

7-3-3 Error Code [1302] (during operation)

1. Error code definition

High pressure fault 1 (Outdoor unit)

2. Error definition and error detection method

1) If the pressure of 3.78MPa [548psi] or higher is detected by the pressure sensor during operation (the first detection), the outdoor stops once, turns to antirestart mode for 3 minutes, and restarts after 3 minutes automatically.
2) If the pressure of 3.78MPa [548psi] or higher is detected by the pressure sensor again (the second detection) within 30 minutes after the first stop of the outdoor unit, the outdoor unit stops once, turns to anti-restart mode for 3 minutes, and restarts after 3 minutes automatically.
3) If the pressure of 3.87MPa [561psi] or higher is detected by the pressure sensor (the third detection) within 30 minutes of the second stop of the outdoor unit, the outdoor unit will make an error stop, and the error code "1302" will be displayed.
4) If the pressure of 3.78MPa [548psi] or higher is detected more than 30 minutes after the stop of the outdoor unit, the detection is regarded as the first detection, and the operation described in step 1) above will start.
5) For 30 minutes after the stop of the outdoor unit, preliminary errors will be displayed on the LED display.
6) The outdoor unit makes an error stop immediately when not only the pressure sensor but also the pressure switch detects $4.15^{+0,-0.15}$ MPa [$601^{+0,-22}$ psi]

3. Cause, check method and remedy

Cause	Check method and remedy
(1) Indoor unit LEV actuation failure (2) BC controller LEV malfunction Heating only or heating main: Indoor LEV 3, 4 Defrost: LEV3, 4 (3) BC controller SVM1 and 2 malfunction →Cooling only or defrost (4) BC controller SVA and SVC malfunction →Cooling only or cooling main (5) BC controller SVB malfunction →Heating only or heating main Solenoid valve actuation failure (SV4a, SV4b, SV4c, or SV4d) →Cooling only or cooling main (6) Actuation failure in the four-way valve (21S4a, 21S4b, or 21S4c) or the expansion valve (LEV2a, LEV2b, LEV2c, or LEV2d) →Cooling-only or cooling-main	Perform a heating operation and check the operation. Cooling: Four-way valves (21S4a, 21S4b, and 21S4c) on the outdoor unit Expansion valves (LEV2a, 2b, 2c, and 2d) LEV on the indoor unit BC controller LEV1,3, SVM1,1b,2,2b, SVA Heating: LEV on the indoor unit BC controller LEV3, SVM2,2b, SV4a,SV4b, SV4c,SV4d Refer to the following page(s). [8-8 Troubleshooting LEV Problems]
(7) Port address setting error.	Confirm the port address of the indoor unit.
(8) Refrigerant service valve actuation failure	Confirm that the refrigerant service valve is fully
(9) Short cycle on the indoor unit side (10) Clogged filter on the indoor unit (11) Reduced air flow due to dirty fan on the indoor unit fan (12) Dirty heat exchanger of the indoor unit (13) Indoor fan (including fan parts) failure or motor failure Items (7) through (12) above reduce the condensing capability of the unit, resulting in high-pressure rise during heating operation.	Check the indoor units for problems and correct them, if any.
(14) Short cycle on the outdoor unit (15) Dirty heat exchanger of the outdoor unit	Check the outdoor units for problems and correct them, if any.
(16) Outdoor fan (including fan parts) failure, motor failure, or fan controller malfunction Items (13) through (15) above reduce the condensing capability of the unit, resulting in high-pressure rise during cooling operation.	Check the fan on the outdoor unit. Refer to the following page(s). [8-7 Troubleshooting Outdoor Unit Fan Problems]
(17) Solenoid valve (SV1a) malfunction The by-pass valve (SV1a) can not control rise in high pressure.	Refer to the following page(s). [8-6 Troubleshooting Solenoid Valve Problems]
(18) Thermistor failure (TH3, TH7)	Refer to the following page(s). [7-7-2 Error Code [5103,5104,5105,5107,5115,5116,5117,5118]]
(19) Pressure sensor failure	Refer to the following page(s). [8-5-1 Comparing the High-Pressure Sensor Measurement and Gauge Pressure]
(20) Failure of the thermistor input circuit and pressure sensor input circuit on the controller board	Check the sensor temperature/pressure on the LED monitor.

(21)	Thermistor mounting problem (TH3, TH7)	Check the sensor temperature/pressure on the LED monitor.
(22)	Disconnected male connector on the pressure switch (63H1) or disconnected wire	
(23)	Open phase in the power-supply due to improper power-supply wiring	Refer to item (6) in section [6-1 Read before Test Run].

7-3-4 Error Code [1302] (at startup)

1. Error code definition

High pressure fault 2 (Outdoor unit)

2. Error definition and error detection method

If the pressure of 0.098MPa [14psi] or lower is registered on the pressure sensor immediately before start-up, it will trigger an abnormal stop, and error code "1302" will be displayed.

3. Cause, check method and remedy

Cause		Check method and remedy
(1)	Inner pressure drop due to a leakage.	Refer to the following page(s). [8-5-1 Comparing the High-Pressure Sensor Measurement and Gauge Pressure]
(2)	Pressure sensor failure	
(3)	Shorted-circuited pressure sensor cable due to torn outer rubber	
(4)	A pin on the male connector on the pressure sensor is missing or contact failure	
(5)	Disconnected pressure sensor cable	
(6)	Failure of the pressure sensor input circuit on the controller board	
(7)	Open phase in the power-supply due to improper power-supply wiring	Refer to item (6) in section [6-1 Read before Test Run].

7-3-5 Error Code [1500]

1. Error code definition

Refrigerant overcharge

2. Error definition and error detection method

An error can be detected by the shell bottom superheat (TH15 - Te).

1) If the formula "compressor bottom SH (TH15 - Te) ≤ 10ºC [18ºF]" is satisfied during operation (first detection), the outdoor unit stops, goes into the 3-minute restart mode, and starts up in three minutes.
2) If the formula "compressor bottom SH (TH15 - Te) ≤ 10ºC [18ºF]" is satisfied again within 40 minutes of the first stoppage of the outdoor unit (second detection), the unit comes to an abnormal stop, and the error code "1500" appears.
3) If the formula "compressor bottom SH (TH15 - Te) ≤ 10ºC [18ºF]" is satisfied 40 minutes or more after the first stoppage of the outdoor unit, the same sequence as Item 1) above (first detection) is followed.
4) For 40 minutes after the stop of the outdoor unit, preliminary errors will be displayed on the LED display.
5) If the formula "compressor bottom SH (TH15 - Te) ≤ 10ºC [18ºF]" is satisfied during the defrost operation and if the formula "compressor bottom SH (TH15 - Te) ≤ 10ºC [18ºF]" is also satisfied after the defrost operation, the same sequence as Item 1) above (first detection) is followed.

3. Cause, check method and remedy

Cause		Check method and remedy
(1)	Overcharged refrigerant	Refer to the following page(s). [6-3 Evaluating and Adjusting Refrigerant Charge]
(2)	Thermistor input circuit failure on the control board	Check the temperature and pressure readings on the sensor that are displayed on the LED monitor.
(3)	Faulty mounting of thermistor (TH4, TH15)	Check the temperature and pressure readings on the thermistor that are displayed on the LED monitor.

7-4 Error Code Definitions and Solutions: Codes [2000 - 2999]

7-4-1 Error Code [2500] (Models with a drain sensor)

1. Error code definition

Drain sensor submergence

2. Error definition and error detection method

1) If an immersion of the drain sensor in the water is detected while the unit is in any mode other than the Cool/Dry mode and when the drain pump goes from OFF to ON, this condition is considered preliminary water leakage. While this error is being detected, humidifier output cannot be turned on.
2) If the immersion of the sensor in the water is detected four consecutive times at an hour interval, this is considered water leakage, and "2500" appears on the monitor.
3) Detection of water leakage is also performed while the unit is stopped.
4) Preliminary water leakage is cancelled when the following conditions are met:

- One hour after the preliminary water leakage was detected, it is not detected that the drain pump goes from OFF to ON.
- The operation mode is changed to Cool/Dry.
- The liquid pipe temperature minus the inlet temperature is -10°C [-18°F] or less.

3. Cause, check method and remedy

Cause	Check method and remedy
(1) Drain water drainage problem • Clogged drain pump • Clogged drain piping • Backflow of drain water from other units	Check for proper drainage.
(2) Adhesion of water drops to the drain sensor • Trickling of water along the lead wire • Rippling of drain water caused by filter clogging	1) Check for proper lead wire installation. 2) Check for clogged filter.
(3) Failure of the relay circuit for the solenoid valve	Replace the relay.
(4) Indoor unit control board failure • Drain sensor circuit failure	If the above item checks out OK, replace the indoor unit control board.

7-4-2 Error Code [2500] (Models with a float switch)

1. Error code definition

Drain sensor submergence

2. Error definition and error detection method

1) If an immersion of the float switch in the water is detected while the unit is in any mode other than the Cool/Dry mode and when the drain pump goes from OFF to ON, this condition is considered preliminary water leakage. While this error is being detected, humidifier output cannot be turned on.
2) If the drain pump turns on within one hour after preliminary water leakage is detected and the above-mentioned condition is detected two consecutive times, water leakage error water leakage is detected, and "2500" appears on the monitor.
3) Detection of water leakage is also performed while the unit is stopped.
4) Preliminary water leakage is cancelled when the following conditions are met:

- One hour after the preliminary water leakage was detected, it is not detected that the drain pump goes from OFF to ON.
- The operation mode is changed to Cool/Dry.
- The liquid pipe temperature minus the inlet temperature is - 10°C [-18°F] or less.

3. Cause, check method and remedy

Cause	Check method and remedy
(1) Drain water drainage problem • Clogged drain pump • Clogged drain piping • Backflow of drain water from other units	Check for proper drainage.
(2) Stuck float switch Check for slime in the moving parts of the float switch.	Check for normal operation of the float switch.
(3) Float switch failure	Check the resistance with the float switch turned on and turned off.

<Reference>

Drain pump operation triggered by a submergence of the liquid level sensor (except during the Cooing/Dry mode)

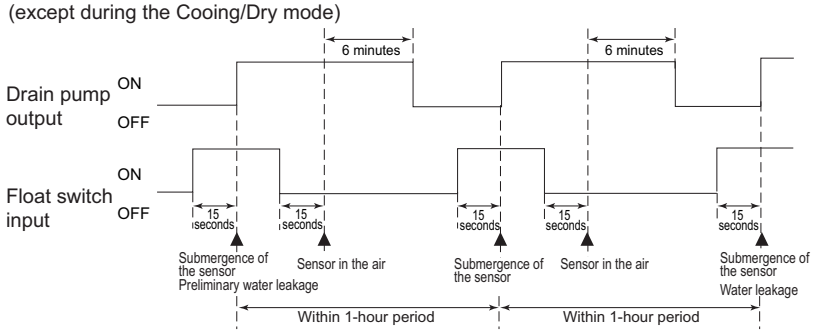

7-4-3 Error Code [2502] (Models with a drain sensor)

1. Error code definition

Drain pump fault

2. Error definition and error detection method

1) Make the drain sensor thermistor self-heat by passing current through it. If the temperature rise is small, it is interpreted that the sensor is immersed in water. This condition is considered to be a preliminary error, and the unit goes into the 3-minute restart delay mode.
2) If another episode of the above condition is detected during the preliminary error, this is considered a drain pump error, and "2502" appears on the monitor.
3) This error is always detected while the drain pump is in operation.
4) The following criteria are met when the criteria for the forced stoppage of outdoor unit (system stoppage) are met.
   ∗"Liquid pipe temperature-inlet temperature ≤ -10°C [-18°F]" has been detected for 30 minutes.
   ∗The immersion of drain sensor is detected 10 consecutive times.
   ∗The conditions that are listed under items 1) through 3) above are always met before the criteria for the forced stoppage of the outdoor unit.
5) The indoor unit that detected the conditions that are listed in item 4) above brings the outdoor unit in the same refrigerant circuit to an error stop (compressor operation prohibited), and the outdoor unit brings all the indoor units in the same refrigerant circuit that are in any mode other than Fan or Stop to an error stop. "2502" appears on the monitor of the units that came to an error stop.
6) Forced stoppage of the outdoor unit
   Detection timing: The error is detected whether the unit is in operation or stopped.
7) Ending criteria for the forced stoppage of outdoor unit
   Power reset the indoor unit that was identified as the error source and the outdoor unit that is connected to the same refrigerant circuit.
   Forced stoppage of the outdoor unit cannot be cancelled by stopping the unit via the remote controller.
   (Note) Items 1) - 3) and 4) - 7) are detected independently from each other.

Note

The address and attribute that appear on the remote controller are those of the indoor unit (or OA processing unit) that caused the error.

3. Cause, check method and remedy

Cause	Check method and remedy
(1) Drain pump failure	Check for proper functioning of the drain pump.
(2) Drain water drainage problem •Clogged drain pump •Clogged drain piping	Check for proper drainage.
(3) Adhesion of water drops to the drain sensor •Trickling of water along the lead wire •Rippling of drain water caused by filter clogging	1) Check for proper lead wire installation. 2) Check for clogged filter.
(4) Indoor unit control board failure •Drain pump drive circuit failure •Drain heater output circuit failure	If the above item checks out OK, replace the indoor unit control board.
(5) Wrong dipswitch setting on the indoor unit controller board •Dipswitch for the new indoor unit controller board was wrongly set to "unit model without drain pump" instead of "unit model with drain pump" when the board was replaced.	Check for proper dipswitch model setting on the indoor unit controller board.

7-4-4 Error Code [2502] (Models with a float switch)

1. Error code definition

Drain pump fault

2. Error definition and error detection method

1) The immersion of sensor tip in water is detected by the ON/OFF signal from the float switch.
   - ∗Submergence of the sensor
     When it is detected that the float switch has been ON for 15 seconds, it is interpreted that the sensor tip is immersed in water.
   - ∗Sensor in the air
     When it is detected that the float switch has been OFF for 15 seconds, it is interpreted that the sensor tip is not immersed in water.
2) If it is detected that the float switch has been ON for 3 minutes after the immersion of the sensor tip was detected, this is considered a drain pump failure, and "2502" appears on the monitor.
   - ∗The total time it takes for this error to be detected is 3 minutes and 15 seconds, including the time it takes for the first immersion of the sensor tip to be detected.
3) Detection of drain pump failure is performed while the unit is stopped.
4) The following criteria are met when the criteria for the forced stoppage of outdoor unit (system stoppage) are met.
   - ∗"Liquid pipe temperature-inlet temperature ≤ -10°C [-18°F]" has been detected for 30 minutes.
   - ∗It is detected by the float switch that the sensor tip has been immersed in water for 15 minutes or more.
   - ∗The conditions that are listed under items 1) through 3) above are always met before the criteria for the forced stoppage of the outdoor unit.
5) The indoor unit that detected the conditions that are listed in item 4) above brings the outdoor unit in the same refrigerant circuit to an error stop (compressor operation prohibited), and the outdoor unit brings all the indoor units in the same refrigerant circuit that are in any mode other than Fan or Stop to an error stop. "2502" appears on the monitor of the units that came to an error stop.
6) Forced stoppage of the outdoor unit
   Detection timing: The error is detected whether the unit is in operation or stopped.
7) Ending criteria for the forced stoppage of outdoor unit
   Power reset the indoor unit that was identified as the error source and the outdoor unit that is connected to the same refrigerant circuit.
   Forced stoppage of the outdoor unit cannot be cancelled by stopping the unit via the remote controller.
   (Note) Items 1) - 3) and 4) - 7) are detected independently from each other.

Note

The address and attribute that appear on the remote controller are those of the indoor unit (or OA processing unit) that caused the error.

3. Cause, check method and remedy

Cause	Check method and remedy
(1) Drain pump failure	Check for proper functioning of the drain pump mechanism
(2) Drain water drainage problem •Clogged drain pump •Clogged drain piping	Check for proper drainage.
(3) Stuck float switch Check for slime in the moving parts of the float switch.	Check for normal operation of the float switch.
(4) Float switch failure	Check the resistance with the float switch turned on and turned off.
(5) Indoor unit control board failure •Drain pump drive circuit failure •Float switch input circuit failure	Replace indoor unit control board.
(6) Wrong dipswitch setting on the indoor unit controller board •Dipswitch for the new indoor unit controller board was wrongly set to "unit model without drain pump" instead of "unit model with drain pump" when the board was replaced.	Check for proper dipswitch model setting on the indoor unit controller board.

7-4-5 Error Code [2503]

1. Error code definition

Drain sensor (Thd) fault

2. Error definition and error detection method

- If the open or short circuit of the thermistor has been detected for 30 seconds, this condition is considered to be a preliminary error, and the unit goes into the 3-minute restart delay mode.
- If another episode of the above condition is detected during the preliminary error, this is considered a drain sensor error.(If the short or open circuit of the thermistor is no longer detected, normal operation will be restored in 3 minutes.)
- This error is detected when one of the following conditions are met.
  - ∗During Cool/Dry operation
  - ∗Liquid pipe temperature minus inlet temperature is equal to or smaller than -10°C [-18°F] (except during the defrost cycle)
  - ∗When the liquid temperature thermistor or suction temperature thermistor or short or open circuited.
  - ∗Drain pump is in operation.
  - ∗One hour has elapsed since the drain sensor went off.

    Short: 90°C [194 °F] or above
    Open: - 20°C [-4 °F] or below

3. Cause, check method and remedy

Cause	Check method and remedy
(1) Faulty connector (CN31) insertion.	1) Check for connector connection failure. Reinsert the connector, restart the operation, and check for proper operation.
(2) Broken or semi-broken thermistor wire	2) Check for a broken thermistor wire.
(3) Thermistor failure	3) Check the resistance of the thermistor. 0°C[32 °F]:6.0 kΩ 10°C[50 °F]:3.9 kΩ 20°C[68°F]:2.6 kΩ 30°C[86°F]:1.8 kΩ 40°C[104 °F]:1.3 kΩ
(4) Indoor unit control board (error detection circuit) failure	4) Replace the indoor unit control board if the problem recurs when the unit is operated with the No.-1 and No.-2 pins on the drain sensor connector (CN31) being short-circuited. If the above item checks out OK, there are no problems with the drain sensor. Turn off the power and turn it back on.

7-4-6 Error Code [2600]

1. Error code definition

Water leakage

2. Cause, check method and remedy

Check that water does not leak from the pipes in such as the humidifier.

7-4-7 Error Code [2601]

1. Error code definition

Water supply cutoff

2. Cause, check method and remedy

Cause	Check method and remedy
(1) The water tank of the humidifier is empty.	Check the amount of supply water. Check for the solenoid valve and for the connection.
(2) The solenoid valve for humidification is OFF.	Check the connector.
(3) Disconnected float switch	Check the connecting part.
(4) Poor operation of float switch	Check for the float switch.
(5) Frozen water tank	Turn off the power source of the water tank to defrost, and turn it on again.

7-5 Error Code Definitions and Solutions: Codes [3000 - 3999]

7-5-1 Error Code [3121]

1. Error code definition

Out-of-range outside air temperature

2. Error definition and error detection method

- When the thermistor temperature of -33°C[-27°F] or below has continuously been detected for 3 minutes during heating operation (during compressor operation), the unit makes an error stop and "3121" appears on the display. (Use the OC thermistor temperature to determine when two outdoor units are in operation.)
- The compressor restarts when the thermistor temperature is -31°C[-24°F] or above (both OC and OS) during error stop. (The error display needs to be canceled by setting the remote controller.)
- Outdoor temperature error is canceled if the units stop during error stop. (The error display needs to be canceled by setting the remote controller.)

3. Cause, check method and remedy

Check the following factors if an error is detected, without drop in the outdoor temperature.

Cause	Check method and remedy
(1) Thermistor failure	Check thermistor resistance.
(2) Pinched lead wire	Check for pinched lead wire.
(3) Torn wire coating	Check for wire coating.
(4) A pin on the male connector is missing or contact failure	Check connector.
(5) Disconnected wire	Check for wire.
(6) Thermistor input circuit failure on the control board	Check the intake temperature of the sensor with the LED monitor. When the temperature is far different from the actual temperature, replace the control board.

<Reference>

	Short detection	Open detection
TH7	110 ℃ [230 ˚F] and above (0.4 kΩ)	-40 ˚C [-40 ˚F] and below (130 kΩ)

7-5-2 Error Code [3511]

1. Error code definition

Refrigerant overcooling

2. Error definition and error detection method

1) If the condition "THHS ≤ A*1 °C remains true for continuous 6 minutes and 30 seconds" is met (for the first time) during operation, the outdoor unit will stop, go into the three-minute restart delay mode, and then automatically resume operation after three minutes have passed.
2) If the condition "THHS ≤ A*1 °C remains true for continuous 6 minutes and 30 seconds" is met again (for the second time) within 30 minutes of the first stoppage of the outdoor unit explained above, the outdoor unit will stop, go into the three-minute restart delay mode, and then automatically resume operation after three minutes have passed.
3) If the condition "THHS ≤ A*1 °C remains true for continuous 6 minutes and 30 seconds" is met again (for the third time) within 30 minutes of the second stoppage of the outdoor unit explained above and before the condition "THHS > A*1 °C remains true for continuous 2 minutes" has been met, the unit will come to an abnormal stop, and this error will be indicated as "3511."
4) If the condition "THHS ≤ A*1 °C remains true for continuous 6 minutes and 30 seconds" is met (regardless of the first or second time) after 30 minutes of the first occurrence or after the condition "THHS > A*1 °C remains true for continuous 2 minutes" has been met, it is considered as the first occurrence, and the unit will follow the same behavior as the one described in item 1) above.
5) For 30 minutes after the stoppage of the outdoor unit, or the period up to the time when the condition "THHS > A*1 °C remains true for continuous 2 minutes" has been met is considered as a preliminary error, and this state will be indicated on the LED.

*1 During cooling: A = Outside temperature TH7; During heating: A = Evaporation temperature Te

3. Cause, check method and remedy

Cause	Check method and remedy
(1) Outdoor unit LEV9 malfunction	Check the operation of unit in the Cooing or in the Heating mode. LEV9 Refer to [8-8 Troubleshooting LEV Problems].
(2) THHS failure	1) Check the IGBT on the INV board for proper mounting. 2) Check the THHS sensor reading on the LED. → Replace the INV board if the THHS value is abnormal.
(3) Thermistor failure (TH7)	Resistance value of the thermistor
(4) Low-pressure sensor fault	Refer to [8-5 Pressure Sensor Circuit Configuration and Troubleshooting Pressure Sensor Problems]

7-5-3 Error Code [3512]

1. Error code definition

Cooling fan locking

2. Error definition and error detection method

♦The motor on the cooling fan locks during operation.

3. Cause, check method and remedy

Cause	Check method and remedy
(1) Locked cooling fan motor	Check the fan blades for objects obstructing the rotation of the cooling fan.
(2) Cooling fan motor trouble	Disconnect the wiring from the cooling fan motor, and check the insulation resistance and the coil resistance of the motor. Replace the motor if problems are found. Criteria for insulation failure: Insulation failure if below 1 MΩ Wire disconnection: Normal if coil resistance is between 56 and 65 Ω
(3) Contact failure	Check the wiring between CN101 and CN63PW. Check the wiring between CN24V and RY24V. Check the RY24V terminal block for problems.
(4) Circuit board fault	If no problems are found with the items above, replace the control board and the PS board.

7-6 Error Code Definitions and Solutions: Codes [4000 - 4999]

7-6-1 Error Code [4102]

1. Error code definition

Open phase

2. Error definition and error detection method

- An open phase of the power supply was detected at power on.

Note

The open phase of the power supply may not always be detected if a power voltage from another circuit is applied.

3. Cause, check method and remedy

Cause	Check method and remedy
(1) Power supply problem ・Open phase voltage of the power supply ・Power supply voltage drop	・Check the input voltage to the power supply terminal block TB1. ・Possible open phase in the power-supply due to improper power-supply wiring. (Refer to item (6) in section [6-1 Read before Test Run].)
(2) Noise filter problem ・Coil problem ・Circuit board failure	・Check the coil connections. ・Check for coil burnout.
(3) Wiring failure	[TNU models] Check the wiring between CN13 on the noise filter and CNAC on the control board. Check the wiring between CN11 on the noise filter and CN110 on the control board. [YNU models] Confirm that the voltage at the control board connector CNAC is 190 V or above. If the voltage is below 190, check the wiring between each of the following. TB21/TB22/TB23 of the noise filter - CN2 of the noise filter - Transformer Box - CNAC of the control board.
(4) Blown fuse	[TNU models] Check that F001 on the control board is not blown. →If a blown fuse is found, check for a short-circuiting or earth fault of the actuator. Check noise filter fuses F001 and F002. →If a blown fuse is found, check for a short-circuiting or earth fault of the actuator. [YNU models] Check the fuse F001 on the control board and the fuses F4 and F5 next to the power-supply terminal block for a blown fuse. →If a blown fuse is found, check for a short-circuiting or earth fault of the actuator.
(5) Control board failure	Replace the control board if none of the above is causing the problem.

7-6-2 Error Code [4106]

1. Error code definition

<Transmission power supply fault Error detail code FF (Outdoor unit)>

2. Error definition and error detection method

Transmission power output failure

3. Cause

1) Wiring failure
2) Transmission power supply cannot output voltage because overcurrent was detected.
3) Voltage cannot be output due to transmission power supply problem.
4) Transmission voltage detection circuit failure

4. Check method and remedy

Check the transmission power supply circuit on all outdoor units in a given refrigerant circuit for problems. [8-11-2 Trouble-shooting Problems with Outdoor Unit Transmission Power Supply Circuit]

1. Error code definition

<Transmission power supply fault other than error detail code FF (Outdoor unit)>

2.Error definition and error detection method

Transmission power reception failure

3.Cause

One of the outdoor units stopped supplying power, but no other outdoor units start supplying power.

4.Check method and remedy

Check the transmission power supply circuit on all outdoor units in a given refrigerant circuit for problems. [8-11-2 Trouble-shooting Problems with Outdoor Unit Transmission Power Supply Circuit]

7-6-3 Error Code [4109]

1. Error code definition

Indoor unit fan operation error

2. Error definition and error detection method

1) Connector CN28 has remained open-circuited for 100 consecutive secondsduring operation.

3. Cause, check method and remedy

Cause	Check method and remedy
(1) Auxiliary relay fault	The coil or the wiring of the auxiliary relay connected to CN28 is faulty.
(2) Connector (CN28) is disconnected.	Check the connector for proper connection.
(3) Blown fuse	Check the fuse on the control circuit board.
(4) Motor error (thermistor error inside the motor)	Check the unit fan for proper operation in the test run mode. If no problems are found with items 1 through 3 above and the fan does not operate, replace the motor.

7-6-4 Error Code [4114]

1. Error code definition

Indoor unit fan motor error

2. Error definition and error detection method

When the fan motor output from the indoor unit circuit board is ON and when the rotation speed input from the fan motor cannot be detected for 30 seconds or more

3. Cause, check method and remedy

Cause	Check method and remedy
(1) Fan motor connector contact failure	Check the fan motor connector CNMF for proper connection.
(2) Contact failure of the relay connector for the fan motor	Check the relay connector for the fan motor for proper connection.
(3) Indoor unit circuit board failure	Remove the fan motor connector CNMF and check the voltage at the indoor unit circuit board. Testing point 1. 280 VDC (Between CNMF1 (+) and CNMF4 (-)) 2. 15 VDC (Between CNMF5 (+) and CNMF4 (-)) Replace the indoor unit circuit board if the voltage is abnormal. If the 4114 error persists after the indoor unit circuit board is replaced, replace the fan motor as well.
(4) Fan motor fault	Replace the fan motor if the voltage is normal in step (3) above. If the 4114 error persists after the fan motor is replaced, replace the indoor unit circuit board as well.

7-6-5 Error Code [4116]

1. Error code definition

RPM error/Motor error

2. Error definition and error detection method

♦LOSSNAY

∗The motor keep running even if the power is OFF.

∗The thermal overload relay is ON. (Only for the three-phase model)

♦Indoor unit

If detected less than 180rpm or more than 2000rpm, the indoor unit will restart and keep running for 3 minutes.If detected again, the display will appear.

3. Cause, check method and remedy

Cause	Check method and remedy
(1) Board failure	Replace the board.
(2) Motor malfunction	Check for the motor and the solenoid switch.
(3) Solenoid switch malfunction	

7-6-6 Error Code [4121]

1. Error code definition

Function setting error

2. Error source, cause, check method and remedy

Error source	Cause	Check method and remedy
Outdoor unit	(1) Dip switch setting error on the control board	Check the SW6-1 setting on the control board
	(2) Connector connection error on the control board	Check that nothing is connected to the connector CNAF on the control board.
	(3) Control board failure	Replace the control board if no problems are found with the two items above.

7-6-7 Error Code [4124]

1. Error code definition

Electric system not operate due to damper abnormality

2. Error definition and error detection method

When the damper is not located at the designated position.

3. Cause, check method and remedy

When the damper is not located at the designated position.

1) Check there is something that interferes the opening or closing movement of the damper.
2) If damper does not open or close, turn OFF the power supply and measure the resistance of the damper lock motors (ML1, ML2) and the damper motor (MV2).
   The resistance value is normal each. →Replace the indoor electronic control P.C. board.
   The resistance value is not normal each. →Replace the motor that indicates the abnormal value.

<table>
<tr><th>Part name</th><th>Check method and criteria</th><th>Figure</th></tr>
<tr><td>Damper lock motor Right(ML1)</td><td rowspan="2">Measure the resistance between the terminals with a tester.
(Part temperature: 10°C ~ 30°C)
<table><tr><th>Color of the lead wire</th><th>Normal</th></tr><tr><td>BRN-other one</td><td>235Ω~255Ω</td></tr></table></td><td rowspan="3"> 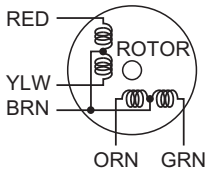
</td></tr>
<tr><td>Damper lock motor Left(ML2)</td></tr>
<tr><td>Damper motor (MV2)</td><td>Measure the resistance between the terminals with a tester.
(Part temperature: 10°C ~ 30°C)
<table><tr><th>Color of the lead wire</th><th>Normal</th></tr><tr><td>BRN-other one</td><td>282Ω~306Ω</td></tr></table></td></tr>
</table>

3) If damper opens or closes, measure the voltage between CN1X1 (+) and (-) and the voltage between CN1Y1 (+) and (-) during the damper open by pressing VANE CONTROL button.
   There is not 0V DC between CN1X1 (+) and (-). →Replace the damper limit switch (open)
   There is not 5V DC between CN1X1 (+) and (-). →Replace the damper limit switch (close)
4) If damper opens or closes and voltages in 3) are normal, measure the voltage between CN1X1 (+) and (-) and the voltage between CN1Y1 (+) and (-) during the damper close by pressing VANE CONTROL button.
   There is not 5V DC between CN1X1 (+) and (-). →Replace the damper limit switch (open)
   There is not 0V DC between CN1X1 (+) and (-). →Replace the damper limit switch (close)
   There is 5V DC between CN1X1 (+) and (-) and 0V DC between CN1X1 (+) and (-). →Replace the indoor electronic control P.C. board.

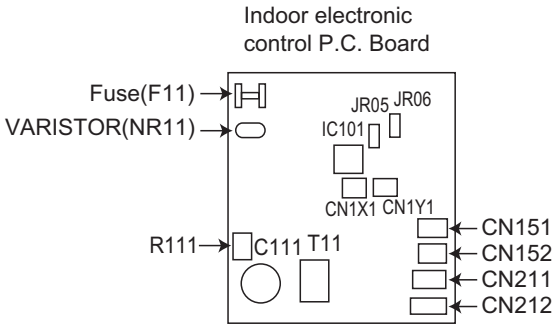

Note: Refer also to the Service Handbook for the indoor units.

7-6-8 Error Code [4220, 4225, 4226] Detail Code 108

1. Error code definition

Abnormal bus voltage drop (Detail code 108) (YNU)

2. Error definition and error detection method

If Vdc 289V or less is detected during Inverter operation. (S/W detection)

3. Cause, check method and remedy

(1) Power supply environment

Check the power-supply wiring for an open phase. Refer to item (6) in section [6-1 Read before Test Run].
Find out if there was a (momentary) power failure.
Check whether the power voltage (Between L1 and L2, L2 and L3, and L1 and L3) is 414 V or less across all phases.

(2) Voltage drop detected

4220

INV35Y, INV42Y, and INV37YC

- Check the voltage at relay connector RYPN while the inverter is stopped.

If the voltage is 420 V or above, check the following items.

1) Check the LED monitor to see if the bus voltage is above 289 V, and replace the inverter board if it is 289 V or below.
2) Check the coil (L) connections and for broken wiring.
3) Check the wiring connections between noise filter board and INV board.
4) If the problem persists after reboot, replace the INV board.

If the voltage is below 420 V, check the following items.

1) Check the coil (L) connections and for broken wiring.
2) Check the wiring connections between noise filter board and INV board and between INV board and R1 through R5.
3) Check the in-rush current resistor. Refer to the following page(s). [8-10-14 Simple Check on Inverter Circuit Components]
4) If the problem persists after reboot, replace the INV board.

4225, 4226

- Check the voltage at relay connector RYPN while the inverter is stopped. If the voltage is below 420 V, check the following items.

1) Check for proper connections of noise filter coil and DC reactor, and for broken wiring.
2) Check the wiring connections between INV board and FAN board.
3) Check item for 4220

   Replace the FAN board if no problems are found.

- Check the voltage at connector RYPN while the inverter is stopped. If the voltage is 420 V or above, check the following items.

1) Check the state of the wiring connections between the INV board and the Fan board.
2) Check contents 4220

   Replace the Fan board if no problems are found.

(3) Control board failure

Check that 12VDC is applied to connector CN72 on the control board while the inverter is operating. If voltage is absent or the wrong voltage is applied, check the fuse F01. Replace the control board if no problems are found with the fuse.

Note

For inverter-related error codes, refer to the following page(s). [8-10 Troubleshooting Inverter Problems]

7-6-9 Error Code [4220, 4225, 4226] Detail Code 108

1. Error code definition

Abnormal bus voltage drop (Detail code 108) (TNU)

2. Error definition and error detection method

If Vdc 160V or less is detected during Inverter operation. (S/W detection)

3. Cause, check method and remedy

(1) Power supply environment

Check the power-supply wiring for an open phase. Refer to item (6) in section [6-1 Read before Test Run].
Find out if there was a (momentary) power failure.
Check whether the power voltage (Between L1 and L2, L2 and L3, and L1 and L3) is 188 V or less across all phases.

(2) Voltage drop detected

4220

INV39C

- Check the voltage at relay connector RYPN while the inverter is stopped.

If the voltage is 253 V or above, check the following items.

1) Check the LED monitor to see if the bus voltage is above 160 V, and replace the inverter board if it is 160 V or below.
2) Check the coil (L) connections and for broken wiring.
3) Check the wiring connections between noise filter board and INV board.
4) If the problem persists after reboot, replace the INV board.

If the voltage is below 253 V, check the following items.

1) Check the coil (L) connections and for broken wiring.
2) Check the wiring connections between noise filter board and INV board and between INV board and R1.
3) Check the in-rush current resistor. Refer to the following page(s). [8-10-14 Simple Check on Inverter Circuit Components]
4) If the problem persists after reboot, replace the INV board.

INV38

- Check the voltage at relay connector RYPN while the inverter is stopped.

If the voltage is 253 V or above, check the following items.

1) Check the LED monitor to see if the bus voltage is above 160 V, and replace the inverter board if it is 160 V or below.
2) Check the coil (L) connections and for broken wiring.
3) Check the wiring connections between noise filter board and INV board and between INV board and capacitor board.
4) If the problem persists after reboot, replace the INV board.

If the voltage is below 253 V, check the following items.

1) Check the coil (L) connections and for broken wiring.
2) Check the wiring connections between noise filter board and INV board, between INV board and capacitor board, and between INV board and R1.
3) Check the in-rush current resistor. Refer to the following page(s). [8-10-14 Simple Check on Inverter Circuit Components]
4) If the problem persists after reboot, replace the INV board.

4225, 4226

- Check the voltage at relay connector RYPN while the inverter is stopped. If the voltage is below 420 V, check the following items.

1) Check for proper connections of noise filter coil and DC reactor, and for broken wiring.
2) Check the wiring connections between INV board and FAN board.
3) Check item for 4220

   Replace the FAN board if no problems are found.

- Check the voltage at connector RYPN while the inverter is stopped. If the voltage is 420 V or above, check the following items.

1) Check the state of the wiring connections between the INV board and the Fan board.
2) Check contents 4220

   Replace the Fan board if no problems are found.

(3) Control board failure

Check that 12VDC is applied to connector CN72 on the control board while the inverter is operating. If voltage is absent or the wrong voltage is applied, check the fuse F01. Replace the control board if no problems are found with the fuse.

Note

For inverter-related error codes, refer to the following page(s). [8-10 Troubleshooting Inverter Problems]

7-6-10 Error Code [4220, 4225, 4226] Detail Code 109

1. Error code definition

Abnormal bus voltage rise (Detail code 109)

2. Error definition and error detection method

If Vdc ≥830V is detected during inverter operation. (YNU)
If Vdc ≥400V is detected during inverter operation. (TNU)

3. Cause, check method and remedy

(1) Different voltage connection

Check the power supply voltage on the power supply terminal block (TB1).

(2) INV board failure

If the problem recurs, replace the INV board or fan board.
In the case of 4220: INV board
In the case of 4225 and 4226: Fan board

Note

For inverter-related error codes, refer to the following page(s). [8-10 Troubleshooting Inverter Problems]

7-6-11 Error Code [4220] Detail Code 110

1. Error code definition

VDC error (Detail code 110)

2. Error definition and error detection method

BUS voltage error When Vdc is equal to or greater than 814 volts (hardware detection) (YNU)
BUS voltage error When Vdc is equal to or greater than 407 volts (hardware detection) (TNU)

3. Cause, check method and remedy

Details of 4220 error: See No. 108 and 109.
Also see error details No. 129 of 4220 error (applicable to INV37YC and INV39C only).

Note

For inverter-related error codes, refer to the following page(s). [8-10 Troubleshooting Inverter Problems]

7-6-12 Error Code [4220, 4225, 4226] Detail Code 111, 112

1. Error code definition

Logic error (Detail code 111, 112)

2. Error definition and error detection method

Hardware error
If only the hardware error logic circuit operates, and no identifiable error is detected.

3. Cause, Check method and remedy

In the case of 4220

Cause	Check method and remedy
(1) External noise	Refer to the following page(s). [8-10-2 Checking the Inverter Board Error Detection Circuit]
(2) INV board failure	

In the case of 4225 and 4226

Cause	Check method and remedy
(1) External noise	Refer to the following page(s). [8-10-8 Checking the Fan Board Error Detection Circuit at No Load] [8-10-9 Checking the Fan Board for Damage at No Load] [8-10-10 Checking the Fan Board for Damage with Load]
(2) Fan board failure	

Note

For inverter-related error codes, refer to the following page(s). [8-10 Troubleshooting Inverter Problems]

7-6-13 Error Code [4220] Detail Code 123

1. Error code definition

Voltage boost control error (Detail code 123)(outdoor unit)

2. Error definition and error detection method

When a drop in power supply voltage or a malfunction in the booster circuit is detected

3. Cause, check method and remedy

Cause	Check method and remedy
(1) Inverter-output-related items	Refer to the following page(s). [8-10-2 Checking the Inverter Board Error Detection Circuit] Refer to the following page(s). [8-10-3 Checking the Compressor for Ground Fault and Coil Resistance Problems] Refer to the following page(s). [8-10-4 Checking the Inverter for Damage at No-Load] Refer to the following page(s). [8-10-5 Checking the Inverter for Damage during Compressor Operation] Refer to the following page(s). [8-10-11 Checking the Installation Conditions]

Note

For inverter-related error codes, refer to the following page(s). [8-10 Troubleshooting Inverter Problems]

7-6-14 Error Code [4220] Detail Code 129

1. Error code definition

Control power supply error (Detail code 129)(outdoor unit)

2. Error definition and error detection method

INV35Y, INV42Y, and INV38
Detection of insufficient drive voltage for relays on INV board

INV37YC and INV39C
Detection of insufficient drive voltage for relays on INV board or for IGBT

3. Cause, check method and remedy

Cause	Check method and remedy
(1) Contact failure	<INV35Y, INV42Y, and INV38> Check the connectors CNRY on INV board and CNRYA on MAIN board for proper connections. <INV37YC> Check the connectors CNRY on INV board and CNRYA on MAIN board for proper connections. Check the connectors CN200 on INV board and CN300 on PS board for proper connections. <INV39C> Check the connectors CNRY and CNRY2 on INV board and CNRYA on MAIN board for proper connections.
(2) Voltage check	Disconnect the connector CNRYA from the control board and check the voltage at the connector CNRYA. If a voltage of 13 V is not output, replace the control board and the PS board.
(3) Inverter board failure	If the problem persists after reboot, replace the INV board.

Note

For inverter-related error codes, refer to the following page(s). [8-10 Troubleshooting Inverter Problems]

7-6-15 Error Code [4220, 4225, 4226] Detail Code 131

1. Error code definition

Low bus voltage at startup (Detail code 131) (YNU)

2. Error definition and error detection method

When Vdc ≤289 V is detected just before the inverter operation. (YNU)

3. Cause, check method and remedy

(1) Inverter main circuit failure

Same as detail code 108 of 4220 error

Note

For inverter-related error codes, refer to the following page(s). [8-10 Troubleshooting Inverter Problems]

7-6-16 Error Code [4220, 4225, 4226] Detail Code 131

1. Error code definition

Low bus voltage at startup (Detail code 131) (TNU)

2. Error definition and error detection method

When Vdc ≦160 V is detected just before the inverter operation. (TNU)

3. Cause, check method and remedy

(1) Inverter main circuit failure

Same as detail code 108 of 4220 error

Note

For inverter-related error codes, refer to the following page(s). [8-10 Troubleshooting Inverter Problems]

7-6-17 Error Code [4230] Detail Code 125

1. Error code definition

Heatsink overheat protection (Detail code 125)

2. Error definition and error detection method

When the heat sink temperature (THHS) remains at or above TOH is detected.

models	TOH
INV35Y, INV42Y, INV38	100°C
INV37YC	94°C
INV39C	98°C

3. Cause, check method and remedy

Cause	Check method and remedy
(1) Fan board failure	Refer to the following page(s). [8-10-8 Checking the Fan Board Error Detection Circuit at No Load] [8-10-9 Checking the Fan Board for Damage at No Load] [8-10-10 Checking the Fan Board for Damage with Load]
(2) THHS failure	1) Check for proper installation of the INV board and FAN board IGBT. (Check for proper installation of the IGBT heatsink.) 2) Check the THHS sensor reading on the LED monitor. →If an abnormal value appears, replace the INV board.
(3) Outdoor unit LEV9 malfunction	Check the operation of the unit in the Cooing or in the Heating mode. LEV9 Refer to the following page(s). [8-8 Troubleshooting LEV Problems]
(4) Low-pressure sensor fault	Refer to the following page(s). [8-5 Pressure Sensor Circuit Configuration and Troubleshooting Pressure Sensor Problems]

Note

For inverter-related error codes, refer to the following page(s). [8-10 Troubleshooting Inverter Problems]

7-6-18 Error Code [4235, 4236] Detail Code 125

1. Error code definition

Heatsink overheat protection (Detail code 125) (outdoor unit)

2. Error definition and error detection method

Detection of fan INV heatsink temperature (THHS) ≥ 100°C

3. Cause, check method and remedy

Cause	Check method and remedy
(1) FAN board fault	Refer to the following page(s). [8-10-8 Checking the Fan Board Error Detection Circuit at No Load] [8-10-9 Checking the Fan Board for Damage at No Load] [8-10-10 Checking the Fan Board for Damage with Load]
(2) Outdoor unit fan failure	1) Check the outdoor unit fan for proper operation. Check the fan motor if problems are found with the operation of the fan. Refer to the following page(s). [8-10-7 Checking the Fan Motor for Ground Fault and Coil Resistance Problems]
(3) Air passage blockage	1) Check the heatsink and the duct for blockage. Refer to the following page(s). [8-10-16 Checking the Fan Inverter Heatsink for Clogging]
(4) THHS failure	1) Check the IGBT heatsink for proper mounting. 2) Check the THHS sensor reading on the LED. → Replace the INV board if the THHS value is abnormal.

Note

For inverter-related error codes, refer to the following page(s). [8-10 Troubleshooting Inverter Problems]

7-6-19 Error Code [4230] Detail Code 126

1. Error code definition

DCL temperature fault (Detail code 126)(outdoor unit)

2. Error definition and error detection method

When DCL temperature that equals or exceeds 150˚C is detected (applicable to INV37YC and INV39C)

3. Cause, check method and remedy

Cause	Check method and remedy
(1) Contact failure	Check the connector CNTH on the INV board for proper connection.
(2) DCL temperature sensor fault	Disconnect the connector (CNTH), and measure the resistance of the DCL temperature sensor. Replace the DCL temperature sensor if the value is abnormal. Refer to [3-3 Functions of the Major Components of Outdoor Unit].
(3) INV board failure	Replace the INV board if the problem persists after the operation is resumed.

Note

For inverter-related error codes, refer to the following page(s). [8-10 Troubleshooting Inverter Problems]

7-6-20 Error Code [4240, 4245, 4246]

1. Error code definition

Overload protection (YNU)

2. Error definition and error detection method

If the output current of "(Iac) >Imax (Arms)" or "THHS > TOL" is continuously detected for 10 minutes during inverter operation.
Refer to the following page(s). [7-1 Error Code and Preliminary Error Code Lists]

3. Cause, check method and remedy

Cause	Check method and remedy
(1) IPM contact failure	Check the IPM and cooling plate for proper contact. (Remove the inverter board, and check the IPM heatsink grease.)
(2) Air passage blockage	Check that the heat sink cooling air passage is not blocked
(3) Power supply environment	Power supply voltage is 414 V or above.
(4) Inverter, FAN board failure	Refer to the following page(s). [8-10 Troubleshooting Inverter Problems]
(5) Compressor failure	Check that the compressor has not overheated during operation. → Check the refrigerant circuit (oil return section). Refer to the following page(s). [8-10-3 Checking the Compressor for Ground Fault and Coil Resistance Problems]
(6) The model selection switches (SW5-3 - 5-8) on the outdoor unit are set incorrectly.	Check the setting for the model selection switch on the outdoor unit (Dipswitches SW5-3 - 5-8 on the outdoor unit control board). For switch settings, refer to the following page(s). [7-9-2 Error Code [7101]]

Note

For inverter-related error codes, refer to the following page(s). [8-10 Troubleshooting Inverter Problems]

7-6-21 Error Code [4240, 4245, 4246]

1. Error code definition

Overload protection (TNU)

2. Error definition and error detection method

If the output current of "(Iac) >Imax (Arms)" or "THHS > TOL" is continuously detected for 10 minutes during inverter operation.
Refer to the following page(s). [7-1 Error Code and Preliminary Error Code Lists]

3. Cause, check method and remedy

Cause	Check method and remedy
(1) IPM contact failure	Check the IPM and cooling plate for proper contact. (Remove the inverter board, and check the IPM heatsink grease.)
(2) Air passage blockage	Check that the heat sink cooling air passage is not blocked
(3) Power supply environment	Power supply voltage is 188 V or above.
(4) Inverter, FAN board failure	Refer to the following page(s). [8-10 Troubleshooting Inverter Problems]
(5) Compressor failure	Check that the compressor has not overheated during operation. → Check the refrigerant circuit (oil return section). Refer to the following page(s). [8-10-3 Checking the Compressor for Ground Fault and Coil Resistance Problems]
(6) The model selection switches (SW5-3 - 5-8) on the outdoor unit are set incorrectly.	Check the setting for the model selection switch on the outdoor unit (Dipswitches SW5-3 - 5-8 on the outdoor unit control board). For switch settings, refer to the following page(s). [7-9-2 Error Code [7101]]

Note

For inverter-related error codes, refer to the following page(s). [8-10 Troubleshooting Inverter Problems]

7-6-22 Error Code [4250, 4255, 4256] Detail Code 101

1. Error code definition

IPM error (Detail code 101)

2. Error definition and error detection method

In the case of 4250

If an overcurrent is detected by the overcurrent detection circuit (INV35Y: CT003, INV42Y: R100, INV37YC: R127, INV38(CT001), INV39C(CT-3)) on the INV board.

In the case of 4255 and 4256

IPM error signal is detected.

3. Cause, check method and remedy

In the case of 4250

Cause	Check method and remedy
(1) Inverter output related	Refer to the following page(s). [8-10-2 Checking the Inverter Board Error Detection Circuit] [8-10-3 Checking the Compressor for Ground Fault and Coil Resistance Problems] [8-10-4 Checking the Inverter for Damage at No-Load] [8-10-5 Checking the Inverter for Damage during Compressor Operation] [8-10-11 Checking the Installation Conditions] Check the IGBT module resistance value of the INV board, if no problems are found. [8-10-15 Troubleshooting Problems with IGBT Module]
(2) The model selection switches (SW5-3 - 5-8) on the outdoor unit are set incorrectly.	Check the setting for the model selection switch on the outdoor unit (Dipswitches SW5-3 - 5-8 on the outdoor unit control board). For switch settings, refer to the following page(s). [7-9-2 Error Code [7101]]
(3) Open phase in the power-supply due to improper power-supply wiring.	Refer to item (6) in section [6-1 Read before Test Run].

In the case of 4255 and 4256

Cause	Check method and remedy
(1) Fan motor abnormality	Refer to the following page(s). [8-10-7 Checking the Fan Motor for Ground Fault and Coil Resistance Problems]
(2) Fan board failure	Refer to the following page(s). [8-10-8 Checking the Fan Board Error Detection Circuit at No Load] [8-10-9 Checking the Fan Board for Damage at No Load] [8-10-10 Checking the Fan Board for Damage with Load]

Note

For inverter-related error codes, refer to the following page(s). [8-10 Troubleshooting Inverter Problems]

7-6-23 Error Code [4250, 4255, 4256] Detail Code 104

1. Error code definition

Short-circuited IPM/Ground fault (Detail code 104)

2. Error definition and error detection method

When IPM/IGBT short damage or grounding on the load side is detected just before starting the inverter.

3. Cause, check method and remedy

In the case of 4250

Cause	Check method and remedy
(1) Grounding fault compressor	Refer to the following page(s). [8-10-3 Checking the Compressor for Ground Fault and Coil Resistance Problems]
(2) Inverter output related	Refer to the following page(s). [8-10-2 Checking the Inverter Board Error Detection Circuit] [8-10-3 Checking the Compressor for Ground Fault and Coil Resistance Problems] [8-10-4 Checking the Inverter for Damage at No-Load] [8-10-5 Checking the Inverter for Damage during Compressor Operation] [8-10-11 Checking the Installation Conditions]
(3) Open phase in the power-supply due to improper power-supply wiring	Refer to item (6) in section [6-1 Read before Test Run]

In the case of 4255 and 4256

Cause	Check method and remedy
(1) Grounding fault of fan motor	Refer to the following page(s). [8-10-7 Checking the Fan Motor for Ground Fault and Coil Resistance Problems]
(2) Fan board failure	Refer to the following page(s). [8-10-8 Checking the Fan Board Error Detection Circuit at No Load] [8-10-9 Checking the Fan Board for Damage at No Load] [8-10-10 Checking the Fan Board for Damage with Load]

Note

For inverter-related error codes, refer to the following page(s). [8-10 Troubleshooting Inverter Problems]

7-6-24 Error Code [4250, 4255, 4256] Detail Code 105

1. Error code definition

Overcurrent error due to short-circuited motor (Detail code 105)

2. Error definition and error detection method

When a short is detected on the load side just before starting the inverter operation.

3. Cause, Check method and remedy

In the case of 4250

Cause	Check method and remedy
(1) Short - circuited compressor	Refer to the following page(s). [8-10-3 Checking the Compressor for Ground Fault and Coil Resistance Problems]
(2) Output wiring	Check for a short circuit.

In the case of 4255 and 4256

Cause	Check method and remedy
(1) Short - circuited fan motor	Refer to the following page(s). [8-10-7 Checking the Fan Motor for Ground Fault and Coil Resistance Problems]
(2) Output wiring	Check for a short circuit.

Note

For inverter-related error codes, refer to the following page(s). [8-10 Troubleshooting Inverter Problems]

7-6-25 Error Code [4250, 4255, 4256] Detail Code 106 and 107

1. Error code definition

Instantaneous overcurrent (Detail code 106)
Overcurrent (effective value) (Detail code 107)

2. Error definition and error detection method

When a current above the specified value is detected by the electric current sensor.
Refer to the relevant pages for the details of model names and the specified values.

3. Cause, check method and remedy

In the case of 4250

Cause	Check method and remedy
(1) Inverter output related	Refer to the following page(s). [8-10-2 Checking the Inverter Board Error Detection Circuit] [8-10-3 Checking the Compressor for Ground Fault and Coil Resistance Problems] [8-10-4 Checking the Inverter for Damage at No-Load] [8-10-5 Checking the Inverter for Damage during Compressor Operation] [8-10-11 Checking the Installation Conditions] Check the IGBT module resistance value of the INV board, if no problems are found. [8-10-15 Troubleshooting Problems with IGBT Module]
(2) The model selection switches (SW5-3 - 5-8) on the outdoor unit are set incorrectly.	Check the setting for the model selection switch on the outdoor unit (Dipswitches SW5-3 - 5-8 on the outdoor unit control board). For switch settings, refer to the following page(s). [7-9-2 Error Code [7101]]

In the case of 4255 and 4256

Cause	Check method and remedy
(1) Fan board failure	Refer to the following page(s). [8-10-8 Checking the Fan Board Error Detection Circuit at No Load] [8-10-9 Checking the Fan Board for Damage at No Load] [8-10-10 Checking the Fan Board for Damage with Load]
(2) Outdoor unit fan failure	Check the outdoor unit fan for proper operation. Check the fan motor if problems are found with the operation of the fan. Refer to the following page(s). [8-10-7 Checking the Fan Motor for Ground Fault and Coil Resistance Problems]
(3) Air passage blockage	Check that the heat sink cooling air passage is not blocked
(4) The model selection switches (SW5-3 - 5-8) on the outdoor unit are set incorrectly.	Check the setting for the model selection switch on the outdoor unit (Dipswitches SW5-3 - 5-8 on the outdoor unit control board). For switch settings, refer to the following page(s). [7-9-2 Error Code [7101]]

Note

For inverter-related error codes, refer to the following page(s). [8-10 Troubleshooting Inverter Problems]

7-6-26 Error Code [4250] Detail Code 121, 128, and 122

1. Error code definition

DCL overcurrent error (H/W) (Detail code 121 and 128)(outdoor unit) DCL overcurrent error (S/W) (Detail code 122) (outdoor unit)

2. Error definition and error detection method

When a DCL overcurrent is detected by the electric current sensor

3. Cause, check method and remedy

Cause	Check method and remedy
(1) Inverter-output-related items	Refer to the following page(s). [8-10-2 Checking the Inverter Board Error Detection Circuit] Refer to the following page(s). [8-10-3 Checking the Compressor for Ground Fault and Coil Resistance Problems] Refer to the following page(s). [8-10-4 Checking the Inverter for Damage at No-Load] Refer to the following page(s). [8-10-5 Checking the Inverter for Damage during Compressor Operation] Refer to the following page(s). [8-10-11 Checking the Installation Conditions]

Note

For inverter-related error codes, refer to the following page(s). [8-10 Troubleshooting Inverter Problems]

7-6-27 Error Code [4255, 4256] Detail Code 137

1. Error code definition

Motor synchronization loss (Detail code 137)

2. Error definition and error detection method

Fan motor locking was detected during operation.

3. Cause, check method and remedy

Cause	Check method and remedy
(1) Fan motor locking	Check the fan blades for objects obstructing fan rotation.
(2) Fan motor failure	Refer to the following page(s). [8-10-7 Checking the Fan Motor for Ground Fault and Coil Resistance Problems]
(3) Fan board failure	Refer to the following page(s). [8-10-8 Checking the Fan Board Error Detection Circuit at No Load] [8-10-9 Checking the Fan Board for Damage at No Load] [8-10-10 Checking the Fan Board for Damage with Load]

Note

For inverter-related error codes, refer to the following page(s). [8-10 Troubleshooting Inverter Problems]

7-6-28 Error Code [4260]

1. Error code definition

Heatsink overheat protection at startup

2. Error definition and error detection method

When heatsink temperature (THHS) remains at or above TOH for 10 minutes or longer after inverter startup

models	TOH
INV35Y, INV42Y, INV38	100˚C
INV37YC	94˚C
INV39C	98˚C

3. Cause, check method and remedy

Same as 4230 error

7-7 Error Code Definitions and Solutions: Codes [5000 - 5999]

7-7-1 Error Code [5101, 5102, 5103, 5104]

1. Error code definition

5101
Return air temperature sensor (TH21) fault (Indoor unit)
Return air temperature sensor (TH4) fault (OA processing unit)

5102
Pipe temperature sensor (TH22) fault (Indoor unit)
Pipe temperature sensor (TH2) fault (OA processing unit)

5103
Gas-side pipe temperature sensor (TH23) fault (Indoor unit)
Gas-side pipe temperature sensor (TH3) fault (OA processing unit)

5104
Intake air temperature sensor (TH1) fault (OA processing unit)
Intake air temperature sensor (TH24) fault (All-fresh (100% outdoor air) type indoor unit)

2. Error definition and error detection method

- If a short or an open is detected during thermostat ON, the outdoor unit turns to anti-restart mode for 3 minutes. When the error is not restored after 3 minutes (if restored, the outdoor unit runs normally), the outdoor unit makes an error stop.

  Short: detectable at 90°C [194°F] or higher
  Open: detectable at -40°C [-40°F] or lower
- Sensor error at gas-side cannot be detected under the following conditions.
  - During heating operation
  - During cooling operation for 3 minutes after the compressor turns on.

3. Cause, check method and remedy

Cause	Check method and remedy
(1) Thermistor failure (2) Connector contact failure (3) Disconnected wire or partial disconnected thermistor wire (4) Unattached thermistor or contact failure	Check the thermistor resistor. 0°C [32°F]: 15 kΩ 10°C [50°F]: 9.7 kΩ 20°C [68°F] : 6.4 kΩ 30°C [86°F] : 4.3 kΩ 40°C [104°F] : 3.1 kΩ
(5) Indoor board (detection circuit) failure	Check the connector contact. When no fault is found, the indoor board is a failure.

7-7-2 Error Code [5103,5104,5105,5107,5115,5116,5117,5118]

1. Error code definition

5103
Heat exchanger outlet temperature sensor (TH3) fault (Outdoor unit)

5104
Discharge temperature sensor (TH4) fault (Outdoor unit)

5105
Accumulator inlet temperature sensor (TH5) fault (Outdoor unit)

5107
Outside temperature sensor (TH7) fault (Outdoor unit)

5115
Compressor shell bottom temperature sensor (TH15) fault (Outdoor unit)

5116
Accumulator temperature (Bottom) sensor (TH16) failure (Outdoor unit)

5117
Accumulator temperature (Middle) sensor (TH17) failure (Outdoor unit)

5118
Accumulator temperature (High) sensor (TH18) failure (Outdoor unit)

2. Error definition and error detection method

- When a short (high temperature intake) or an open (low temperature intake) of the thermistor is detected (the first detection), the outdoor unit stops, turns to anti-restart mode for 3 minutes, and restarts when the detected temperature of the thermistor.
- When a short or an open is detected again (the second detection) after the first restart of the outdoor unit, the outdoor unit stops, turns to anti-restart mode for 3 minutes, and restarts in 3 minutes when the detected temperature is within the normal range.
- When a short or an open is detected again (the third detection) after the previous restart of the outdoor unit, the outdoor unit makes an error stop.
- When a short or an open of the thermistor is detected just before the restart of the outdoor unit, the outdoor unit makes an error stop, and the error code "5102", "5103", "5104", "5105", "5107", "5115", "5116", "5117", or "5118" will appear.
- During 3-minute antirestart mode, preliminary errors will be displayed on the LED display.
- A short or an open described above is not detected for 10 minutes after the compressor start, during defrost mode, or for 3 minutes after defrost mode.

3. Cause, check method and remedy

Cause		Check method and remedy
(1)	Thermistor failure	Check thermistor resistance.
(2)	Pinched lead wire	Check for pinched lead wire.
(3)	Torn wire coating	Check for wire coating.
(4)	A pin on the male connector is missing or contact failure	Check connector.
(5)	Disconnected wire	Check for wire.
(6)	Thermistor input circuit failure on the control board	Check the intake temperature of the sensor with the LED monitor. When the temperature is far different from the actual temperature, replace the control board.

<Reference>

	Short detection	Open detection
TH3	110 °C [230 °F] and above (0.4 kΩ and below)	-40 °C [-40 °F] and below (130 kΩ and above)
TH4	240 °C [464 °F] and above (0.57 kΩ and below)	0 °C [32 °F] and below (698 kΩ and above)
TH5	70 °C [158 °F] and above (1.13 kΩ and below)	-40 °C [-40 °F] and below (130 kΩ and above)
TH7	110 °C [230 °F] and above (0.4 kΩ and below)	-40 °C [-40 °F] and below (130 kΩ and above)
TH15	110 °C [230 °F] and above (0.4 kΩ and below)	-40 °C [-40 °F] and below (130 kΩ and above)
TH16	110 °C [230 °F] and above (0.4 kΩ and below)	-40 °C [-40 °F] and below (130 kΩ and above)
TH17	110 °C [230 °F] and above (0.4 kΩ and below)	-40 °C [-40 °F] and below (130 kΩ and above)
TH18	110 °C [230 °F] and above (0.4 kΩ and below)	-40 °C [-40 °F] and below (130 kΩ and above)

7-7-3 Error Code [5110]

1. Error code definition

Heatsink temperature sensor (THHS) fault (Detail code 01, 05, 06)

2. Error definition and error detection method

When a short or an open of THHS is detected just before or during the inverter operation.

3. Cause, check method and remedy

Cause	Check method and remedy
(1) INV board or Fan board failure	(Detail code 01) If the problem recurs when the unit is put into operation, replace the INV board. (Detail code 05, 06) If the problem recurs when the unit is put into operation, replace the Fan board.

Note

For inverter-related error codes, refer to the following page(s). [8-10 Troubleshooting Inverter Problems]

7-7-4 Error Code [5111,5112,5115,5116]

1. Error code definition

5111
Liquid inlet temperature sensor (TH11) fault (BC controller)

5112
Bypass outlet temperature sensor (TH12) fault (BC controller)

5115
LEV3(a) outlet temperature sensor (TH15) fault (BC controller)

5116
LEV3(a) inlet temperature sensor (TH16) fault (BC controller)

2. Error definition and error detection method

- If a shorted (high temperature intake) or open (low temperature intake) thermistor (TH11, TH12, TH15, or TH16) is detected during operation, the unit makes an error stop, and an error code "5111," "5112," "5115," or "5116" appears on the display.
- Detection of a short- or open-circuit as described above is suspended during the defrost cycle and for 3 minutes after the operation mode is changed.

3. Cause, check method and remedy

Cause	Check method and remedy
(1) Thermistor failure	Check thermistor resistance.
(2) Pinched lead wire	Check for pinched lead wire.
(3) Torn wire coating	Check for wire coating.
(4) A pin on the male connector is missing or contact failure	Check connector.
(5) Disconnected wire	Check for wire.
(6) Thermistor input circuit failure on the control board	Check the intake temperature of the sensor with the LED monitor. When the temperature is far different from the actual temperature, replace the control board.

<Reference>

	Short detection	Open detection
TH11	110 ˚C [230 ˚F] and above (0.57 kΩ)	-40 ˚C [-40 ˚F] and below (130 kΩ)
TH12	110 ˚C [230 ˚F] and above (0.57 kΩ)	-40 ˚C [-40 ˚F] and below (130 kΩ)
TH15	110 ˚C [230 ˚F] and above (0.57 kΩ)	-40 ˚C [-40 ˚F] and below (130 kΩ)
TH16	110 ˚C [230 ˚F] and above (0.57 kΩ)	-40 ˚C [-40 ˚F] and below (130 kΩ)

7-7-5 Error Code [5120]

1. Error code definition

DCL temperature sensor circuit fault (Detail code 01)(outdoor unit)

2. Error definition and error detection method

When an open phase or a short circuit of the temperature sensor is detected immediately before inverter startup or during operation (applicable to INV37YC and INV39C)

3. Cause, check method and remedy

INV37YC and INV39C

Cause		Check method and remedy
(1)	Contact failure	Check the connector (CNTH) on the inverter board for proper connection.
(2)	DCL temperature sensor	Disconnect the connector (CNTH), check the resistance value of the DCL temperature sensor. Replace the DCL if the resistance is as follows: 0.5 kΩ or below (short-circuit) or 1963 kΩ or above (open-circuit).
(3)	INV board failure	If the problem persists after restart operation, replace the inverter board.

Note

For inverter-related error codes, refer to the following page(s). [8-10 Troubleshooting Inverter Problems]

7-7-6 Error Code [5201]

1. Error code definition

High-pressure sensor fault (63HS1)

2. Error definition and error detection method

- If the high pressure sensor detects 0.098MPa [14psi] or less during the operation, the outdoor unit stops once, turns to antirestart mode for 3 minutes, and restarts after 3 minutes when the detected high pressure sensor is 0.098MPa [14psi] or more.
- If the high pressure sensor detects 0.098MPa [14psi] or less just before the restart, the outdoor unit makes an error stop, and the error code "5201" will appear.
- During 3-minute antirestart mode, preliminary errors will be displayed on the LED display.
- A error is not detected for 3 minutes after the compressor start, during defrost operation, or 3 minutes after defrost operation.

3. Cause, check method and remedy

Cause		Check method and remedy
(1)	High pressure sensor failure	Refer to the following page(s). [8-5-1 Comparing the High-Pressure Sensor Measurement and Gauge Pressure]
(2)	Pressure drop due to refrigerant leak	Check for refrigerant leakage
(3)	Torn wire coating	Check for damaged wire coating
(4)	A pin on the male connector is missing or contact failure	Check whether a connector pin is missing
(5)	Disconnected wire	Check for disconnected or broken wire
(6)	High pressure sensor input circuit failure on the control board	Check the temperature detected by the sensor from the LED monitor. If the temperatureis significantly different from the actual temperature, replace the control board.

7-7-7 Error Code [5201, 5203]

1. Error code definition

5201
High-pressure sensor fault (BC controller PS1)

5203
Intermediate pressure sensor fault (BC controller PS3)

2. Error definition and error detection method

When a pressure sensor reading of 4.06 MPa [589 psi] or above OR 0.098Mpa[142psi] or below is detected, error codes "5201" OR "5203" will appear.
The unit will continue its operation by using other sensors as a backup.

3. Cause, check method and remedy

Cause	Check method and remedy
(1) High pressure sensor failure	Refer to the following page(s). [8-5-1 Comparing the High-Pressure Sensor Measurement and Gauge Pressure]
(2) Torn wire coating	Check for damaged wire coating
(3) A pin on the male connector is missing or contact failure	Check whether a connector pin is missing
(4) Disconnected wire	Check for disconnected or broken wire
(5) High pressure sensor input circuit failure on the control board	Check the temperature detected by the sensor from the LED monitor. If the temperature is significantly different from the actual temperature, replace the control board.

7-7-8 Error Code [5301] Detail Code 115

1. Error code definition

ACCT sensor fault (Detail code 115) (YNU)

2. Error definition and error detection method

When the formula "output current < 1.8 Arms" remains satisfied for 10 seconds while the inverter is in operation.

3. Cause, check method and remedy

Cause	Check method and remedy
(1) Contact failure	Check the connector (CNCT2) on the INV board for proper connection.
(2) INV output phase loss	Check the output wire for proper connection.
(3) ACCT sensor failure	Refer to the following page(s). [8-10-14 Simple Check on Inverter Circuit Components]
(4) Compressor failure	Refer to the following page(s). [8-10-3 Checking the Compressor for Ground Fault and Coil Resistance Problems]
(5) INV board failure	Replace the INV board if the problem persists after the operation is resumed.

Note

For inverter-related error codes, refer to the following page(s). [8-10 Troubleshooting Inverter Problems]

7-7-9 Error Code [5301] Detail Code 115

1. Error code definition

ACCT sensor fault (Detail code 115) (TNU)

2. Error definition and error detection method

When the formula "output current < 2.0 Arms" remains satisfied for 10 seconds while the inverter is in operation.

3. Cause, check method and remedy

Cause	Check method and remedy
(1) Contact failure	Check the connector (CNCT2) on the INV board for proper connection.
(2) INV output phase loss	Check the output wire for proper connection.
(3) ACCT sensor failure	Refer to the following page(s). [8-10-14 Simple Check on Inverter Circuit Components]
(4) Compressor failure	Refer to the following page(s). [8-10-3 Checking the Compressor for Ground Fault and Coil Resistance Problems]
(5) INV board failure	Replace the INV board if the problem persists after the operation is resumed.

Note

For inverter-related error codes, refer to the following page(s). [8-10 Troubleshooting Inverter Problems]

7-7-10 Error Code [5301] Detail Code 117

1. Error code definition

ACCT sensor circuit fault (Detail code 117)

2. Error definition and error detection method

When an error value is detected with the ACCT detection circuit just before the inverter starts

3. Cause, check method and remedy

Cause	Check method and remedy
(1) INV board failure	Refer to the following page(s). [8-10-2 Checking the Inverter Board Error Detection Circuit] [8-10-4 Checking the Inverter for Damage at No-Load] [8-10-5 Checking the Inverter for Damage during Compressor Operation]
(2) Compressor failure	Refer to the following page(s). [8-10-3 Checking the Compressor for Ground Fault and Coil Resistance Problems]

Note

For inverter-related error codes, refer to the following page(s). [8-10 Troubleshooting Inverter Problems]

7-7-11 Error Code [5301] Detail Code 119

1. Error code definition

Open-circuited IPM/Loose ACCT connector (Detail code 119)

2. Error definition and error detection method

Presence of enough current cannot be detected during the self-diagnostic operation immediately before inverter startup.

3. Cause, check method and remedy

Cause	Check method and remedy
(1) ACCT sensor disconnection	Check the connector CNCT2 on the INV board for proper connection. Check the ACCT for proper connection.
(2) ACCT sensor failure	Refer to the following page(s). [8-10-14 Simple Check on Inverter Circuit Components]
(3) Inverter failure	Refer to the following page(s). [8-10-4 Checking the Inverter for Damage at No-Load] [8-10-5 Checking the Inverter for Damage during Compressor Operation]
(4) Compressor failure	Refer to the following page(s). [8-10-3 Checking the Compressor for Ground Fault and Coil Resistance Problems]

Note

For inverter-related error codes, refer to the following page(s). [8-10 Troubleshooting Inverter Problems]

7-7-12 Error Code [5301] Detail Code 120

1. Error code definition

Faulty ACCT wiring (Detail code 120)

2. Error definition and error detection method

Presence of target current cannot be detected during the self-diagnostic operation immediately before startup.

3. Cause, check method and remedy

Cause	Check method and remedy
(1) ACCT sensor connection error	Check the ACCT for proper connection. Refer to the following page(s). [8-10-14 Simple Check on Inverter Circuit Components]
(2) ACCT sensor failure	Refer to the following page(s). [8-10-14 Simple Check on Inverter Circuit Components]
(3) Inverter failure	Refer to the following page(s). [8-10-4 Checking the Inverter for Damage at No-Load] [8-10-5 Checking the Inverter for Damage during Compressor Operation]
(4) Compressor failure	Refer to the following page(s). [8-10-3 Checking the Compressor for Ground Fault and Coil Resistance Problems]

Note

For inverter-related error codes, refer to the following page(s). [8-10 Troubleshooting Inverter Problems]

7-7-13 Error Code [5301] Detail Code 127

1. Error code definition

DCL electric current circuit error (Detail code 127)(outdoor unit)

2. Error definition and error detection method

When an abnormal value in the DCL electric current sensor detection circuit is detected

3. Cause, check method and remedy

Cause	Check method and remedy
(1) Contact failure	Check the wiring between CNCT1A and CNCT1B.
(2) Incorrect installation	Check the wiring of SC-L terminal (YNU) or SC-B terminal (TNU).
(3) INV board failure	If the problem persists after restart operation, replace the inverter board.

Note

For inverter-related error codes, refer to the following page(s). [8-10 Troubleshooting Inverter Problems]

7-7-14 Error Code [5305, 5306] Detail Code 135

1. Error code definition

Current sensor fault (Detail code 135)

2. Error definition and error detection method

Detection of output current below 0.2 Arms for 10 continuous seconds while fan motor is in operation

3. Cause, check method and remedy

Cause	Check method and remedy
(1) Open output phase of fan board	Check the output wiring from the fan board for proper connection.
(2) Fan motor error	Refer to the following page(s). [8-10-7 Checking the Fan Motor for Ground Fault and Coil Resistance Problems]
(3) Fan board failure	Refer to the following page(s). [8-10-8 Checking the Fan Board Error Detection Circuit at No Load] [8-10-9 Checking the Fan Board for Damage at No Load] [8-10-10 Checking the Fan Board for Damage with Load]

Note

For inverter-related error codes, refer to the following page(s). [8-10 Troubleshooting Inverter Problems]

7-7-15 Error Code [5305, 5306] Detail Code 136

1. Error code definition

Current sensor/circuit fault (Detail code 136)

2. Error definition and error detection method

Detection of abnormal value by the current detection circuit before the startup of fan motor

3. Cause, check method and remedy

Cause	Check method and remedy
(1) Fan board fault	Refer to the following page(s). [8-10-8 Checking the Fan Board Error Detection Circuit at No Load] [8-10-9 Checking the Fan Board for Damage at No Load] [8-10-10 Checking the Fan Board for Damage with Load]

Note

For inverter-related error codes, refer to the following page(s). [8-10 Troubleshooting Inverter Problems]

7-7-16 Error Code [5701]

1. Error code definition

Loose float switch connector

2. Error definition and error detection method

Detection of the disconnected float switch (open-phase condition) during operation

3. Cause, check method and remedy

(1) CN4F disconnection or contact failure

Check for disconnection of the connector (CN4F) on the indoor unit control board.

7-8 Error Code Definitions and Solutions: Codes [6000 - 6999]

7-8-1 Error Code [6201]

1. Error code definition

Remote controller board fault (nonvolatile memory error)

2. Error definition and error detection method

This error is detected when the data cannot be read out from the built-in nonvolatile memory on the remote controller.

3. Cause, check method and remedy

(1) Remote controller failure

Replace the remote controller.

7-8-2 Error Code [6202]

1. Error code definition

Remote controller board fault (clock IC error)

2. Error definition and error detection method

This error is detected when the built-in clock on the remote controller is not properly functioning.

3. Cause, check method and remedy

(1) Remote controller failure

Replace the remote controller.

7-8-3 Error Code [6600]

1. Error code definition

Address overlaps

2. Error definition and error detection method

An error in which signals from more than one indoor units with the same address are received
Detail code 001: Detection of overlapped address in centralized control system
Detail code 002: Detection of overlapped address in indoor unit system

Note

The address and attribute that appear on the remote controller indicate the controller that detected the error.

3. Cause, check method and remedy

Cause	Check method and remedy
(1) Two or more of the following have the same address: Outdoor units, BC controllers, indoor units, LOSSNAY units, controllers such as ME remote controllers. <Example> 6600 "01" appears on the remote controller Unit #01 detected the error. Two or more units in the system have 01 as their address. (2) Signals are distorted by the noise on the transmission line.	♦Find the unit that has the same address as that of the error source. **Once the unit is found, correct the address. Then, turn off the outdoor units, indoor units, BC controllers, and LOSSNAY units, keep them all turned off for at least five minutes, and turn them back on.** ♦When air conditioning units are operating normally despite the address overlap error Check the transmission wave shape and noise on the transmission line. Refer to the following page(s). [8-4 Checking Transmission Waveform and for Electrical Noise Interference]

7-8-4 Error Code [6601]

1. Error code definition

Polarity setting error

2. Error definition and error detection method

The error detected when transmission processor cannot distinguish the polarities of the M-NET transmission line.

3. Cause, check method and remedy

Cause	Check method and remedy
(1) No voltage is applied to the M-NET transmission line that AE-200A/AG-150A/GB-50ADA/PAC-YG50ECA/BAC-HD150 are connected to. (2) M-NET transmission line to which AE-200A/AG-150A/GB-50ADA/PAC-YG50ECA/BAC-HD150 are connected is short-circuited. (3) When two or more power supplies are connected to the M-NET	Check if power is supplied to the M-NET transmission line of the AE-200A/AG-150A/GB-50ADA/PAC-YG50ECA/BAC-HD150, and correct any problem found.

7-8-5 Error Code [6602]

1. Error code definition

Transmission processor hardware error

2. Error definition and error detection method

Although "0" was surely transmitted by the transmission processor, "1" is displayed on the transmission line.
Detail code 001: Transmission processor hardware error in centralized control system
Detail code 002: Transmission processor hardware error in indoor unit system

Note

The address/attribute appeared on the display on the remote controller indicates the controller where an error occurred.

3. Cause

1) When the wiring work of or the polarity of either the indoor or outdoor transmission line is performed or is changed while the power is on, the transmitted data will collide, the wave shape will be changed, and an error will be detected.
2) Grounding fault of the transmission line
3) When grouping the indoor units that are connected to different outdoor units, the male power supply connectors on the multiple outdoor units are connected to the female power supply switch connector (CN40).
4) When the power supply unit for transmission lines is used in the system connected with MELANS, the male power supply connector is connected to the female power supply switch connector (CN40) on the outdoor unit.
5) Controller failure of the source of the error
6) When the transmission data is changed due to the noise on the transmission line
7) Voltage is not applied on the transmission line for centralized control (in case of grouped indoor units connected to different outdoor units or in case of the system connected with MELANS)

4. Check method and remedy

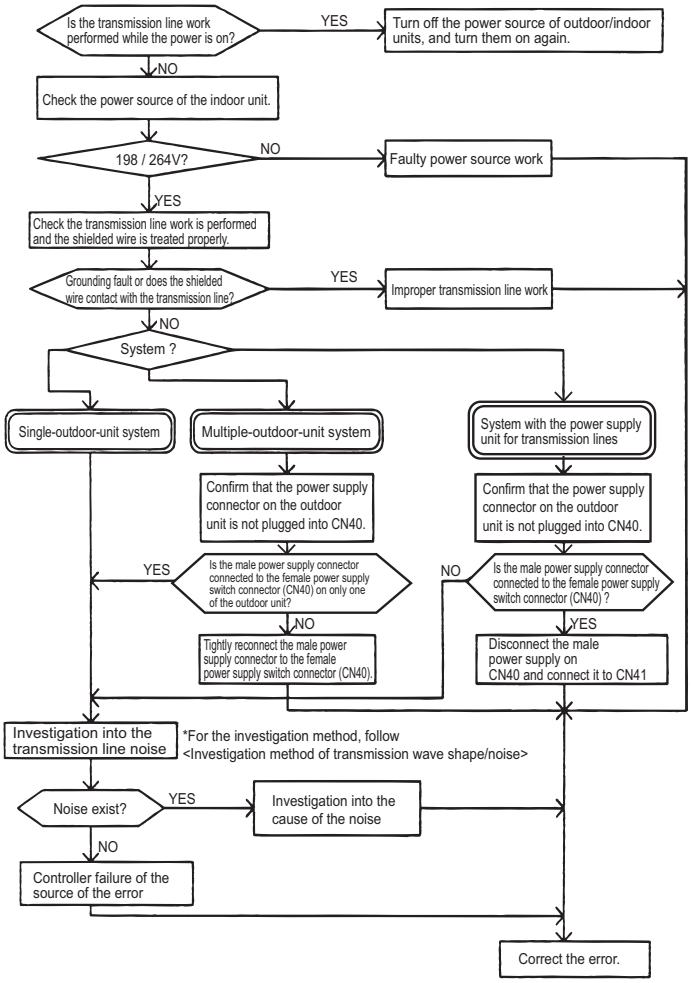

7-8-6 Error Code [6603]

1. Error code definition

Transmission line bus busy error

2. Error definition and error detection method

- Generated error when the command cannot be transmitted for 4-10 minutes in a row due to bus-busy
- Generated error when the command cannot be transmitted to the transmission line for 4-10 minutes in a row due to noise

Detail code 001: Transmission Bus-Busy error in centralized control system
Detail code 002: Transmission Bus-Busy error in indoor unit system

Note

The address/attribute appeared on the display on the remote controller indicates the controller where an error occurred.

3. Cause, check method and remedy

Cause	Check method and remedy
(1) The transmission processor cannot be transmitted as the short-wavelength voltage like noise exists consecutively on the transmission line.	Check the transmission wave shape and noise on the transmission line. Refer to the following page(s). [8-4 Checking Transmission Waveform and for Electrical Noise Interference] → No noise indicates that the error source controller is a failure. → If noise exists, investigate the noise.
(2) Error source controller failure	

7-8-7 Error Code [6606]

1. Error code definition

Communication error between device processor and transmission processor or M-NET processor

2. Error definition and error detection method

Communication error between device processor on circuit board and transmission processor or M-NET processor
Detail code 003: Communication error between device processor on circuit board and M-NET processor

Note

The address/attribute appeared on the display on the remote controller indicates the controller where an error occurred.

3. Cause, check method and remedy

Cause	Check method and remedy
(1) Data is not properly transmitted due to accidental erroneous operation of the controller of the error source.	Turn off the power source of the outdoor and the indoor units.(When the power source is turned off separately, the microcomputer will not be reset, and the error will not be corrected.) → If the same error occurs, the error source controller is a failure.
(2) Error source controller failure	

7-8-8 Error Code [6607] Error Source Address = Outdoor Unit (OC)

1. Error code definition

No ACK error

2. Error definition and error detection method

The error is detected when no acknowledgement (ACK signal) is received after the transmission. (eg. When the data is transmitted six times in a row with 30 seconds interval, the error is detected on the transmission side.)

Note

The address/attribute appeared on the display on the remote controller indicates the controller which did not provide the response (ACK).

3. Cause, check method and remedy

Cause	Check method and remedy
(1) Incidental cause	1) Check whether Error Code [Er91] is displayed on the service LED on the outdoor unit.
(2) Contact failure of transmission line of OC or IC	2) If the code is not displayed, turn off the power to the outdoor unit, and then turn it back on.
(3) Decrease of transmission line voltage/signal by exceeding acceptable range of transmission wiring. Farthest: 200 m [656ft] or less Remote controller wiring: 10m [32ft] or less	3) If the error is accidental, it will run normally. If not, check the causes (2) - (5). * Skip check item 1) on the outdoor unit whose firmware does not need to be updated.
(4) Erroneous sizing of transmission line (Not within the range below). Wire diameter: 1.25mm^2 [AWG16] or more	
(5) Outdoor unit control board failure	
(6) Firmware update error on the outdoor unit	

7-8-9 Error Code [6607] Error Source Address = BC controller (BC)

1. Error code definition

No ACK error

2. Error definition and error detection method

The error is detected when no acknowledgement (ACK signal) is received after the transmission. (eg. When the data is transmitted six times in a row with 30 seconds interval, the error is detected on the transmission side.)

Note

The address/attribute appeared on the display on the remote controller indicates the controller which did not provide the response (ACK).

3. Cause, check method and remedy

Cause	Check method and remedy
(1) Incidental cause	1) Turn off the power to the outdoor unit and the BC controller, leave them turned off for at least 5 minutes, and then turn them back on.
(2) When BC controller address is changed or modified during operation.	2) If the error is accidental, it will run normally. If not, check the causes (2) - (5).
(3) Faulty or disconnected transmission wiring of BC controller	
(4) Disconnected connector of BC controller (CN02)	
(5) Faulty control board of BC controller	

7-8-10 Error Code [6607] Error Source Address = Indoor Unit (IC)

1. Error code definition

No ACK error

2. Error definition and error detection method

The error is detected when no acknowledgement (ACK signal) is received after the transmission. (eg. When the data is transmitted six times in a row with 30 seconds interval, the error is detected on the transmission side.)

Note

The address/attribute appeared on the display on the remote controller indicates the controller which did not provide the response (ACK).

3. Cause, check method and remedy

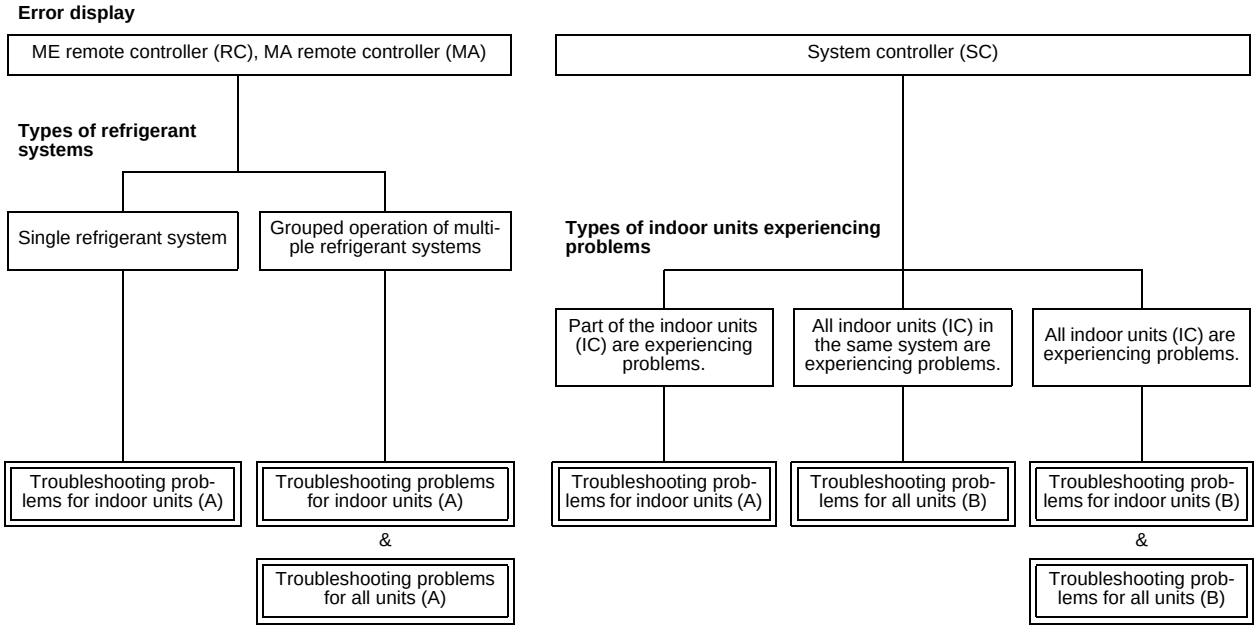

(1) Troubleshooting problems for indoor units (A)

Cause	Check method and remedy
(1) Incidental cause	1) Turn off the outdoor/indoor units for 5 or more minutes, and turn them on again.
(2) When IC unit address is changed or modified during operation.	2) If the error is accidental, it will run normally. If not, check the causes (2) - (6).
(3) Faulty or disconnected IC transmission wiring	
(4) Disconnected IC connector (CN2M)	
(5) Indoor unit controller failure	
(6) ME remote controller failure	

(2) Troubleshooting problems for indoor units (B)

Cause	Check method and remedy
(1) When the power supply unit for transmission lines is used and the male power supply connector is connected to the female power supply switch connector (CN40) for the transmission line for centralized control (2) Disconnection or shutdown of the power source of the power supply unit for transmission line (3) System controller (MELANS) malfunction	1) Check voltage of the transmission line for centralized control. •20 V or more: Check (1) on the left. •Less than 20 V: Check (2) on the left. 2) Check the causes of the error indicated by the error codes listed in items (1) through (3) in the "Cause" column.

7-8-11 Error Code [6607] Error Source Address = LOSSNAY (LC)

1. Error code definition

No ACK error

2. Error definition and error detection method

The error is detected when no acknowledgement (ACK signal) is received after the transmission. (eg. When the data is transmitted six times in a row with 30 seconds interval, the error is detected on the transmission side.)

Note

The address/attribute appeared on the display on the remote controller indicates the controller which did not provide the response (ACK).

3. Cause, check method and remedy

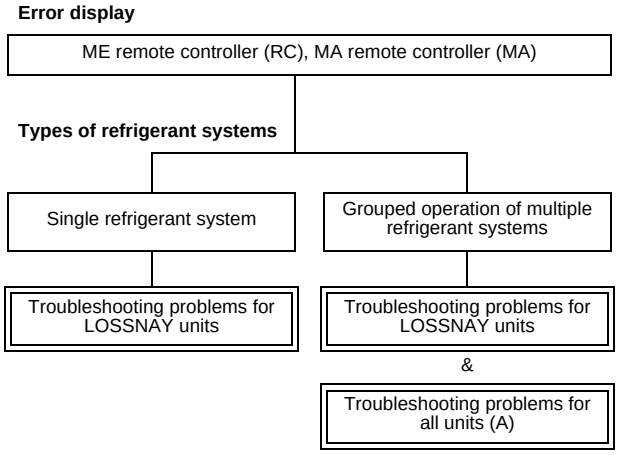

(1) Troubleshooting problems for LOSSNAY units

Cause	Check method and remedy
(1) Incidental cause	1) Turn off the power source of LOSSNAY and turn it on again.
(2) The power source of LOSSNAY has been shut off.	2) If the error is accidental, it will run normally. If not, check the causes (2) - (6).
(3) When the address of LOSSNAY is changed in the middle of the operation	
(4) Faulty or disconnected transmission wiring of LOSSNAY	
(5) Disconnected connector (CN1) on LOSSNAY	
(6) Controller failure of LOSSNAY	

7-8-12 Error Code [6607] Error Source Address = ME Remote Controller

1. Error code definition

No ACK error

2. Error definition and error detection method

The error is detected when no acknowledgement (ACK signal) is received after the transmission. (eg. When the data is transmitted six times in a row with 30 seconds interval, the error is detected on the transmission side.)

Note

The address/attribute appeared on the display on the remote controller indicates the controller which did not provide the response (ACK).

3. Cause, check method and remedy

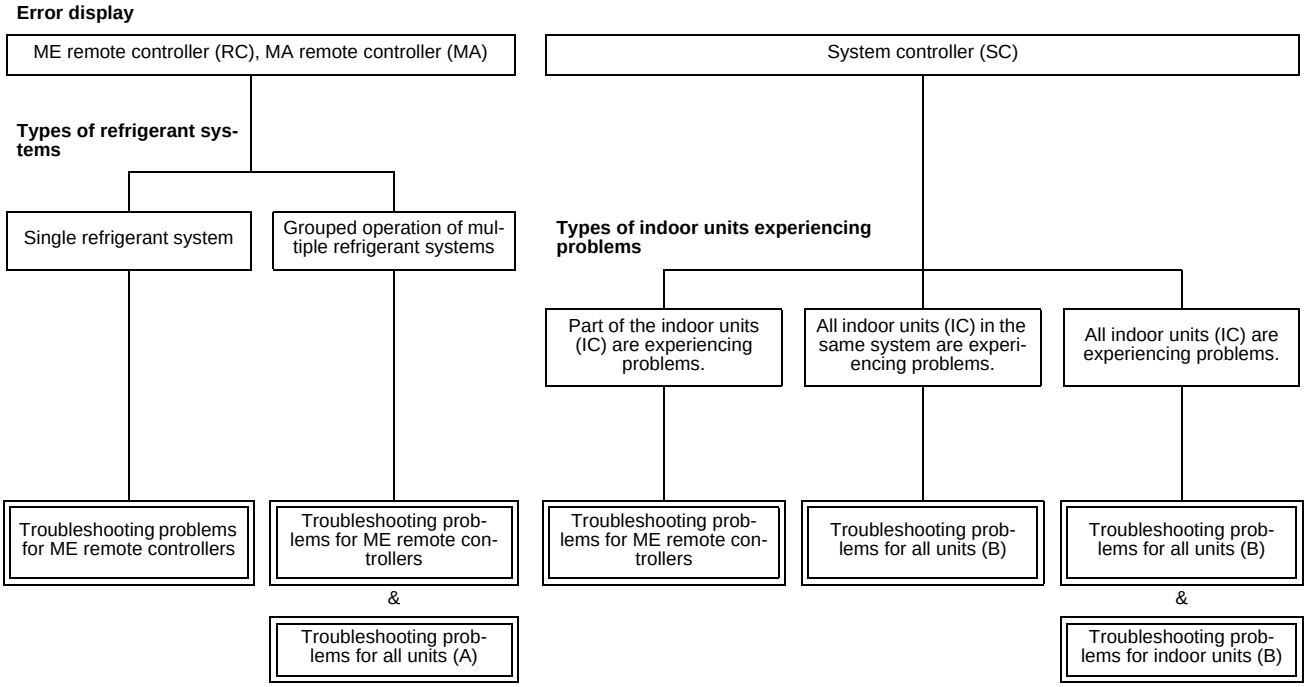

(1) Troubleshooting problems for ME remote controllers

Cause	Check method and remedy
(1) Incidental cause	1) Turn off the power source of the outdoor unit for 5 minutes or more, and turn it on again.
(2) Faulty transmission wiring at IC unit side.	2) If not, check the causes (2) - (5).
(3) Faulty wiring of the transmission line for ME remote controller	
(4) When the address of ME remote controller is changed in the middle of the operation	
(5) ME remote controller failure	

7-8-13 Error Code [6607] Error Source Address = System Controller

1. Error code definition

No ACK error

2. Error definition and error detection method

The error is detected when no acknowledgement (ACK signal) is received after the transmission. (eg. When the data is transmitted six times in a row with 30 seconds interval, the error is detected on the transmission side.)

Note

The address/attribute appeared on the display on the remote controller indicates the controller which did not provide the response (ACK).

3. Cause, check method and remedy

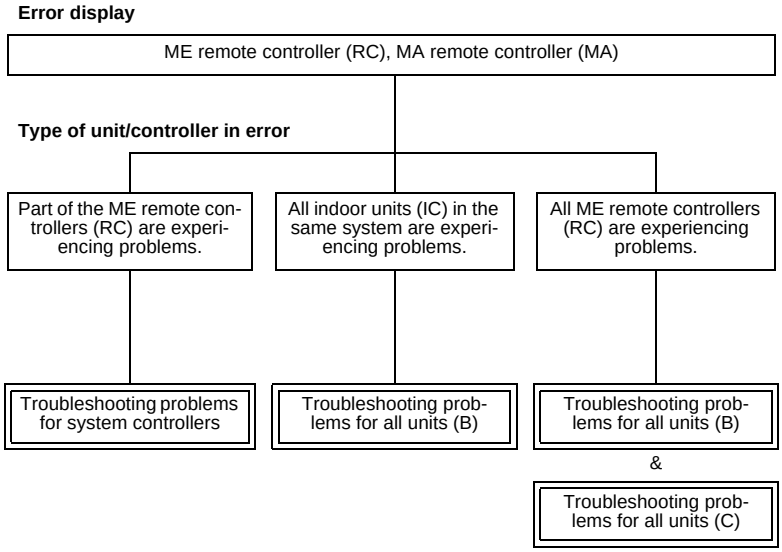

(1) Troubleshooting problems for system controllers

Cause	Check method and remedy
(1) Incidental cause	1) Turn off the power source of the outdoor unit for 5 minutes or more, and turn it on again.
(2) Faulty wiring of the transmission line for ME remote controller	2) If not, check the causes (2) - (4).
(3) When the address of ME remote controller is changed in the middle of the operation	
(4) ME remote controller failure	

7-8-14 Error Code [6607] All Error Source Addresses

1. Error code definition

No ACK error

2. Error definition and error detection method

The error is detected when no acknowledgement (ACK signal) is received after the transmission. (eg. When the data is transmitted six times in a row with 30 seconds interval, the error is detected on the transmission side.)

Note

The address/attribute appeared on the display on the remote controller indicates the controller which did not provide the response (ACK).

3. Cause, check method and remedy

(1) Troubleshooting problems for all units (A)

Cause	Check method and remedy
(1) Disconnection or short circuit of the transmission line for the outdoor unit on the terminal block for centralized control line connection (TB7) (2) When multiple outdoor units are connected and the power source of one of the outdoor units has been shut off. (3) The male power supply connector of the outdoor unit is not connected to the female power supply switch connector (CN40). (4) The male power supply connectors on 2 or more outdoor units are connected to the female power supply switch connector (CN40) for centralized control. If an error occurs, after the unit runs normally once, the following causes may be considered. •Total capacity error (7100) •Capacity code error (7101) •Error in the number of connected units (7102) •Address setting error (7105)	1) Check the causes of (1) - (4). If the cause is found, correct it. If no cause is found, check 2). 2) Check the LED displays for troubleshooting on other remote controllers whether an error occurs. •When an error is present Check the causes of the error indicated by the error codes listed in item (4) in the "Cause" column. •When no errors are present Indoor unit circuit board failure

(2) Troubleshooting problems for all units (B)

Cause	Check method and remedy
(1) Total capacity error (7100) (2) Capacity code error (7101) (3) Error in the number of connected units (7102) (4) Address setting error (7105) (5) Disconnection or short circuit of the transmission line for the outdoor unit on the terminal block for centralized control line connection (TB7) (6) Turn off the power source of the outdoor unit (7) Malfunction of electrical system for the outdoor unit	1) Check the LED display for troubleshooting on the outdoor unit. •When an error is present Check the causes of the error indicated by the error codes listed in items (1) through (4) in the "Cause" column. •When no errors are present Check the causes of the error indicated by the error codes listed in items (5) through (7) in the "Cause" column.

(3) Troubleshooting problems for all units (C)

Cause	Check method and remedy
(1) When the power supply unit for transmission lines is used and the male power supply connector is connected to the female power supply switch connector (CN40) for the transmission line for centralized control (2) Disconnection or shutdown of the power source of the power supply unit for transmission line (3) System controller (MELANS) malfunction	Check the causes of the error indicated by the error codes listed in items (1) through (3) in the "Cause" column.

7-8-15 Error Code [6607] No Error Source Address

1. Error code definition

No ACK error

2. Error definition and error detection method

The error is detected when no acknowledgement (ACK signal) is received after the transmission. (eg. When the data is transmitted six times in a row with 30 seconds interval, the error is detected on the transmission side.)

Note

The address/attribute appeared on the display on the remote controller indicates the controller which did not provide the response (ACK).

3. Cause, check method and remedy

Cause	Check method and remedy
(1) Although the address of ME remote controller has been changed after the group is set using ME remote controller, the indoor unit is keeping the memory of the previous address. The same symptom will appear for the registration with SC. (2) Although the address of LOSSNAY has been changed after the interlock registration of LOSSNAY is made using ME remote controller, the indoor unit is keeping the memory of the previous address.	Delete unnecessary information of non-existing address which some indoor units have. Use either of the following two methods for deletion. 1) Address deletion by ME remote controller Delete unnecessary address information using the manual setting function of ME remote controller. Refer to the ME remote controller instructions manual for detail. 2) Deletion of connection information of the outdoor unit by the deleting switch Note that the above method will delete all the group settings set via the ME remote controller and all the interlock settings between LOSSNAY units and indoor units. Procedures 1) Turn off the power source of the outdoor unit, and wait for 5 minutes. 2) Turn on the dip switch (SW5-2) on the outdoor unit control board. 3) Turn on the power source of the outdoor unit, and wait for 5 minutes. 4) Turn off the power source of the outdoor unit, and wait for 5 minutes. 5) Turn off the dip switch (SW5-2) on the outdoor unit control board. 6) Turn on the power source of the outdoor unit.

7-8-16 Error Code [6608]

1. Error code definition

No response error

2. Error definition and error detection method

- When no response command is returned although acknowledgement (ACK) is received after transmission, an error is detected.
- When the data is transmitted 10 times in a row with 3 seconds interval, an error is detected on the transmission side.

Note

The address/attribute appeared on the display on the remote controller indicates the controller where an error occurred.

3. Cause

1) The transmission line work is performed while the power is on, the transmitted data will collide, and the wave shape will be changed.
2) The transmission is sent and received repeatedly due to noise.
3) Decrease of transmission line voltage/signal by exceeding acceptable range of transmission wiring.
   Farthest:200m [656ft] or less
   Remote controller wiring:12m [39ft] or less
4) The transmission line voltage/signal is decreased due to erroneous sizing of transmission line.
   Wire diameter: 1.25mm^2[AWG16] or more

4. Check method and remedy

1) When an error occurs during commissioning, turn off the power sources for the outdoor unit, indoor unit, BC controller, and LOSSNAY for 5 or more minutes, and then turn them on again.
   - When they return to normal operation, the cause of the error is the transmission line work performed with the power on.
   - If an error occurs again, check the cause 2).
2) Check 3) and 4) above.
   - If the cause is found, correct it.
   - If no cause is found, check 3).
3) Check the transmission waveform, and check the transmission line for electrical noise. For details, refer to the following page(s). [8-4 Checking Transmission Waveform and for Electrical Noise Interference]
   Noise is the most possible cause of the error "6608".

7-8-17 Error Code [6831]

1. Error code definition

MA remote controller signal reception error (No signal reception)

2. Error definition and error detection method

- Communication between the MA remote controller and the indoor unit is not done properly.
- No proper data has been received for 3 minutes.

3. Cause

1) Contact failure of the remote controller lines of MA remote controller or the indoor unit.
2) All the remote controllers are set to SUB.
3) Failure to meet wiring regulations
   - Wire length
   - Wire size
   - Number of remote controllers
   - Number of indoor units
4) The remote controller is removed after the installation without turning the power source off.
5) Noise interference on the remote controller transmission lines
6) Faulty circuit that is on the indoor board and performs transmission/ reception of the signal from the remote controller
7) Problems with the circuit on the remote controller that sends or receives the signals from the remote controller

4. Check method and remedy

1) Check for disconnected or loose transmission lines for the indoor units or MA remote controllers.
2) Confirm that the power is supplied to the main power source and the remote controller line.
3) Confirm that MA remote controller's capacity limit is not exceeded.
4) Check the sub/main setting of the MA remote controllers.One of them must be set to MAIN.
5) Diagnose the remote controller (described in the remote controller installation manual).
   [OK]: no problems with the remote controller (check the wiring regulations)
   [NG]: Replace the MA remote controller.
   [6832, 6833, ERC]: Due to noise interference <Go to 6)>
6) Check the transmission waveform, and check the MA remote controller line for electrical noise. For details, refer to the following page(s). [8-4 Checking Transmission Waveform and for Electrical Noise Interference]
7) When no problems are found with items 1) through 6), replace the indoor unit board or the MA remote controller.
   The following status can be confirmed on LED1 and 2 on the indoor unit board.
   - If LED1 is lit, the main power source of the indoor unit is turned on.
   - If LED2 is lit, the MA remote controller line is being powered.

7-8-18 Error Code [6832]

1. Error code definition

MA remote controller signal transmission error (Synchronization error)

2. Error definition and error detection method

- MA remote controller and the indoor unit is not done properly.
- Failure to detect opening in the transmission path and unable to send signals
  - ∗Indoor unit: 3 minutes
  - ∗Remote controller: 6 seconds

3. Cause

1) Contact failure of the remote controller lines of MA remote controller or the indoor unit
2) 2 or more remote controllers are set to MAIN
3) Overlapped indoor unit address
4) Noise interference on the remote controller lines
5) Failure to meet wiring regulations
   - Wire length
   - Wire size
   - Number of remote controllers
   - Number of indoor units
6) Problems with the circuit on the remote controller that sends or receives the signals from the remote controller

4. Check method and remedy

1) Check for disconnected or loose transmission lines for the indoor units or MA remote controllers.
2) Confirm that the power is supplied to the main power source and the remote controller line.
3) Confirm that MA remote controller's capacity limit is not exceeded.
4) Check the sub/main setting of the MA remote controllers.One of them must be set to MAIN.
5) Diagnose the remote controller (described in the remote controller installation manual).
   [OK]: no problems with the remote controller (check the wiring regulations)
   [NG]: Replace the MA remote controller.
   [6832, 6833, ERC]: Due to noise interference <Go to 6)>
6) Check the transmission waveform, and check the MA remote controller line for electrical noise. For details, refer to the following page(s). [8-4 Checking Transmission Waveform and for Electrical Noise Interference]
7) When no problems are found with items 1) through 6), replace the indoor unit board or the MA remote controller.
   The following status can be confirmed on LED1 and 2 on the indoor unit board.
   - If LED1 is lit, the main power source of the indoor unit is turned on.
   - If LED2 is lit, the MA remote controller line is being powered.

7-8-19 Error Code [6833]

1. Error code definition

MA remote controller signal transmission error (Hardware error)

2. Error definition and error detection method

- Communication between the MA remote controller and the indoor unit is not done properly.
- An error occurs when the transmitted data and the received data differ for 30 times in a row.

3. Cause

1) Contact failure of the remote controller lines of MA remote controller or the indoor unit
2) 2 or more remote controllers are set to MAIN
3) Overlapped indoor unit address
4) Noise interference on the remote controller lines
5) Failure to meet wiring regulations
   - Wire length
   - Wire size
   - Number of remote controllers
   - Number of indoor units
6) Problems with the circuit on the remote controller that sends or receives the signals from the remote controller

4. Check method and remedy

1) Check for disconnected or loose transmission lines for the indoor units or MA remote controllers.
2) Confirm that the power is supplied to the main power source and the remote controller line.
3) Confirm that MA remote controller's capacity limit is not exceeded.
4) Check the sub/main setting of the MA remote controllers.One of them must be set to MAIN.
5) Diagnose the remote controller (described in the remote controller installation manual).
   [OK]: no problems with the remote controller (check the wiring regulations)
   [NG]: Replace the MA remote controller.
   [6832, 6833, ERC]: Due to noise interference <Go to 6)>
6) Check the transmission waveform, and check the MA remote controller line for electrical noise. For details, refer to the following page(s). [8-4 Checking Transmission Waveform and for Electrical Noise Interference]
7) When no problems are found with items 1) through 6), replace the indoor unit board or the MA remote controller.
   The following status can be confirmed on LED1 and 2 on the indoor unit board.
   - If LED1 is lit, the main power source of the indoor unit is turned on.
   - If LED2 is lit, the MA remote controller line is being powered.

7-8-20 Error Code [6834]

1. Error code definition

MA remote controller signal reception error (Start bit detection error)

2. Error definition and error detection method

- Communication between the MA remote controller and the indoor unit is not done properly.
- No proper data has been received for 2 minutes.

3. Cause

1) Contact failure of the remote controller lines of MA remote controller or the indoor unit.
2) All the remote controllers are set to SUB.
3) Failure to meet wiring regulations
   - Wire length
   - Wire size
   - Number of remote controllers
   - Number of indoor units
4) The remote controller is removed after the installation without turning the power source off.
5) Noise interference on the remote controller transmission lines
6) Faulty circuit that is on the indoor board and performs transmission/ reception of the signal from the remote controller
7) Problems with the circuit on the remote controller that sends or receives the signals from the remote controller

4. Check method and remedy

1) Check for disconnected or loose transmission lines for the indoor units or MA remote controllers.
2) Confirm that the power is supplied to the main power source and the remote controller line.
3) Confirm that MA remote controller's capacity limit is not exceeded.
4) Check the sub/main setting of the MA remote controllers.One of them must be set to MAIN.
5) Diagnose the remote controller (described in the remote controller installation manual).
   [OK]: no problems with the remote controller (check the wiring regulations)
   [NG]: Replace the MA remote controller.
   [6832, 6833, ERC]: Due to noise interference <Go to 6)>
6) Check the transmission waveform, and check the MA remote controller line for electrical noise. For details, refer to the following page(s). [8-4 Checking Transmission Waveform and for Electrical Noise Interference]
7) When no problems are found with items 1) through 6), replace the indoor unit board or the MA remote controller.
   The following status can be confirmed on LED1 and 2 on the indoor unit board.
   - If LED1 is lit, the main power source of the indoor unit is turned on
   - If LED2 is lit, the MA remote controller line is being powered.

7-8-21 Error Code [6840]

1. Error code definition

Indoor-outdoor communication: Reception error

2. Error definition and error detection method

- Abnormal if indoor controller board could not receive any signal normally for 6 minutes after turning the power on
- Abnormal if indoor controller board could not receive any signal normally for 3 minutes.
- Consider the unit as abnormal under the following condition. When 2 or more indoor units are connected to an outdoor unit, indoor controller board could not receive a signal for 3 minutes from outdoor controller circuit board, a signal which allows outdoor controller circuit board to transmit signals.

3. Cause, check method and remedy

Cause		Check method and remedy
(1)	Contact failure, short circuit or miswiring (converse wiring) of indoor/outdoor unit connecting wire.	Check disconnecting or looseness of indoor /outdoor unit connecting wire of indoor unit or outdoor unit. Check all the units in case of twin/triple/quadruple indoor unit system.
(2)	Defective transmitting receiving circuit of outdoor controller circuit board.	Turn the power off, and on again to check. If abnormality generates again, replace indoor controller board or outdoor controller circuit board.
(3)	Defective transmitting receiving circuit of indoor controller board.	
(4)	Noise has entered into indoor/outdoor unit connecting wire.	
(5)	Defective fan motor	Turn the power off, and detach fan motor from connector (CNF1, 2). Then turn the power on again. If abnormality is not displayed, replace fan motor. If abnormality is displayed, replace outdoor controller circuit board.
(6)	Defective rush current resistor of outdoor power circuit board	Check the rush current resistor on outdoor power circuit board with tester. If open is detected, replace the power circuit board.

Note: Refer also to the Service Handbook for the indoor units.

7-8-22 Error Code [6841]

1. Error code definition

A control communication synchronism not recover

2. Error definition and error detection method

Indoor/outdoor unit communication error (Outdoor unit)

- Abnormal if "0" receiving is detected 30 times continuously though outdoor controller circuit board has transmitted "1".
- Abnormal if outdoor controller circuit board could not find blank of transmission path for 3 minutes.

3. Cause, check method and remedy

Cause		Check method and remedy
(1)	Indoor/outdoor unit connecting wire has contact failure.	Check disconnection or looseness of indoor/ outdoor unit connecting wire.
(2)	Defective communication circuit of outdoor controller circuit board.	Turn the power off, and on again to check. Replace outdoor controller circuit board if abnormality is displayed again.
(3)	Noise has entered power supply.	
(4)	Noise has entered indoor/outdoor unit connecting wire.	

Note: Refer also to the Service Handbook for the indoor units.

7-8-23 Error Code [6842]

1. Error code definition

Indoor-outdoor communication: Transmission error

2. Error definition and error detection method

Indoor/outdoor unit communication error (Transmitting error)
Abnormal if "1" receiving is detected 30 times continuously though indoor controller board has transmitted "0".

3. Cause, check method and remedy

Cause	Check method and remedy
(1) Defective transmitting receiving circuit of indoor controller board	Turn the power off, and on again to check. If abnormality generates again, replace indoor controller board.
(2) Noise has entered into power supply.	
(3) Noise has entered into outdoor control wire.	

Note: Refer also to the Service Handbook for the indoor units.

7-8-24 Error Code [6843]

1. Error code definition

A control communication start bit detection error

2. Error definition and error detection method

Indoor/outdoor unit communication error

- Abnormal if indoor controller board could not receive any signal normally for 6 minutes after turning the power on.
- Abnormal if indoor controller board could not receive any signal normally for 3 minutes.
- Consider the unit as abnormal under the following condition. When 2 or more indoor units are connected to an outdoor unit, indoor controller board could not receive a signal for 3 minutes from outdoor controller circuit board, a signal which allows outdoor controller circuit board to transmit signals.

3. Cause, check method and remedy

Cause		Check method and remedy
(1)	Contact failure, short circuit or miswiring (converse wiring) of indoor/outdoor unit connecting wire	Check disconnecting or looseness of indoor /outdoor unit connecting wire of all indoor units or outdoor units.
(2)	Defective transmitting receiving circuit of outdoor controller circuit board.	Turn the power off, and on again to check. If abnormality generates again, replace indoor controller board or outdoor controller circuit board. Note: other indoor controller board may have defect.
(3)	Defective transmitting receiving circuit of indoor controller board.	
(4)	Noise has entered into indoor/outdoor unit connecting wire.	
(5)	Defective fan motor	Turn the power off, and detach fan motor from connector (CNF1, 2). Then turn the power on again. If abnormality is not displayed, replace fan motor. If abnormality is displayed, replace outdoor controller circuit board.
(6)	Defective rush current resistor of outdoor power circuit board	Check the rush current resistor on outdoor power circuit board with tester. If open is detected, replace the power circuit board.

1. Error code definition

A control communication start bit detection error

2. Error definition and error detection method

Indoor/outdoor unit communication error (Outdoor unit)
Abnormal if outdoor controller circuit board could not receive anything normally for 3 minutes.

3. Cause, check method and remedy

Cause		Check method and remedy
(1)	Contact failure of indoor/outdoor unit connecting wire	Check disconnection or looseness of indoor/ outdoor unit connecting wire of indoor or outdoor units.
(2)	Defective communication circuit of outdoor controller circuit board	Turn the power off, and on again to check. Replace indoor controller board or outdoor controller circuit board if abnormality is displayed again.
(3)	Defective communication circuit of indoor controller board	
(4)	Noise has entered into indoor/outdoor unit connecting wire.	

Note: Refer also to the Service Handbook for the indoor units.

7-8-25 Error Code [6846]

1. Error code definition

Start-up time over

2. Error definition and error detection method

Start-up time over The unit cannot finish start-up process within 4 minutes after power on.

3. Cause, check method and remedy

Cause		Check method and remedy
(1)	Contact failure of indoor/outdoor unit connecting wire	Check disconnection or looseness or polarity of indoor/outdoor unit connecting wire of indoor and outdoor units.
(2)	Diameter or length of indoor/outdoor unit connecting wire is out of specified capacity.	Check the following: Diameter of the cables used for indoor-outdoor lines; maximum line distance between indoor and outdoor units (max. 50 m); maximum line distance between indoor units (daisy-changed cables) (max. 30 m); and if flat cables such as VVF is used, make sure they are connected in the order of S1, S2, and S3.
(3)	2 or more outdoor units have refrigerant address "0". (In case of group control)	When units are controlled as groups, check the refrigerant address (SW1 (3-6) on the outdoor unit control board settings) for duplicates.
(4)	Noise has entered into power supply or indoor/outdoor unit connecting wire.	Check the transmission lines for problems.

Note: Refer also to the Service Handbook for the indoor units.

7-9 Error Code Definitions and Solutions: Codes [7000 - 7999]

7-9-1 Error Code [7100]

1. Error code definition

Total capacity error

2. Error definition and error detection method

The model total of indoor units in the system with one outdoor unit exceeds limitations.

3. Error source, cause, check method and remedy,

After troubleshooting the error using the check methods and remedies shown below, turn the power back on.

<table>
<tr><th>Error source</th><th>Cause</th><th>Check method and remedy</th></tr>
<tr><td rowspan="3">Outdoor unit</td><td>(1) The Qj total of indoor units in the system with one outdoor unit exceeds the following table.
<table>
<tr><th>Model</th><th>Capacity total</th></tr>
<tr><td>72 model</td><td>108</td></tr>
<tr><td>96 model</td><td>144</td></tr>
<tr><td>120 model</td><td>180</td></tr>
<tr><td>144 model</td><td>216</td></tr>
<tr><td>168 model</td><td>252</td></tr>
<tr><td>192 model</td><td>288</td></tr>
<tr><td>216 model</td><td>324</td></tr>
<tr><td>240 model</td><td>360</td></tr>
<tr><td>264 model</td><td>396</td></tr>
<tr><td>288 model</td><td>432</td></tr>
<tr><td>312 model</td><td>468</td></tr>
<tr><td>336 model</td><td>504</td></tr>
<tr><td>384 model</td><td>576</td></tr>
<tr><td>432 model</td><td>648</td></tr>
</table></td><td>1) Check the Qj total (capacity code total) of indoor units connected.
2) Check the Qj setting (capacity code) of the connected indoor unit set by the switch (SW2 on indoor unit board).
When the model name set by the switch is different from that of the unit connected, turn off the power source of the outdoor and the indoor units, and change the setting of the Qj (capacity code).</td></tr>
<tr><td>(2) The model selection switches (SW5-3 - 5-8) on the outdoor unit are set incorrectly.
<table>
<tr><th rowspan="2">Model</th><th colspan="6">SW5</th></tr>
<tr><th>3</th><th>4</th><th>5</th><th>6</th><th>7</th><th>8</th></tr>
<tr><td>72 model</td><td>OFF</td><td>ON</td><td>OFF</td><td>OFF</td><td>ON</td><td rowspan="9">*1</td></tr>
<tr><td>96 model</td><td>ON</td><td>ON</td><td>OFF</td><td>OFF</td><td>ON</td></tr>
<tr><td>120 model</td><td>OFF</td><td>OFF</td><td>ON</td><td>OFF</td><td>ON</td></tr>
<tr><td>144 model</td><td>ON</td><td>ON</td><td>ON</td><td>OFF</td><td>ON</td></tr>
<tr><td>168 model</td><td>OFF</td><td>OFF</td><td>OFF</td><td>ON</td><td>ON</td></tr>
<tr><td>192 model</td><td>ON</td><td>OFF</td><td>OFF</td><td>ON</td><td>ON</td></tr>
<tr><td>216 model</td><td>OFF</td><td>ON</td><td>OFF</td><td>ON</td><td>ON</td></tr>
<tr><td>240 model</td><td>ON</td><td>ON</td><td>OFF</td><td>ON</td><td>ON</td></tr>
</table>
*1 ON: EP model; OFF: P model</td><td>Check the setting for the model selection switch on the outdoor unit (Dipswitches SW5-3 - 5-8 on the outdoor unit control board).</td></tr>
<tr><td>(3) The outdoor unit and the auxiliary unit (OS) that is connected to the same system are not properly connected.</td><td>Confirm that the TB3 on the OC and OS are properly connected.</td></tr>
</table>

7-9-2 Error Code [7101]

1. Error code definition

Capacity code setting error

2. Error definition and error detection method

Connection of incompatible (wrong capacity code) indoor unit or outdoor unit

3. Error source, cause, check method and remedy

After troubleshooting the error using the check methods and remedies shown below, turn the power back on.

<table>
<tr><th>Error source</th><th>Cause</th><th>Check method and remedy</th></tr>
<tr><td>Outdoor unit
Indoor unit</td><td>(1) The model name (capacity code) set by the switch (SW2) is wrong.

*The capacity of the indoor unit can be confirmed by the self-diagnosis function (SW1 operation) of the outdoor unit.</td><td>1) Check the model name (capacity code) of the indoor unit which has the error source address set by the switch (SW2 on indoor unit board).
When the model name set by the switch is different from that of the unit connected, turn off the power source of the outdoor and the indoor units, and change the setting of the capacity code.</td></tr>
<tr><td>Outdoor unit</td><td>(2) The model selection switches (SW5-3 - 5-8) on the outdoor unit are set incorrectly.

<table>
<tr><th rowspan="2">Model</th><th colspan="6">SW5</th></tr>
<tr><th>3</th><th>4</th><th>5</th><th>6</th><th>7</th><th>8</th></tr>
<tr><td>72 model</td><td>OFF</td><td>ON</td><td>OFF</td><td>OFF</td><td>ON</td><td rowspan="8">*1</td></tr>
<tr><td>96 model</td><td>ON</td><td>ON</td><td>OFF</td><td>OFF</td><td>ON</td></tr>
<tr><td>120 model</td><td>OFF</td><td>OFF</td><td>ON</td><td>OFF</td><td>ON</td></tr>
<tr><td>144 model</td><td>ON</td><td>ON</td><td>ON</td><td>OFF</td><td>ON</td></tr>
<tr><td>168 model</td><td>OFF</td><td>OFF</td><td>OFF</td><td>ON</td><td>ON</td></tr>
<tr><td>192 model</td><td>ON</td><td>OFF</td><td>OFF</td><td>ON</td><td>ON</td></tr>
<tr><td>216 model</td><td>OFF</td><td>ON</td><td>OFF</td><td>ON</td><td>ON</td></tr>
<tr><td>240 model</td><td>ON</td><td>ON</td><td>OFF</td><td>ON</td><td>ON</td></tr>
</table>
*1 ON: EP model; OFF: P model</td><td>Check the setting for the model selection switch on the outdoor unit (Dipswitches SW5-3 - 5-8 on the outdoor unit control board).</td></tr>
</table>

7-9-3 Error Code [7102]

1. Error code definition

Wrong number of connected units

2. Error definition and error detection method

The number of connected indoor units is "0" or exceeds the allowable value.

3. Error source, cause, check method and remedy

After troubleshooting the error using the check methods and remedies shown below, turn the power back on.

<table>
<tr><th>Error source</th><th>Cause</th><th>Check method and remedy</th></tr>
<tr>
<td>Outdoor unit</td>
<td>(1) Number of indoor units connected to the outdoor terminal block (TB3) for indoor/ outdoor transmission lines exceeds limitations described below.
<table>
<tr><th>Number of units</th><th>Restriction on the number of units</th></tr>
<tr><td>Total number of indoor units</td><td>18 : 72 model
24 : 96 model
30 : 120 model
36 : 144 model
42 : 168 model
48 : 192 model
50 : 216 - 432 models</td></tr>
<tr><td>Number of BC controllers</td><td>1
((E)P72 - (E)P120 models only)</td></tr>
<tr><td>Number of Main BC controllers</td><td>0 or 1</td></tr>
<tr><td>Number of Sub BC controllers</td><td>0 - 11</td></tr>
<tr><td>Total number of LOSSNAY units (During auto address start-up only)</td><td>0 or 1</td></tr>
<tr><td>Total number of outdoor units</td><td>1 : (E)P72 - (E)P168, EP192 - EP240 models
2 : (E)P192 - (E)P336, EP384 - EP432 models</td></tr>
</table>
(2) Disconnected transmission line from the outdoor unit or BC controller
(3) Short-circuited transmission line
When (2) and (3) apply, the following display will appear.
♦ME remote controller
Nothing appears on the remote controller because it is not powered.
♦MA remote controller
"HO" or "PLEASE WAIT" blinks.
(4) The model selection switch (SW5-7) on the outdoor unit is set to OFF. (Normally set to ON)
(5) Outdoor unit address setting error
The outdoor units in the same refrigerant circuit do not have sequential address numbers.</td>
<td>1) Check whether the number of units connected to the outdoor terminal block (TB3) for indoor/ outdoor transmission lines does not exceed the limitation. (See (1) and (2) on the left.)
2) Check (2) - (3) on the left.
3) Check whether the transmission line for the terminal block for centralized control (TB7) is not connected to the terminal block for the indoor/outdoor transmission line (TB3).
4) Check the setting for the model selection switch on the outdoor unit (Dipswitches SW5-7 on the outdoor unit control board).</td>
</tr>
</table>

7-9-4 Error Code [7105]

1. Error code definition

Address setting error

2. Error definition and error detection method

Erroneous setting of OC unit address
Erroneous setting of BC controller address

3. Error source, cause, check method and remedy

Error source	Cause	Check method and remedy
Outdoor unit BC controller	Erroneous setting of OC unit address The address of outdoor unit is not being set to 51 - 100. The address of BC controller is not set to 51 - 100.	Check that the outdoor unit and BC controller addresses are set to 00 or a number between 51 and 100. If the outdoor unit address is out of the valid range, reset the address with the power to the outdoor unit turned off. If the BC controller address is out of the valid range, reset the address with the power to both the outdoor unit and BC controller turned off.

7-9-5 Error Code [7106]

1. Error code definition

Attribute setting error

2. Error source, cause, check method and remedy

After troubleshooting the error using the check methods and remedies shown below, turn the power back on.

Error source	Cause	Check method and remedy
-	A remote controller for use with indoor units, such as the MA remote controller, is connected to the OA processing unit whose attribute is FU.	To operate the OA processing unit directly via a remote controller for use with indoor units, such as the MA remote controller, set the DIP SW 3-1 on the OA processing unit to ON. Operation Method / SW3-1 Interlocked operation with the indoor unit / OFF Direct operation via the MA remote controller / ON

7-9-6 Error Code [7107]

1. Error code definition

Port setting error

2. Error definition and error detection method

The port with wrong number is connected to the indoor unit.The model total connected to the port is greater than the specification.

3. Error source, cause, check method and remedy

After troubleshooting the error using the check methods and remedies shown below, turn the power back on.

<table>
<tr><th>Error source</th><th>Cause</th><th>Check method and remedy</th></tr>
<tr><td>BC controller</td><td>(1) Model total of indoor units per each port or per each port merge is greater than the specification.
<table>
<tr><th>Total port number</th><th>Model total</th></tr>
<tr><td>Single branching</td><td>54</td></tr>
<tr><td>Two branches merge</td><td>96</td></tr>
</table>
(2) 4 or more indoor units are connected to the same port.
(3) When two ports are used, the port with the smaller number is not connected to the indoor unit.
(4) For the address of the BC controller (Sub 1 - 11), 50 is not added to the smallest indoor unit address, which is connected to the BC controller (Sub 1 - 11).
(5) In the system to which multiple BC controllers are connected, the indoor unit address connected to the BC controller is not set as shown below.
(i) The indoor unit address which is connected to the BC controller (main)
(ii) The indoor unit address which is connected to the BC controller (Sub N)
(iii) The indoor unit address which is connected to the BC controller (Sub N + 1)
Address setting
(i)<(ii)<(iii)
*(ii) and (iii) can be reversed.</td><td>Before resetting the port number using the port number setting switch or the model using the model (capacity code) setting switch, turn off the power of the outdoor unit, the BC controller and the indoor unit.</td></tr>
<tr><td></td><td colspan="2"> 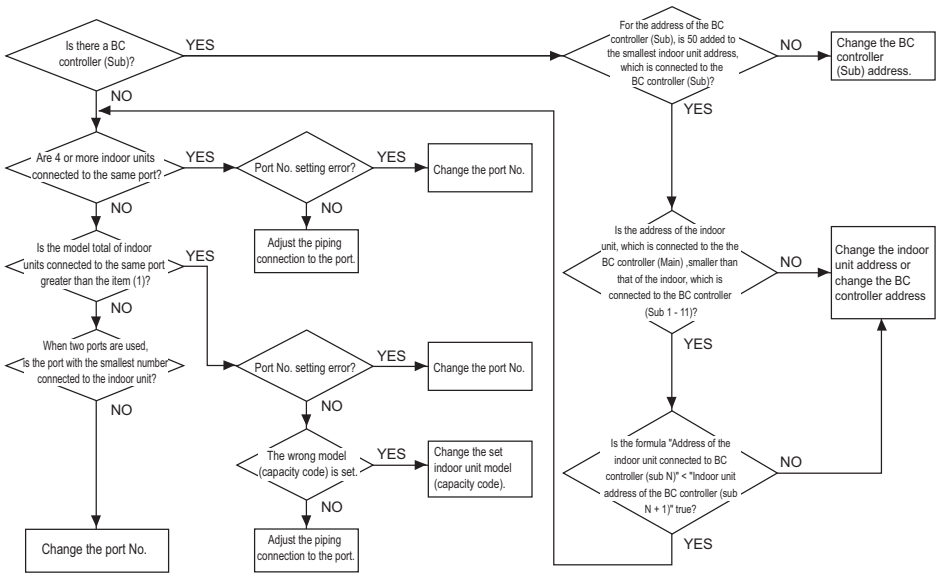
</td></tr>
</table>

7-9-7 Error Code [7110]

1. Error code definition

Connection information signal transmission/reception error

2. Error definition and error detection method

The given indoor unit is inoperable because it is not properly connected to the outdoor unit in the same system.

3. Error source, cause, check method and remedy

After troubleshooting the error using the check methods and remedies shown below, turn the power back on.

Error source	Cause	Check method and remedy
Outdoor unit	(1) Power to the transmission booster is cut off.	1) Confirm that the power to the transmission booster is not cut off by the booster being connected to the switch on the indoor unit. (The unit will not function properly unless the transmission booster is turned on.)
	(2) Power resetting of the transmission booster and outdoor unit.	→Reset the power to the outdoor unit.
	(3) Wiring failure between OC and OS	2) Confirm that the TB3 on the OC and OS are properly connected.
	(4) Broken wire between OC and OS.	3) Check the model selection switch on the outdoor unit (Dipswitch SW5-7 on the control board.).
	(5) The model selection switch (SW5-7) on the outdoor unit is set to OFF. (Normally set to ON)	

7-9-8 Error Code [7111]

1. Error code definition

Remote controller sensor fault

2. Error definition and error detection method

This error occurs when the temperature data is not sent although the remote controller sensor is specified.

3. Error source, cause, check method and remedy

After troubleshooting the error using the check methods and remedies shown below, turn the power back on.

Error source	Cause	Check method and remedy
Indoor unit OA processing unit	The remote controller without the temperature sensor (the wireless remote controller or the ME compact remote controller (mounted type)) is used and the remote controller sensor for the indoor unit is specified. (SW1-1 is ON.)	Replace the remote controller with the one with built-in temperature sensor.

7-9-9 Error Code [7113]

1. Error code definition

Function setting error (improper connection of CNTYP)

2. Error source, cause, check method and remedy

After troubleshooting the error using the check methods and remedies shown below, turn the power back on.

Error source	Cause	Check method and remedy
Outdoor unit	(1) Wiring fault (2) Loose connectors, short-circuit, contact failure (3) Incompatible control board and INV board (replacement with a wrong circuit board) (4) DIP SW setting error on the control board	(Detail code 15) 1) Check the connector CNTYP5 on the control board for proper connection. 2) Check the connector CNTYP4 on the control board for proper connection.
		(Detail code 14) 1) Check the settings of SW5-3 through SW5-6 on the control board. 2) Check the connector CNTYP4 on the control board for proper connection.
		(Detail code 12) 1) Check the settings of SW5-3 through SW5-6 on the control board. 2) Check the connector CNTYP2 on the control board for proper connection. 3) Check the connector CNTYP5 on the control board for proper connection. 4) Check the connector CNTYP on the INV board for proper connection.
		(Detail code 16) 1) Check the settings of SW5-3 through SW5-6 on the control board. 2) Check the connector CNTYP5 on the control board for proper connection. 3) Check the connector CNTYP2 on the control board for proper connection. 4) Check the wiring between the control board and INV board. Refer to the following page(s). [7-2-1 Error Code [0403]] 5) Check the connector CNTYP on the INV board for proper connection.
		(Detail codes 56, 66) 1) Check the settings of SW5-3 through SW5-6 on the control board. 2) Check the wiring between the control board and the Fan INV board. Refer to the following page(s). [7-2-1 Error Code [0403]] 3) Make sure the FAN INV board has been properly replaced.
		(Detail code 0, 1, 5, 6) 1) Check the wiring between the control board and INV board. Refer to the following page(s). [7-2-1 Error Code [0403]] 2) Check the settings of SW5-3 through SW5-6 on the control board. 3) Check the connector CNTYP5 on the control board for proper connection.
		(Detail code Miscellaneous) *If a set-model-name identification error occurs, check the detail code on the unit on which the error occurred. The detail code that appears on other units will be different from the ones shown above.

Error source	Cause	Check method and remedy
BC controller	(1) Wiring fault (2) Loose connectors, short-circuit, contact failure (3) DIP SW setting error on the control board	1) Check the connector TYP1 on the control board. 2) Check the settings of SW4-1, SW5-7, and SW5-8 on the control board.

7-9-10 Error Code [7117]

1. Error code definition

Model setting error

2. Error source, cause, check method and remedy

After troubleshooting the error using the check methods and remedies shown below, turn the power back on.

Error source	Cause	Check method and remedy
Outdoor unit	(1) Wiring fault (2) Loose connectors, short-circuit, contact failure	(Detail code 15) 1) Check the connector CNTYP5 on the control board for proper connection.
		(Detail code 14) 1) Check the connector CNTYP4 on the control board for proper connection.
		(Detail code 12) 1) Check the connector CNTYP2 on the control board for proper connection. 2) Check the connector CNTYP5 on the control board for proper connection. 3) Check the connector CNTYP on the INV board for proper connection.
		(Detail code 16) 1) Check the connector CNTYP5 on the control board for proper connection. 2) Check the connector CNTYP2 on the control board for proper connection. 3) Check the wiring between the control board and INV board. Refer to the following page(s). [7-2-1 Error Code [0403]] 4) Check the connector CNTYP on the INV board for proper connection.
		(Detail codes 56, 66) 1) Check the wiring between the control board and the Fan INV board. Refer to the following page(s). [7-2-1 Error Code [0403]] 2) Make sure the FAN INV board has been properly replaced.
		(Detail code 0, 1, 5, 6) 1) Check the wiring between the control board and INV board. Refer to the following page(s). [7-2-1 Error Code [0403]] 2) Check the settings of SW5-3 through SW5-6 on the control board. 3) Check the connector CNTYP5 on the control board for proper connection.
		(Detail code Miscellaneous) *If a set-model-name identification error occurs, check the detail code on the unit on which the error occurred. The detail code that appears on other units will be different from the ones shown above.

7-9-11 Error Code [7130]

1. Error code definition

Incompatible unit combination

2. Error definition and error detection method

The check code will appear when the indoor units and BC controller with different refrigerant systems are connected or when the combination of the outdoor units is not as per [2-1 System Configurations].

3. Error source, cause, check method and remedy

After troubleshooting the error using the check methods and remedies shown below, turn the power back on.

Error source	Cause	Check method and remedy
Outdoor unit	(1) Indoor units for use with different refrigerant systems The connected indoor unit is for use with R22 or R407C. Incorrect type of indoor units are connected. The M-NET connection adapter is connected to the indoor unit system in a system in which the Slim Model (A control) of units are connected to the M-NET.	Check the connected indoor unit model. Check whether the connecting adapter for M-NET is not connected to the indoor unit. (Connect the connecting adapter for M-NET to the outdoor unit.)
	(2) Combination of outdoor units The outdoor unit (OC) is EP192 to EP240. The combination of the outdoor units is not as per [2-1 System Configurations]. In addition, the connected outdoor units cannot mix old and new model names.	Check the model name of the outdoor units (OC) and (OS). Check whether the combination of the outdoor units is as per [2-1 System Configurations].
BC controller	Due to a function setting failure in the BC controller, the BC controller is recognized as intended for use with R22 or R407C only.	Check the connector TYP1 on the control board of the BC controller.
	(1) Wiring fault	
	(2) Loose connectors, short-circuit, contact failure	

Chapter 8 Troubleshooting Based on Observed Symptoms

8-1 MA Remote Controller Problems ... 1
8-1-1 The LCD Does Not Light Up. ... 1
8-1-2 The LCD Momentarily Lights Up and Then Goes Off. ... 2
8-1-3 "HO" and "PLEASE WAIT" Do Not Go Off the Screen. ... 3
8-1-4 Air Conditioning Units Do Not Operate When the ON Button Is Pressed. ... 4

8-2 ME remote Controller Problems ... 5
8-2-1 The LCD Does Not Light Up. ... 5
8-2-2 The LCD Momentarily Lights Up and Then Goes Off. ... 6
8-2-3 "HO" or "Waiting for …" Does Not Go Off the Screen. ... 7
8-2-4 "88", "Request denied." Appears on the LCD. ... 9

8-3 Refrigerant Control Problems ... 10
8-3-1 Units in the Cooling Mode Do Not Operate at Expected Capacity. ... 10
8-3-2 Units in the Heating Mode Do Not Operate at Expected Capacity. ... 12
8-3-3 Outdoor Units Stop at Irregular Times. ... 14

8-4 Checking Transmission Waveform and for Electrical Noise Interference ... 15
8-4-1 M-NET ... 15
8-4-2 MA Remote Controller ... 17

8-5 Pressure Sensor Circuit Configuration and Troubleshooting Pressure Sensor Problems ... 18
8-5-1 Comparing the High-Pressure Sensor Measurement and Gauge Pressure ... 18
8-5-2 High-Pressure Sensor Configuration (63HS1, PS1, PS3) ... 19
8-5-3 Comparing the Low-Pressure Sensor Measurement and Gauge Pressure ... 20
8-5-4 Low-Pressure Sensor Configuration (63LS) ... 21

8-6 Troubleshooting Solenoid Valve Problems ... 22

8-7 Troubleshooting Outdoor Unit Fan Problems ... 23

8-8 Troubleshooting LEV Problems ... 24
8-8-1 General Overview on LEV Operation ... 24
8-8-2 Possible Problems and Solutions ... 27
8-8-3 Coil Removal Instructions ... 28

8-9 Troubleshooting Problems with Major Components on BC Controller ... 30
8-9-1 Pressure Sensor ... 30
8-9-2 Temperature Sensor ... 32
8-9-3 Troubleshooting Flowchart for LEVs ... 36
8-9-4 Troubleshooting Flowchart for Solenoid Valves ... 41
8-9-5 BC Controller Transformer ... 43

8-10 Troubleshooting Inverter Problems ... 44
8-10-1 Inverter-Related Problems and Solutions ... 44
8-10-2 Checking the Inverter Board Error Detection Circuit ... 46
8-10-3 Checking the Compressor for Ground Fault and Coil Resistance Problems ... 46
8-10-4 Checking the Inverter for Damage at No-Load ... 47
8-10-5 Checking the Inverter for Damage during Compressor Operation ... 48
8-10-6 Checking the Converter for Damage during Compressor Operation ... 50
8-10-7 Checking the Fan Motor for Ground Fault and Coil Resistance Problems ... 50
8-10-8 Checking the Fan Board Error Detection Circuit at No Load ... 50
8-10-9 Checking the Fan Board for Damage at No Load ... 51
8-10-10 Checking the Fan Board for Damage with Load ... 52
8-10-11 Checking the Installation Conditions ... 53
8-10-12 Solutions for the Main Breaker Trip ... 53

8-10-13 Solutions for the Main Earth Leakage Breaker Trip 54
8-10-14 Simple Check on Inverter Circuit Components 55
8-10-15 Troubleshooting Problems with IGBT Module 56
8-10-16 Checking the Fan Inverter Heatsink for Clogging 62

8-11 Control Circuit 63
8-11-1 Control Power Supply Function Block 63
8-11-2 Troubleshooting Problems with Outdoor Unit Transmission Power Supply Circuit 69

8-12 Measures for Refrigerant Leakage 75

8-13 Parts Replacement Instructions <Type A/Type A1> 77
8-13-1 Ensuring Maintenance Space (Preparation for the Maintenance of Refrigerant Circuit Parts) <Type A/Type A1> .. 77
8-13-2 Notes on Wiring Installation <Type A> 81
8-13-3 Notes on Wiring Installation <Type A1> 86
8-13-4 Four-way Valve Replacement Procedure <Type A> 91
8-13-5 Four-way Valve Replacement Procedure <Type A1> 103
8-13-6 Replacement Procedure for the Check Valve Block Assembly <Type A> 115
8-13-7 Replacement Procedure for the Check Valve Block Assembly <Type A1> 128
8-13-8 Compressor Replacement Procedure <Type A> 141
8-13-9 Compressor Replacement Procedure <Type A1> 149
8-13-10 Removal Instructions for the Control Box <Type A/Type A1> 157
8-13-11 Transformer box replacement instructions <Type A/Type A1> 163
8-13-12 Maintenance Procedure for the Drain Pan <Type A/Type A1> 168
8-13-13 Maintenance Procedures for the Heat Exchanger <Type A/Type A1> 174
8-13-14 Accumulator Replacement Procedure <Type A> 201
8-13-15 Accumulator Replacement Procedure <Type A1> 208

8-14 BC Controller Maintenance Instructions 215

8-15 Troubleshooting Problems Using the LED Status Indicators on the Outdoor Unit 218

8-1 MA Remote Controller Problems

8-1-1 The LCD Does Not Light Up.

1. Phenomena

Even if the operation button on the remote controller is pressed, the display remains unlit and the unit does not start running. (Power indicator (◎) is unlit and no lines appear on the remote controller.)

2. Cause

1) The power is not supplied to the indoor unit.
   - The main power of the indoor unit is not on.
   - The connector on the indoor unit board has come off.
   - The fuse on the indoor unit board has melted.
   - Transformer failure and disconnected wire of the indoor unit.
2) Incorrect wiring for the MA remote controller
   - Disconnected wire for the MA remote controller or disconnected line to the terminal block.
   - Short-circuited MA remote controller wiring
   - Incorrect wiring of the MA remote controller cables
   - Incorrect connection of the MA remote wiring to the terminal block for transmission line (TB5) on the indoor unit
   - Wiring mixup between the MA remote controller cable and 220-240 VAC power supply cable
   - Reversed connection of the wire for the MA remote controller and the M-NET transmission line on the indoor unit
3) The number of the MA remote controllers that are connected to an indoor unit exceeds the allowable range (2 units).
4) The length or the diameter of the wire for the MA remote controller are out of specification.
5) Short circuit of the wire for the remote display output of the outdoor unit or reversed polarity connection of the relay.
6) The indoor unit board failure
7) MA remote controller failure

3. Check method and remedy

1) Check the voltage at the MA remote controller terminals.
   - If the voltage is between DC 9 and 12V, the remote controller is a failure.
   - If no voltage is applied, check the causes 1) and 3) and if the cause is found, correct it.
   If no cause is found, refer to 2).
2) Disconnect the remote controller cable from TB15 (MA remote controller terminal) on the indoor unit, and check the voltage across the terminals on TB15.
   - If the voltage is between DC 9 and 12 V, check the causes 2) and 4) and if the cause is found, correct it.
   - If no voltage is applied, check the cause 1) and if the cause is found, correct it.
   If no cause is found, check the wire for the remote display output (relay polarity).
   If no further cause is found, replace the indoor unit board.

8-1-2 The LCD Momentarily Lights Up and Then Goes Off.

1. Phenomena

When the remote controller operation SW is turned on, the operation status briefly appears on the display, then it goes off, and the display lights out immediately, and the unit stops.

2. Cause

1) The power for the M-NET transmission line is not supplied from the outdoor unit. For details, refer to the following page(s).[8-11-2 Troubleshooting Problems with Outdoor Unit Transmission Power Supply Circuit]
2) Short circuit of the transmission line.
3) Incorrect wiring of the M-NET transmission line on the outdoor unit.
   - Disconnected wire for the MA remote controller or disconnected line to the terminal block.
   - The indoor transmission line is connected incorrectly to the transmission terminal block for centralized controller (TB7).
   - The male power supply connectors on the multiple outdoor units are connected to the female power supply switch connector (CN40).
     In the system to which the power supply unit for transmission lines is connected, the male power supply connector is connected to the female power supply switch connector (CN40) on the outdoor unit.
4) Disconnected M-NET transmission line on the indoor unit side.
5) Disconnected wire between the terminal block for M-NET line (TB5) of the indoor unit and the indoor unit board (CN2M) or disconnected connector.

3. Check method and remedy

When 2) and 3) above apply, check code 7102 will be displayed on the self-diagnosis LED.

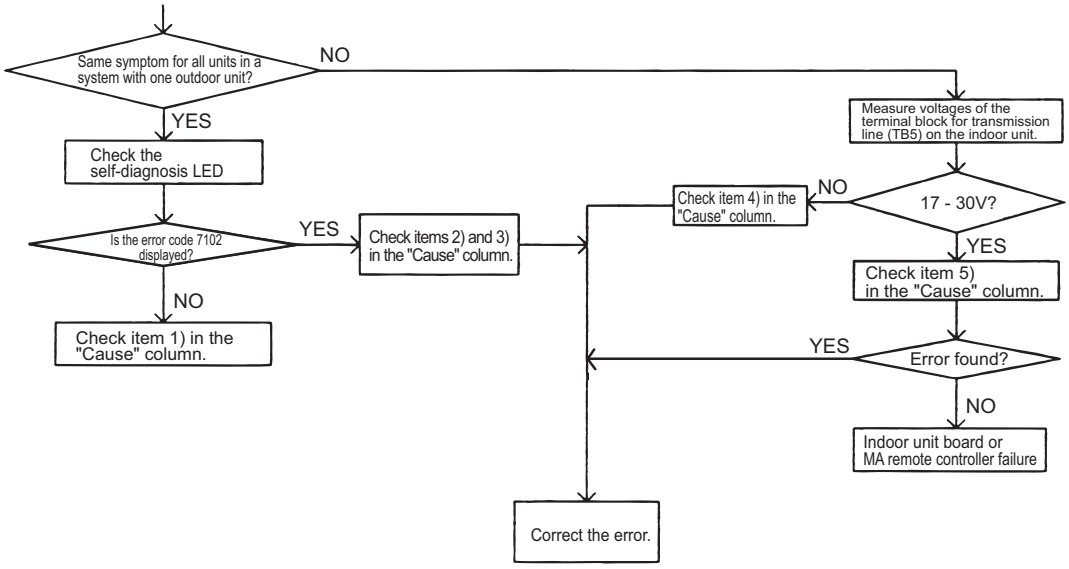

8-1-3 "HO" and "PLEASE WAIT" Do Not Go Off the Screen.

1. Phenomena

"HO" or "PLEASE WAIT" display on the remote controller does not disappear, and no operation is performed even if the button is pressed. ("HO" or "PLEASE WAIT" display will normally turn off 5 minutes later after the power on.)

2. Cause

1) The power for the M-NET transmission line is not supplied from the outdoor unit. For details, refer to the following page(s). [8-11-2 Troubleshooting Problems with Outdoor Unit Transmission Power Supply Circuit]
2) Short-circuited transmission line
3) Incorrect wiring of the M-NET transmission line on the outdoor unit.
   - Disconnected wire for the MA remote controller or disconnected line to the terminal block.
   - The indoor transmission line is connected incorrectly to the transmission terminal block for centralized controller (TB7).
   - The male power supply connectors on the multiple outdoor units are connected to the female power supply switch connector (CN40).
     In the system to which the power supply unit for transmission lines is connected, the male power supply connector is connected to the female power supply switch connector (CN40) on the outdoor unit
4) Disconnected M-NET transmission line on the indoor unit.
5) Disconnected wire between the terminal block for M-NET line (TB5) of the indoor unit and the indoor unit board (CN2M) or disconnected connector.
6) Incorrect wiring for the MA remote controller
   - Short-circuited wire for the MA remote controller
   - Disconnected wire for the MA remote controller (No.2) and disconnected line to the terminal block.
   - Reversed daisy-chain connection between groups
   - Incorrect wiring for the MA remote controller to the terminal block for transmission line connection (TB5) on the indoor unit
   - The M-NET transmission line is connected incorrectly to the terminal block (TB15) for the MA remote controller.
7) The sub/main setting of the MA remote controller is set to sub.
8) 2 or more main MA remote controllers are connected.
9) Indoor unit board failure (MA remote controller communication circuit)
10) Remote controller failure
11) Outdoor unit failure (Refer to the following page(s). [8-15 Troubleshooting Problems Using the LED Status Indicators on the Outdoor Unit])

3. Check method and remedy

When 2) and 3) above apply, check code 7102 will be displayed on the self-diagnosis LED.

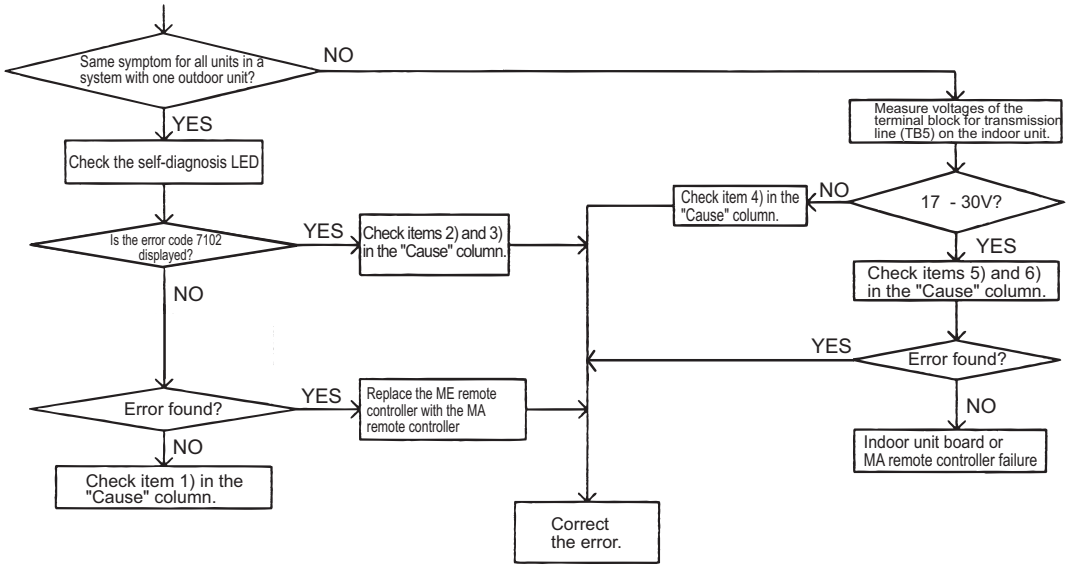

8-1-4 Air Conditioning Units Do Not Operate When the ON Button Is Pressed.

1. Phenomena

Even if the operation button on the remote controller is pressed, the indoor and the outdoor units do not start running.

2. Check method and remedy

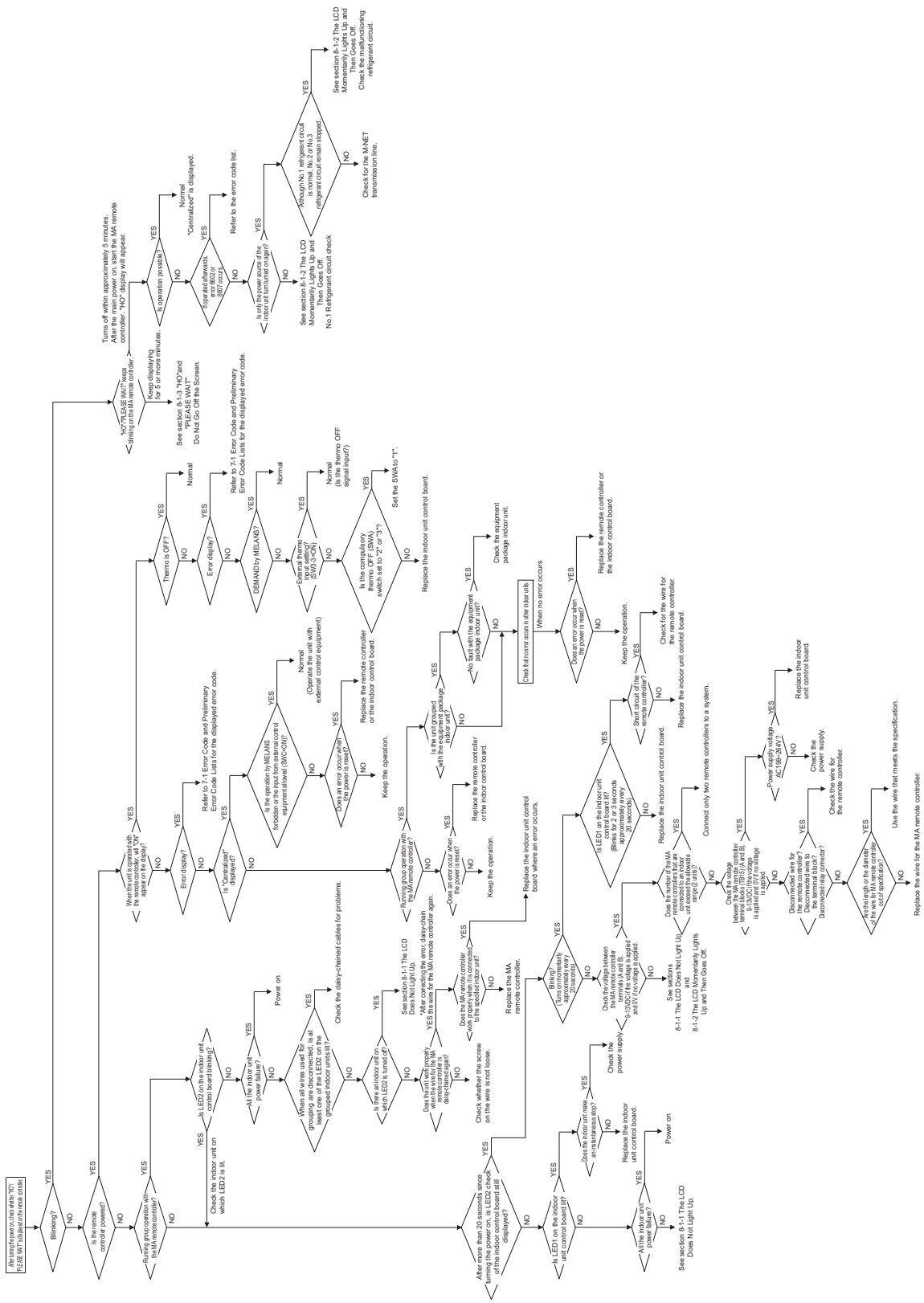

8-2 ME remote Controller Problems

8-2-1 The LCD Does Not Light Up.

1. Phenomena

Even if the operation button on the remote controller is pressed, the display remains unlit and the unit does not start running. (Remote controller is not powered.)

2. Cause

1) The power for the M-NET transmission line is not supplied from the outdoor unit.
2) Short circuit of the transmission line.
3) Incorrect wiring of the M-NET transmission line on the outdoor unit.
   - Disconnected wire for the MA remote controller or disconnected line to the terminal block.
   - The indoor transmission line is connected incorrectly to the transmission terminal block for centralized controller (TB7).
4) Disconnected transmission line on the remote controller.
5) Remote controller failure
6) Outdoor unit failure (For details, refer to the following page(s). [8-15 Troubleshooting Problems Using the LED Status Indicators on the Outdoor Unit])

3. Check method and remedy

1) Check voltage of the transmission terminal block for of the ME remote controller.
   - If voltage between is 17V and 30V → ME remote controller failure
   - When voltage is 17V or less → For details, refer to the following page(s). [8-11-2 Troubleshooting Problems with Outdoor Unit Transmission Power Supply Circuit]
2) **When 2) and 3) above apply, check code 7102 will be displayed on the self-diagnosis LED.**

8-2-2 The LCD Momentarily Lights Up and Then Goes Off.

1. Phenomena

When the remote controller operation SW is turned on, a temporary operation display is indicated, and the display lights out immediately.

2. Cause

1) The power is not supplied to the indoor unit.

- The main power of the indoor unit (208/230 VAC) is not on.
- The connector on the indoor unit board has come off.
- The fuse on the indoor unit board has melted.
- Transformer failure and disconnected wire of the indoor unit
- The indoor unit board failure

2) The outdoor control board failure

As the indoor unit does not interact with the outdoor unit, the outdoor unit model cannot be recognized.

3. Check method and remedy

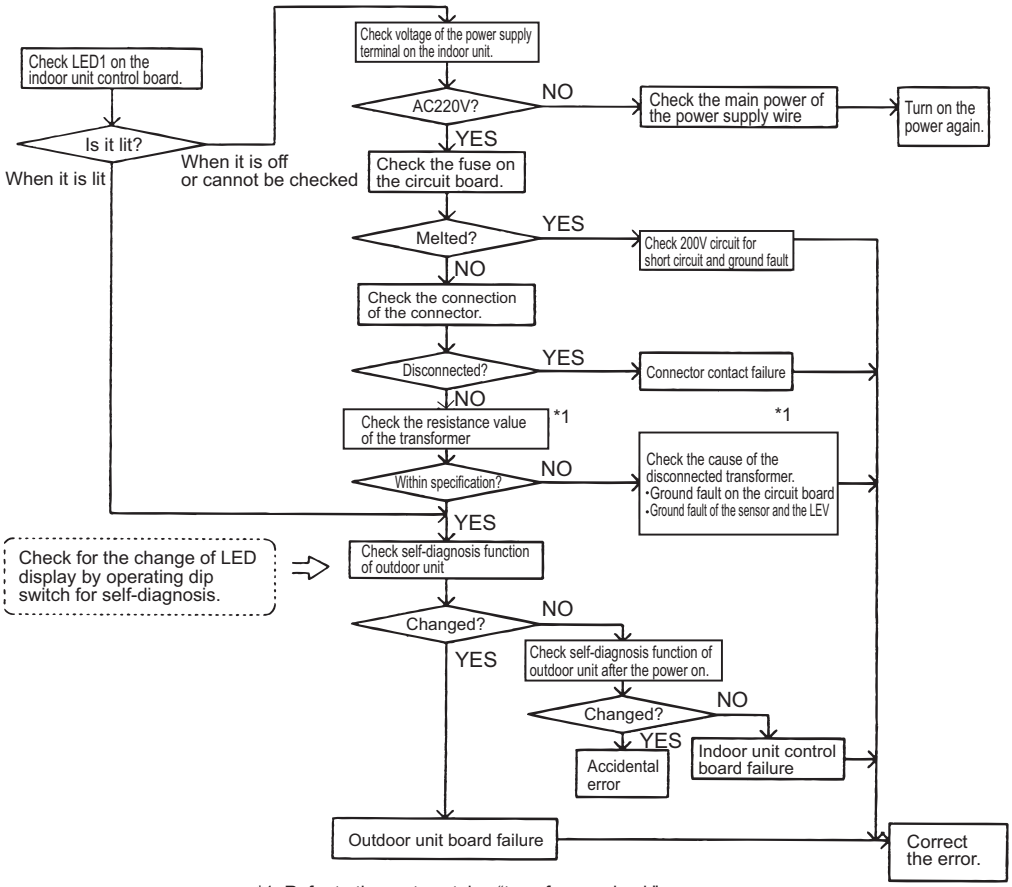

*1. Refer to the parts catalog “transformer check”.

8-2-3 "HO" or "Waiting for …" Does Not Go Off the Screen.

1. Phenomena

"HO" or "Waiting for …" display on the remote controller does not disappear, and no operation is performed even if the button is pressed.

2. Cause

Without using MELANS

1) Outdoor unit address is set to "00"
2) A wrong address is set.
   - The address of the indoor unit that is connected to the remote controller is incorrect. (It should equal the ME remote controller address minus 100.)
   - A wrong address is set to the ME remote controller. (100 must be added to the address of the indoor unit.)
3) Faulty wiring of the terminal block for transmission line (TB5) of the indoor unit in the same group with the remote controller.
4) The centralized control switch (SW5-1) on the outdoor unit is set to ON.
5) Disconnection or faulty wiring of indoor unit transmission line.
6) Disconnection between the terminal block for M-NET line connection (TB5) of the indoor unit and the male connector (CN2M)
7) The male power supply connectors on 2 or more outdoor units are connected to the female power supply switch connector (CN40) for the transmission line for centralized control.
8) Outdoor unit control board failure
9) Indoor unit control board failure
10) Remote controller failure

Interlocking control with MELANS

1) No group registration is made using MELANS. (The indoor unit and the ME remote controller are not grouped.)
2) Disconnected transmission line for centralized control (TB7) of the outdoor unit
3) The male power supply connector is connected to CN40 on more than one outdoor unit, or the connector is connected to CN40 on the outdoor unit in the system to which a power supply unit for transmission line is connected.

Using MELANS

1) When MELANS is used, "HO" or "Waiting for …" display on the remote controller will disappear when the indoor unit and the local remote controller (ME remote controller) are grouped.
   If "HO" does not disappear after the registration, check items 1) through 3) in the "Cause" column of the section on interlocked control with MELANS.

3. Check method and remedy

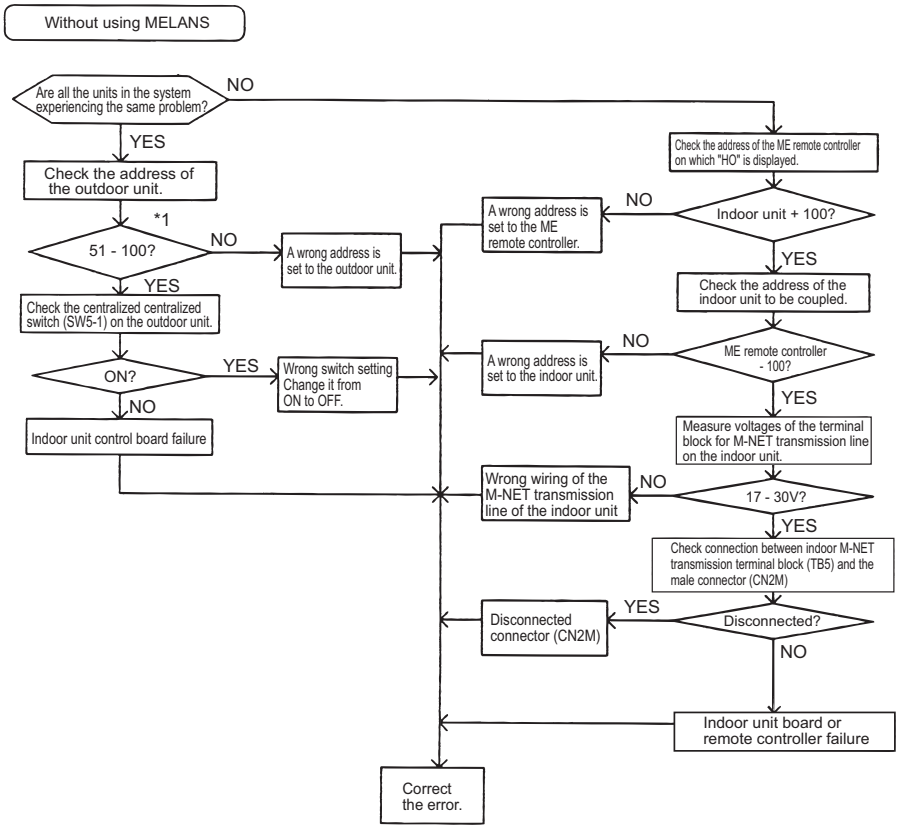

*1. When the outdoor unit address is set to 1 - 50, the address will be forcibly set to 100.

8-2-4 "88", "Request denied." Appears on the LCD.

1. Phenomena

"88", "Request denied." appears on the remote controller when the address is registered or confirmed.

2. Cause, check method and remedy

Cause	Check method and remedy
An error occurs when the address is registered or confirmed. (common)	
1. A wrong address is set to the unit to be coupled.	(1) Confirm the address of unit to be coupled.
2. The transmission line of the unit to be coupled is disconnected or is not connected.	(2) Check the connection of transmission line.
3. Circuit board failure of the unit to be coupled	(3) Check voltage of the terminal block for transmission line of the unit to be coupled. 1) Normal if voltage is between 17 and 30 VDC.
4. Improper transmission line work	2) Check (5) in case other than 1).
Generates at interlocking registration between LOSSNAY and the indoor unit	
5. The power of LOSSNAY is OFF.	(4) Check for the main power of LOSSNAY.
Generates at confirmation of controllers used in the system in which the indoor units connected to different outdoor units are grouped	
6. The power of the outdoor unit to be confirmed has been cut off.	(5) Check the power supply of the outdoor unit which is coupled with the unit to be confirmed.
7. Transmission line is disconnected from the terminal block for central control system connection (TB7) on the outdoor unit.	(6) Check that the transmission line for centralized control (TB7) of the outdoor unit is not disconnected.
8. When the indoor units connected to different outdoor units are grouped without MELANS, the male power supply connector is not connected to the female power supply switch connector (CN40) for the transmission line for centralized control.	(7) Check voltage of the transmission line for centralized control.
9. The male power supply connectors on 2 or more outdoor units are connected to the female power supply switch connector (CN40) for the transmission line for centralized control.	1) Normal when voltage is between 10V and 30V
10. In the system to which MELANS is connected, the male power supply connector is connected to the female power supply switch connector (CN40) for the transmission line for centralized control.	2) Check 8 - 11 described on the left in case other than 1).
11. Short circuit of the transmission line for centralized control	

8-3 Refrigerant Control Problems

8-3-1 Units in the Cooling Mode Do Not Operate at Expected Capacity.

1. Phenomena

Although cooling operation starts with the normal remote controller display, the capacity is not enough.

2. Cause, check method and remedy

Cause	Check method and remedy
1. Compressor frequency does not rise sufficiently. ♦Faulty detection of pressure sensor. ♦Protection works and compressor frequency does not rise due to high discharge temperature ♦Protection works and compressor frequency does not rise due to high pressure ♦Pressure drops excessively.	(1) Check pressure difference between the detected pressure by the pressure sensor and the actual pressure with self-diagnosis LED. → If the accurate pressure is not detected, check the pressure sensor. Refer to the following page(s). [8-5-1 Comparing the High-Pressure Sensor Measurement and Gauge Pressure] Note: Lower inlet pressure by the low pressure sensor than the actual pressure causes insufficient capacity. SW4 setting (SW6-10: OFF) High pressure sensor SW4 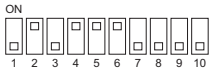 Low pressure sensor SW4 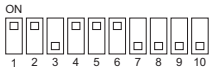 (2) Check temperature difference between the evaporating temperature (Te) and the target evaporating temperature (Tem) with self-diagnosis LED. Note: Higher Te than Tem causes insufficient capacity. SW4 setting (SW6-10: OFF) Evaporating temperature Te SW4 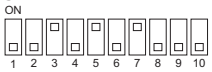 Target evaporating temperature Tem SW4 Note: Protection works and compressor frequency does not rise even at higher Te than Tem due to high discharge temperature and high pressure. At high discharge temperature: Refer to the following page(s). [7-3-1 Error Code [1102]] At high pressure: Refer to the following page(s). [7-3-3 Error Code [1302] (during operation)]
2. Indoor unit LEV malfunction ♦Insufficient refrigerant flows due to LEV malfunction (not enough opening) or protection works and compressor frequency does not rise due to pressure drop. ♦Refrigerant leak from LEV on the stopping unit causes refrigerant shortage on the running unit.	Refer to the following page(s).[8-8 Troubleshooting LEV Problems]

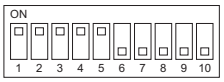

The figure at left shows that the switches 1 through 5 are set to ON and 6 through 10 are set to OFF.

Cause	Check method and remedy
3. RPM error of the outdoor unit FAN ♦Motor failure or board failure, or airflow rate decrease due to clogging of the heat exchanger ♦The fan is not properly controlled as the outdoor temperature cannot be precisely detected by the temperature sensor. ♦The fan is not properly controlled as the pressure cannot be precisely detected by the pressure sensor.	Refer to the following page(s). [8-7 Troubleshooting Outdoor Unit Fan Problems] [7-3-3 Error Code [1302] (during operation)]
4. Long piping length The cooling capacity varies greatly depending on the pressure loss. (When the pressure loss is large, the cooling capacity drops.)	Check the piping length to determine if it is contributing to performance loss. Piping pressure loss can be estimated from the temperature difference between the indoor unit heat exchanger outlet temperature and the saturation temperature (Te) of 63LS. →Correct the piping.
5. Piping size is not proper (thin)	
6. Insufficient refrigerant amount Protection works and compressor frequency does not rise due to high discharge temperature.	Refer to item 1 (Compressor frequency does not rise sufficiently.) on the previous page. Refer to the following page(s). [6-3 Evaluating and Adjusting Refrigerant Charge]
7. Clogging by foreign object	Check the temperature difference between in front of and behind the place where the foreign object is clogging the pipe (upstream side and downstream side). When the temperature drops significantly, the foreign object may clog the pipe. → Remove the foreign object inside the pipe.
8. The indoor unit inlet temperature is excessively low. (Less than 15°C [59°F] WB)	Check the inlet air temperature and for short cycling. Change the environment where the indoor unit is used.
9. Compressor failure The amount of circulating refrigerant decreases due to refrigerant leak in the compressor.	Check the discharge temperature to determine if the refrigerant leaks, as it rises if there is a leak.
10. BC controller LEV 3 actuation failure Sufficient liquid refrigerant is not be supplied to the indoor unit as sufficient sub cool cannot be secured due to LEV3 malfunction.	Refer to the following page(s).[8-8 Troubleshooting LEV Problems] It most likely happens when there is little difference or no difference between TH12 and TH15.
11. BC controller LEV4 operation failure (BC controller on JA and KA types only) LEV4 fails to close, preventing BC controller from ensuring sufficient subcool. As a result, the indoor unit is not supplied with a sufficient amount of liquid refrigerant.	Refer to the following page(s).[8-8 Troubleshooting LEV Problems] This problem may occur when SC16 and SH2 are small and when the difference between TH5 of the outdoor unit and the evaporation temperature (Te) is small.
12. TH12, TH15 and 63HS1 sensor failure or faulty wiring LEV3 is not controlled normally.	♦Check the thermistor. ♦Check wiring.
13. The restrictions on pipe lengths have not been observed	Refer to the following page(s). [2-10 Restrictions on Refrigerant Pipes]
14. LEV9 malfunction Not enough refrigerant is provided to the indoor or outdoor unit due to high-low pressure bypass that results from the malfunction of LEV9.	Refer to the following page(s). [8-8 Troubleshooting LEV Problems]
15. Open phase in the power-supply due to improper power-supply wiring	Make sure that the power-supply wiring is properly connected. (Refer to item (6) in section [6-1 Read before Test Run].) Possible open phase.

8-3-2 Units in the Heating Mode Do Not Operate at Expected Capacity.

1. Phenomena

Although heating operation starts with the normal remote controller display, the capacity is not enough.

2. Cause, check method and remedy

Cause	Check method and remedy
1. Compressor frequency does not rise sufficiently. ♦Faulty detection of pressure sensor. ♦Protection works and compressor frequency does not rise due to high discharge temperature ♦Protection works and compressor frequency does not rise due to high pressure.	(1) Check pressure difference between the detected pressure by the pressure sensor and the actual pressure with self-diagnosis LED. → If the accurate pressure is not detected, check the pressure sensor. Refer to the following page(s). [8-5-1 Comparing the High-Pressure Sensor Measurement and Gauge Pressure] Note: Higher inlet pressure by the high pressure sensor than the actual pressure causes insufficient capacity. SW4 setting (SW6-10: OFF) High pressure sensor SW4 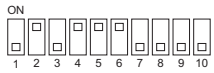 Low pressure sensor SW4 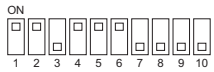 (2) Check the difference between the condensing temperature (Tc) and the target condensing temperature (Tcm) with self-diagnosis LED. Note: Higher Tc than Tcm causes insufficient capacity. SW4 setting (SW6-10: OFF) Condensing temperature Tc SW4 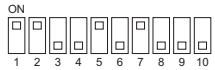 Target condensing temperature Tcm SW4 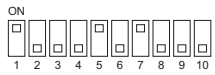 Note: Protection works and compressor frequency does not rise even at lower Tc than Tcm due to high discharge temperature and high pressure. At high discharge temperature: Refer to the following page(s). [7-3-1 Error Code [1102]] At high pressure: Refer to the following page(s). [7-3-3 Error Code [1302] (during operation)]

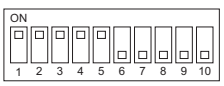

The figure at left shows that the switches 1 through 5 are set to ON and 6 through 10 are set to OFF.

Cause	Check method and remedy
2. Indoor unit LEV malfunction Insufficient refrigerant flows due to LEV malfunction (not enough opening).	Refer to the following page(s).[8-8 Troubleshooting LEV Problems]
3. Temperature reading error on the indoor unit piping temperature sensor If the temperature reading on the sensor is higher than the actual temperature, it makes the subcool seem smaller than it is, and the LEV opening decreases too much.	Check the thermistor.
4 RPM error of the outdoor unit FAN ♦Motor failure or board failure, or airflow rate decrease, pressure drop due to clogging of the heat exchanger leading to high discharge temperature ♦The fan is not properly controlled as the temperature cannot be precisely detected with the piping sensor.	Refer to the following page(s). [8-7 Troubleshooting Outdoor Unit Fan Problems]
5. Insulation failure of the refrigerant piping	
6. Long piping length Excessively long piping on the high pressure side causes pressure loss leading to increase in the high pressure.	Confirm that the characteristic of capacity drop due to piping length. → Change the pipe
7. Piping size is not proper (thin)	
8. Clogging by foreign object	Check the temperature difference between the upstream and the downstream of the pipe section that is blocked. Since blockage in the extended section is difficult to locate, operate the unit in the cooling cycle, and follow the same procedures that are used to locate the blockage of pipe during cooling operation. → Remove the blockage in the pipe.
9. The indoor unit inlet temperature is excessively high.(exceeding 28°C [82°F])	Check the inlet air temperature and for short cycling. Change the environment where the indoor unit is used.
10. Insufficient refrigerant amount Protection works and compressor frequency does not rise due to low discharge temperature Refrigerant recovery operation is likely to start.	Refer to item 1 (Compressor frequency does not rise sufficiently.) on the previous page. Refer to the following page(s). [6-3 Evaluating and Adjusting Refrigerant Charge]
11. Compressor failure (same as in case of cooling)	Check the discharge temperature.
12. BC controller LEV3 or LEV4 actuation failure A drop in the low pressure that is caused either by a blockage of liquid pipe or by a pressure loss and the resultant slowing of refrigerant flow causes a tendency for the discharge temperature to rise.	Refer to the following page(s). [8-8 Troubleshooting LEV Problems]
13. LEV9 malfunction Not enough refrigerant is provided to the indoor or outdoor unit due to high-low pressure bypass that results from the malfunction of LEV9.	Refer to the following page(s). [8-8 Troubleshooting LEV Problems]
14. Open phase in the power-supply due to improper power-supply wiring	Make sure that the power-supply wiring is properly connected. (Refer to item (6) in section [6-1 Read before Test Run].) Possible open phase.

8-3-3 Outdoor Units Stop at Irregular Times.

1. Phenomena

Outdoor unit stops at times during operation.

2. Cause, check method and remedy

Cause		Check method and remedy	
	The first stop is not considered as an error, as the unit turns to anti-restart mode for 3 minutes as a preliminary error.	(1)	Check the mode operated in the past by displaying preliminary error history on LED display with SW4.
	Error mode		
1.	Abnormal high pressure	(2)	Reoperate the unit to find the mode that stops the unit by displaying preliminary error history on LED display with SW4.
2.	Abnormal discharge air temperature		
3.	Heatsink thermistor failure		→ Refer to the reference page for each error mode. *Display the indoor piping temperature with SW4 to check whether the freeze proof operation runs properly, and check the temperature.
4.	Thermistor failure		
5.	Pressure sensor failure		Refer to the following page(s). [10 LED Status Indicators on the Outdoor Unit Circuit Board]
6.	Over-current break		
7.	Refrigerant overcharge		
8.	Refrigerant cooling error		
Note1:	Frost prevention tripping only under cooling mode may be considered in addition to the above. (Freeze protection is detected by one or all indoor units.)		
Note2:	Even the second stop is not considered as an error when some specified errors occur. (eg. The third stop is considered as an error when the thermistor error occurs.)		

8-4 Checking Transmission Waveform and for Electrical Noise Interference

8-4-1 M-NET

Control is performed by exchanging signals between the outdoor unit and the indoor unit (ME remote controller) through M-NET transmission. Noise interference on the transmission line will interrupt the normal transmission, leading to erroneous operation.

(1) Symptoms caused by noise interference on the transmission line

Cause	Erroneous operation	Error code	Error code definition
Noise interference on the transmission line	Signal is transformed and will be misjudged as the signal of another address.	6600	Address overlap
	Transmission wave pattern is transformed due to the noise creating a new signal	6602	Transmission processor hardware error
	Transmission wave pattern is transformed due to the noise, and will not be received normally leading to no acknowledgement (ACK).	6607	No ACK error
	Transmission cannot be performed due to the fine noise.	6603	Transmission line bus busy error
	Transmission is successful; however, the acknowledgement (ACK) or the response cannot be received normally due to the noise.	6607 6608	No ACK error No response error

(2) Wave shape check

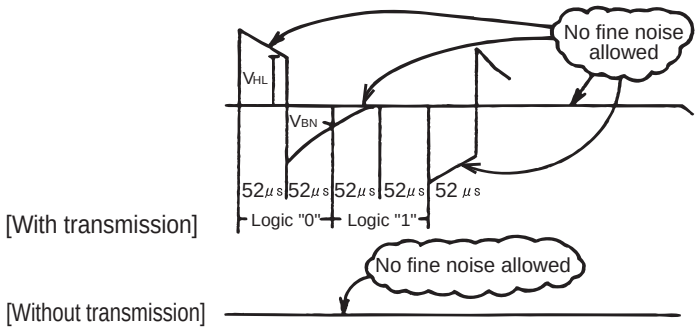

Wave shape check

Check the wave pattern of the transmission line with an oscilloscope. The following conditions must be met.

1) Small wave pattern (noise) must not exist on the transmission signal. (Minute noise (approximately 1V) can be generated by DC-DC converter or the inverter operation; however, such noise is not a problem when the shield of the transmission line is grounded.)
2) The sectional voltage level of transmission signal should be as follows.

Logic	Voltage level of the transmission line
0	V_{HL} = 2.5V or higher
1	V_{BN} = 1.3V or below

(3) Check method and remedy

1) Measures against noise
Check the followings when noise exists on the wave or the errors described in (1) occur.

	Error code definition	Remedy
Check that the wiring work is performed according to wiring specifications.	1. The transmission line and the power line are not wired too closely.	Isolate the transmission line from the power line (5cm [1-31/32"] or more). Do not insert them in the same conduit.
	2. The transmission line is not bundled with that for another systems.	The transmission line must be isolated from another transmission line. When they are bundled, erroneous operation may be caused.
	3. The specified wire is used for the transmission line.	Use the specified transmission line. Type: Shielded wire CVVS/CPEVS/MVVS (For ME remote controller) Diameter: 1.25mm^2 [AWG16] or more (Remote controller wire: 0.3 - 1.25mm^2 [AWG22-16])
	4. When the transmission line is daisy-chained on the indoor unit terminals, are the shields daisy-chained on the terminals, too?	The transmission is two-wire daisy-chained. The shielded wire must be also daisy-chained. When the shielded cable is not daisy-chained, the noise cannot be reduced enough.
Check that the grounding work is performed according to grounding specifications.	5. Is the shield of the indoor-outdoor transmission cable grounded to the earth terminal on the outdoor unit?	Connect the shield of the indoor-outdoor transmission cable to the earth terminal (⏚) on the outdoor unit. If no grounding is provided, the noise on the transmission line cannot escape leading to change of the transmission signal.
	6. Check the treatment method of the shield of the transmission line (for centralized control).	The transmission cable for centralized control is less subject to noise interference if it is grounded to the outdoor unit whose power jumper cable was moved from CN41 to CN40 or to the power supply unit. The environment against noise varies depending on the distance of the transmission lines, the number of the connected units, the type of the controllers to be connected, or the environment of the installation site. Therefore, the transmission line work for centralized control must be performed as follows. (1) When no grounding is provided: Ground the shield of the transmission cable by connecting to the outdoor unit whose power jumper connector was moved from CN41 to CN40 or to the power supply unit. (2) When an error occurs even though one point grounding is provided: Ground the shield on all outdoor units.

2) Check the followings when the error "6607" occurs, or "HO" appears on the display on the remote controller.

Error code definition	Remedy
7. The farthest distance of transmission line is 200m [656ft] or longer.	Check that the farthest distance from the outdoor unit to the indoor unit and to the remote controller is within 200m [656ft].
8. The types of transmission lines are different.	Use the specified transmission line. Type: Shielded wire CVVS/CPEVS/MVVS (For ME remote controller) Diameter: 1.25mm^2 [AWG16] or more (Remote controller wire: 0.3-1.25mm^2 [AWG22-16])
9. Outdoor unit circuit board failure	Replace the outdoor unit control board or the power supply board for the transmission line.
10. Indoor unit circuit board failure or remote controller failure	Replace the indoor unit circuit board or the remote controller.
11. The MA remote controller is connected to the M-NET transmission line.	Connect the MA remote controller to the terminal block for MA remote controller (TB15).

8-4-2 MA Remote Controller

The communication between the MA remote controller and the indoor unit is performed with current tone burst.

(1) Symptoms caused by noise interference on the transmission line

If noise is generated on the transmission line, and the communication between the MA remote controller and the indoor unit is interrupted for 3 minutes in a row, MA transmission error (6831) will occur.

(2) Confirmation of transmission specifications and wave pattern

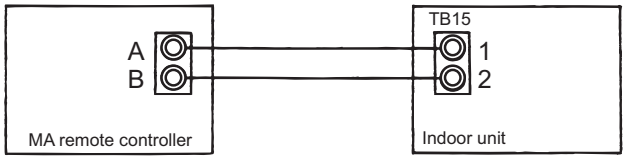

A, B : No polarity
Across terminal No. 1-2
: Power supply (9V to 12VDC)

Transmission waveform (Across terminal No.1 - 2)

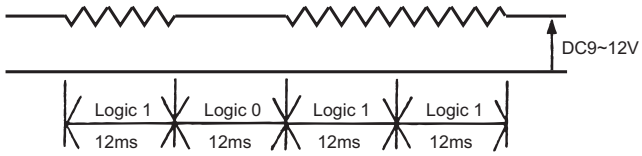

① Satisfies the formula
12 ms/bit ±5%
② Voltage among terminals must be between DC9 and 12 V.

8-5 Pressure Sensor Circuit Configuration and Troubleshooting Pressure Sensor Problems

8-5-1 Comparing the High-Pressure Sensor Measurement and Gauge Pressure

By configuring the digital display setting switch (SW4 (when SW6-10 is set to OFF)) as shown in the figure below, the pressure as measured by the high-pressure sensor appears on the LED1 on the control board.

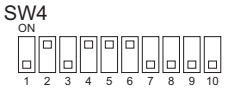

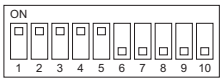

The figure at left shows that the switches 1 through 5 are set to ON and 6 through 10 are set to OFF.

(1) While the sensor is stopped, compare the gauge pressure and the pressure displayed on self-diagnosis LED1.

1) When the gauge pressure is between 0 and 0.098MPa [14psi], internal pressure is caused due to gas leak.
2) When the pressure displayed on self-diagnosis LED1 is between 0 and 0.098MPa [14psi], the connector may be defective or be disconnected. Check the connector and go to (4).
3) When the pressure displayed on self-diagnosis LED1 exceeds 4.15MPa [601psi], go to (3).
4) If other than 1), 2) or 3), compare the pressures while the sensor is running. Go to (2).

(2) Compare the gauge pressure and the pressure displayed on self-diagnosis LED1 while the sensor is running. (Compare them by MPa [psi] unit.)

1) When the difference between both pressures is within 0.098MPa [14psi], both the high pressure sensor and the control board are normal.
2) When the difference between both pressures exceeds 0.098MPa [14psi], the high pressure sensor has a problem. (performance deterioration)
3) When the pressure displayed on self-diagnosis LED1 does not change, the high pressure sensor has a problem.

(3) Remove the high pressure sensor from the control board to check the pressure on the self-diagnosis LED1.

1) When the pressure displayed on self-diagnosis LED1 is between 0 and 0.098MPa [14psi], the high pressure sensor has a problem.
2) When the pressure displayed on self-diagnosis LED1 is approximately 4.15MPa [601psi], the control board has a problem.

(4) Remove the high pressure sensor from the control board, and short-circuit between the No.2 and 3 connectors (63HS1, PS1, PS3) to check the pressure with self-diagnosis LED1.

1) When the pressure displayed on the self-diagnosis LED1 exceeds 4.15MPa [601psi], the high pressure sensor has a problem.
2) If other than 1), the control board has a problem.

8-5-2 High-Pressure Sensor Configuration (63HS1, PS1, PS3)

The high pressure sensor consists of the circuit shown in the figure below. If DC 5V is applied between the red and the black wires, voltage corresponding to the pressure between the white and the black wires will be output, and the value of this voltage will be converted by the microcomputer. The output voltage is 0.071V per 0.098MPa [14psi].

Note

The pressure sensor on the body side is designed to connect to the connector. The connector pin number on the body side is different from that on the control board side.

	Body side	Control board side
Vcc	Pin 1	Pin 3
Vout	Pin 2	Pin 2
GND	Pin 3	Pin 1

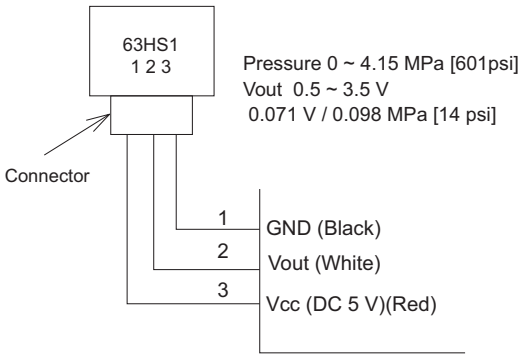

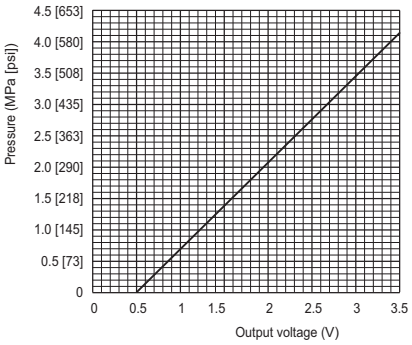

8-5-3 Comparing the Low-Pressure Sensor Measurement and Gauge Pressure

By configuring the digital display setting switch (SW4 (when SW6-10 is set to OFF)) as shown in the figure below, the pressure as measured by the low-pressure sensor appears on the LED1 on the control board.

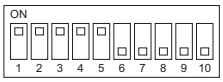

The figure at left shows that the switches 1 through 5 are set to ON and 6 through 10 are set to OFF.

(1) While the sensor is stopped, compare the gauge pressure and the pressure displayed on self-diagnosis LED1.

1) When the gauge pressure is between 0 and 0.098MPa [14psi], internal pressure is caused due to gas leak.
2) When the pressure displayed on self-diagnosis LED1 is between 0 and 0.098MPa [14psi], the connector may be defective or be disconnected. Check the connector and go to (4).
3) When the pressure displayed on self-diagnosis LED1 exceeds 1.7MPa [247psi], go to (3).
4) If other than 1), 2) or 3), compare the pressures while the sensor is running. Go to (2).

(2) Compare the gauge pressure and the pressure displayed on self-diagnosis LED1 while the sensor is running. (Compare them by MPa [psi] unit.)

1) When the difference between both pressures is within 0.03MPa [4psi], both the low pressure sensor and the control board are normal.
2) When the difference between both pressures exceeds 0.03MPa [4psi], the low pressure sensor has a problem. (performance deterioration)
3) When the pressure displayed on the self-diagnosis LED1 does not change, the low pressure sensor has a problem.

(3) Remove the low pressure sensor from the control board to check the pressure with the self-diagnosis LED1 display.

1) When the pressure displayed on the self-diagnosis LED1 is between 0 and 0.098MPa [14psi], the low pressure sensor has a problem.
2) When the pressure displayed on self-diagnosis LED1 is approximately 1.7MPa [247psi], the control board has a problem.
   - When the outdoor temperature is 30°C [86°F] or less, the control board has a problem.
   - When the outdoor temperature exceeds 30°C [86°F], go to (5).

(4) Remove the low pressure sensor from the control board, and short-circuit between the No.2 and 3 connectors (63LS:CN202) to check the pressure with the self-diagnosis LED1.

1) When the pressure displayed on the self-diagnosis LED1 exceeds 1.7MPa [247psi], the low pressure sensor has a problem.
2) If other than 1), the control board has a problem.

(5) Remove the high pressure sensor (63HS1) from the control board, and insert it into the connector for the low pressure sensor (63LS) to check the pressure with the self-diagnosis LED1.

1) When the pressure displayed on the self-diagnosis LED1 exceeds 1.7MPa [247psi], the control board has a problem.
2) If other than 1), the low-pressure sensor has a problem.

8-5-4 Low-Pressure Sensor Configuration (63LS)

The low pressure sensor consists of the circuit shown in the figure below. If DC5V is applied between the red and the black wires, voltage corresponding to the pressure between the white and the black wires will be output, and the value of this voltage will be converted by the microcomputer. The output voltage is 0.173V per 0.098MPa [14psi].

Note

The pressure sensor on the body side is designed to connect to the connector. The connector pin number on the body side is different from that on the control board side.

	Body side	Control board side
Vcc	Pin 1	Pin 3
Vout	Pin 2	Pin 2
GND	Pin 3	Pin 1

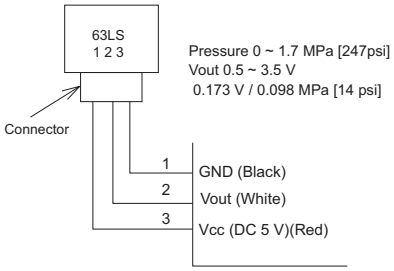

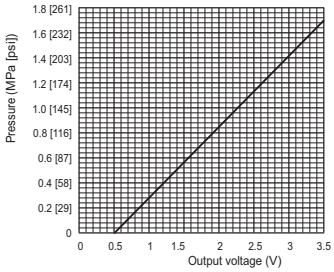

8-6 Troubleshooting Solenoid Valve Problems

Check whether the output signal from the control board and the operation of the solenoid valve match.
Setting the self-diagnosis switch (SW4) as shown in the figure below causes the ON signal of each relay to be output to the LED's.
Each LED shows whether the relays for the following parts are ON or OFF. LEDs light up when relays are on.

Note

The circuits on some parts are closed when the relays are ON. Refer to the following instructions.

SW4 (SW6-10:OFF)		Display							
		LD1	LD2	LD3	LD4	LD5	LD6	LD7	LD8
SW4	Upper	21S4a				SV1a		SV2	
	Lower			21S4b					
SW4	Upper					21S4c			
	Lower								

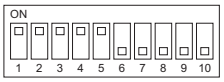

The figure at left shows that the switches 1 through 5 are set to ON and 6 through 10 are set to OFF.

- When a valve malfunctions, check if the wrong solenoid valve coil is not attached the lead wire of the coil is not disconnected, the connector on the board is not inserted wrongly, or the wire for the connector is not disconnected.

(1) In case of 21S4a, 21S4b, 21S4c (4-way switching valve)

About this 4-way valve
When not powered:
Conducts electricity between the oil separator outlet and heat exchanger AND the gas ball valve (BV1) and the accumulator to complete the circuit for the cooling cycle.
When powered:
The electricity runs between the oil separator and the gas ball valve, and between the heat exchanger and the accumulator. This circulation is for heating.

Check the LED display and the intake and the discharge temperature for the 4-way valve to check whether the valve has no faults and the electricity runs between where and where.Do not touch the pipe when checking the temperature, as the pipe on the oil separator side will be hot. (Before checking the inlet and outlet temperatures, check that LEV2a, LEV2b, and LEV2c are open. Refer to [8-8 Troubleshooting LEV Problems].)

Note

Do not give an impact from outside, as the outer hull will be deformed leading to the malfunction of the inner valve.

(2) In case of SV1a (Bypass valve)

This solenoid valve opens when powered (Relay ON).

1) At compressor start-up, the SV1a turns on for 4 minutes, and the operation can be checked by the self-diagnosis LED display and the closing sound.
2) To check whether the valve is open or closed, check the change of the SV1a downstream piping temperature while the valve is being powered.Even when the valve is closed, high-temperature refrigerant flows inside the capillary next to the valve. (Therefore, temperature of the downstream piping will not be low with the valve closed.)

(3) In the case of SV2 (Bypass valve)

This solenoid valve opens when powered (Relay ON).

The relay turns on in the following cases:

- 63HS1 is above 3.43 MPa (497 psi) even when the compressor operates at the minimum frequency in the heating-only or heating-main mode.
- 63LS is below 0.25 MPa (36 psi) and 63HS is below 1.47 MPa (213 psi) within 8 minutes after the recovery from defrosting in the heating-only or heating-main mode, or 3 minutes after and within 12 minutes after the start of the compressor. To see whether the valve is open or closed, check the change in the SV2 downstream piping temperature while the valve is being powered. Do not touch the pipe to check the valve status because hot gas flows while the valve is open.

8-7 Troubleshooting Outdoor Unit Fan Problems

(1) Fan motor (common items)

- The number of revolutions of the outdoor fan is controlled by inverter. Check the number of revolutions of the fan while monitoring the inverter output indicated by the self-diagnosis LED.
- When starting the fan, the fan runs at full speed for 5 seconds.
- When setting the DIP SW4 (when SW6-10 is set to OFF) as shown in the figure below, the inverter output [%] will appear. 100% indicates the full speed and 0% indicates the stopping. (Fan 2 is only on the (E)P96 - (E)P168, EP192 - EP240 models.)

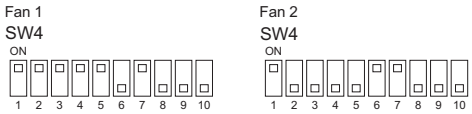

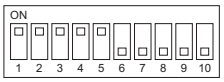

The figure at left shows that the switches 1 through 5 are set to ON and 6 through 10 are set to OFF.

- As the revolution of the fan changes under control, at the interphase or when the indoor unit operation capacity is low, the revolution of the fan may change.
- If the fan does not move or it vibrates, Fan board problem or fan motor problem is suspected. When checking the fan motor for problems by shutting down the power, be sure to disconnect the motor wire from the fan board. If a short-circuited fan board malfunctions, it will keep the fan motor from rotating smoothly. For details, refer to the following page(s).

[8-10-7 Checking the Fan Motor for Ground Fault and Coil Resistance Problems]
[8-10-8 Checking the Fan Board Error Detection Circuit at No Load]
[8-10-9 Checking the Fan Board for Damage at No Load]
[8-10-10 Checking the Fan Board for Damage with Load]

8-8 Troubleshooting LEV Problems

8-8-1 General Overview on LEV Operation

LEV operation

LEV are stepping-motor-driven valves that operate by receiving the pulse signals from the indoor and outdoor unit control boards.

(1) Outdoor LEV (LEV2a, 2b, 2c, and 2d), Indoor LEV and BC controller LEV

The valve opening changes according to the number of pulses.

1) Control boards (indoor unit) and LEV (indoor unit LEV and BC controller LEV 3 (KB type))

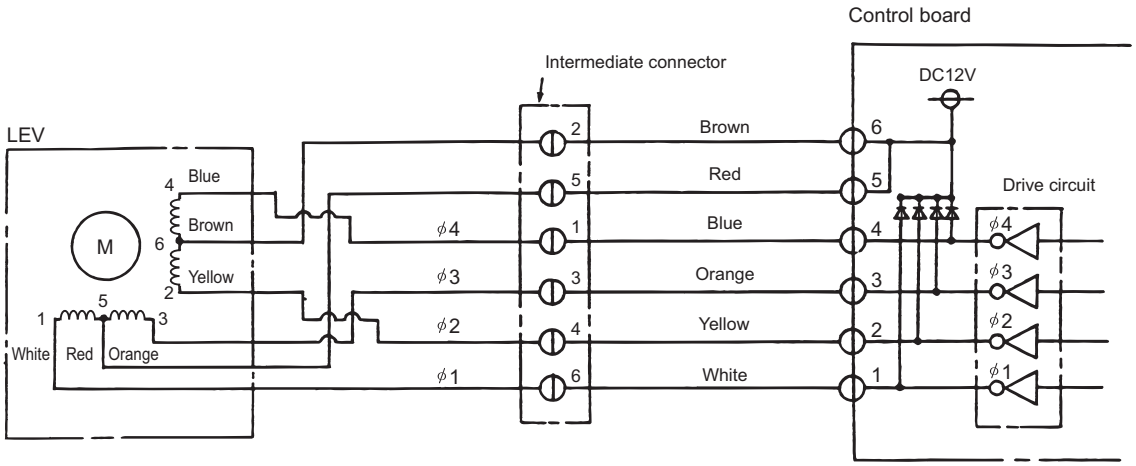

Note. The connector numbers on the intermediate connector and the connector on the control board differ. Check the color of the lead wire to judge the number.

2) Control boards (outdoor unit and BC controller), LEV (BC controller LEV1, LEV3 (J, JA, KA types), LEV4) and the outdoor unit LEV (LEV2a, 2b, 2c, and 2d)

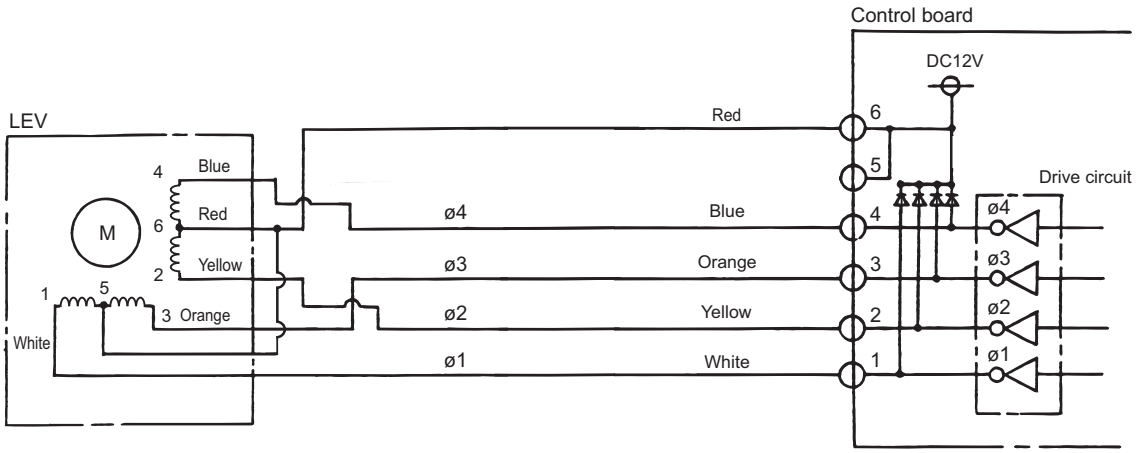

3) Pulse signal output and valve operation

Output (phase) number	Output state			
	1	2	3	4
ϕ1	ON	OFF	OFF	ON
ϕ2	ON	ON	OFF	OFF
ϕ3	OFF	ON	ON	OFF
ϕ4	OFF	OFF	ON	ON

Output pulses change in the following orders when the
Valve is closed; 1 → 2 → 3 → 4 → 1
Valve is open; 4 → 3 → 2 → 1 → 4

*1. When the LEV opening angle does not change, all the output phases will be off.
*2. When the output is open phase or remains ON, the motor cannot run smoothly, and rattles and vibrates.

4) LEV valve closing and opening operation

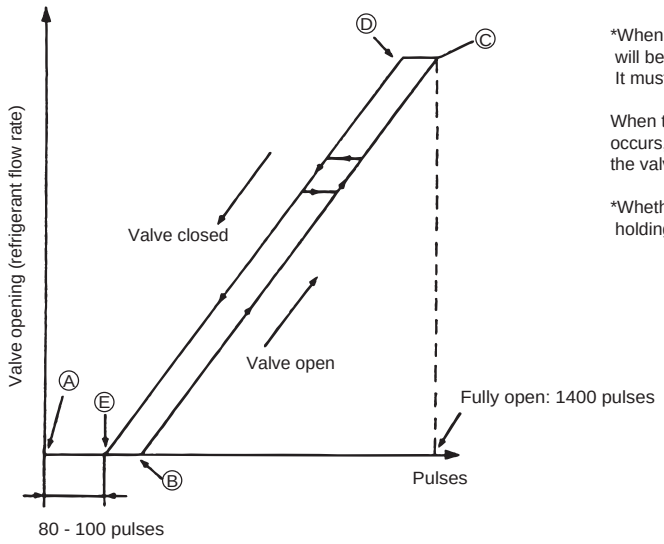

*When the power is turned on, the valve closing signal of 2200 pulses will be output from the indoor board to LEV to fix the valve position. It must be fixed at point Ⓐ

When the valve operates smoothly, no sound from LEV or no vibration occurs, however, when the pulses change from Ⓔ to Ⓐ in the chart or the valve is locked, a big sound occurs.

*Whether a sound is generated or not can be determined by holding a screwdriver against it, then placing your ear against the handle.

(2) Outdoor LEV (LEV4, LEV9)

The valve opening changes according to the number of pulses.

1) Connections between the outdoor control board and LEV9 (outdoor expansion valve)

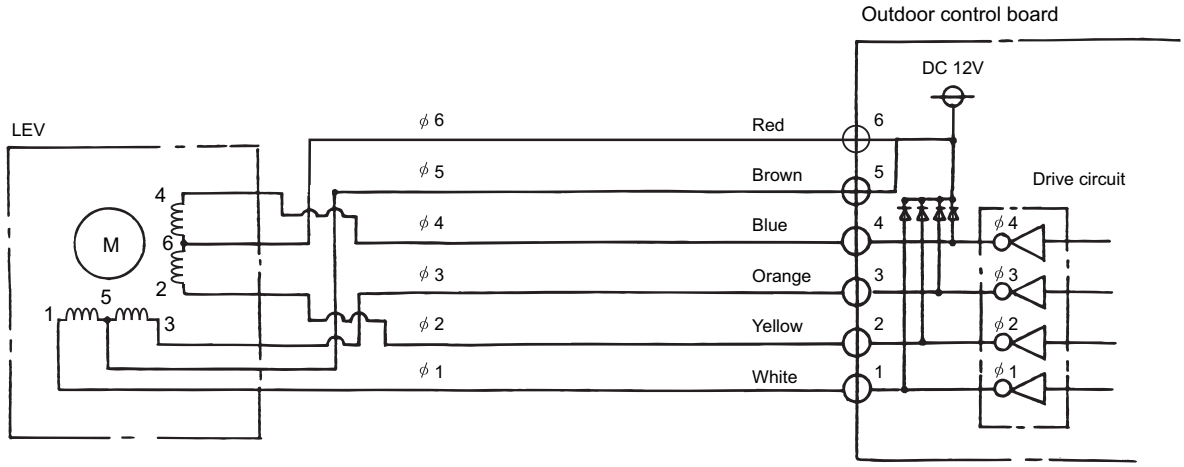

2) Pulse signal output and valve operation

Output (phase) number	Output state							
	1	2	3	4	5	6	7	8
φ1	ON	OFF	OFF	OFF	OFF	OFF	ON	ON
φ2	ON	ON	ON	OFF	OFF	OFF	OFF	OFF
φ3	OFF	OFF	ON	ON	ON	OFF	OFF	OFF
φ4	OFF	OFF	OFF	OFF	ON	ON	ON	OFF

Output pulses change in the following orders when the
Valve is open; 1 → 2 → 3 → 4 → 5 → 6 → 7 → 8 → 1
Valve is closed; 8 → 7 → 6 → 5 → 4 → 3 → 2 → 1 → 8

*1. When the LEV opening angle does not change, all the output phases will be off.

*2. When the output is open phase or remains ON, the motor cannot run smoothly, and rattles and vibrates.

3) LEV valve closing and opening operation

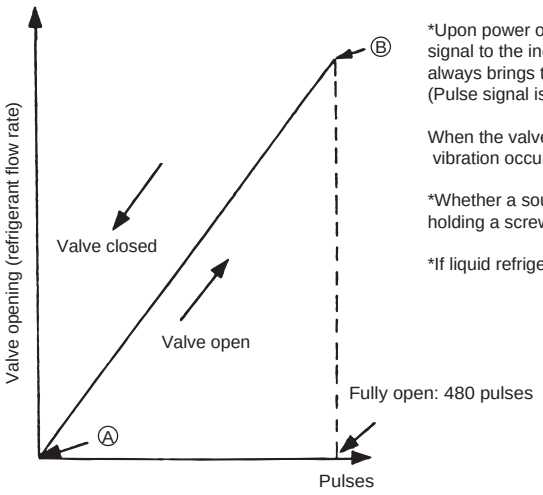

*Upon power on, the indoor unit circuit board sends a 520 pulse signal to the indoor unit LEV to determine the valve position and always brings the valve to the position as indicated by "Ⓐ" in the diagram. (Pulse signal is output for approximately 17 seconds.)

When the valve operates smoothly, there is no sound from the LEV and no vibration occurs, but when the valve is locked, noise is generated.

*Whether a sound is generated or not can be determined by holding a screwdriver against it, then placing your ear against the handle.

*If liquid refrigerant flows inside the LEV, the sound may become smaller.

8-8-2 Possible Problems and Solutions

Malfunction mode	Judgment method	Remedy	LEV
Microcomputer driver circuit failure	Disconnect the control board connector and connect the check LED as shown in the figure below. 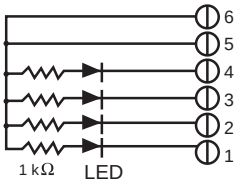 resistance : 0.25W 1kΩ LED : DC15V 20mA or more When the main power is turned on, the indoor unit circuit board outputs pulse signals to the indoor unit LEV for 10 seconds. If any of the LED remains lit or unlit, the drive circuit is faulty.	When the drive circuit has a problem, replace the control board.	Indoor unit, Outdoor unit and BC controller
LEV mechanism is locked	If the LEV is locked, the drive motor runs idle, and makes a small clicking sound. When the valve makes a closing and opening sound, the valve has a problem.	Replace the LEV.	Indoor unit, Outdoor unit and BC controller
Disconnected or short-circuited LEV motor coil	Measure resistance between the coils (red - white, red -orange, red - yellow, red - blue) using a tester. They are normal if resistance is 100Ω ± 10%.	Replace the LEV coils.	Outdoor unit (LEV2a, LEV2b, LEV2c, LEV2d) and BC controller (LEV3 (G1, GA1, HA1, KB type), LEV1 (G1 type))
	Measure resistance between the coils (red - white, red -orange, brown - yellow, brown - blue) using a tester. They are normal if resistance is 150Ω ± 3%.	Replace the LEV coils.	Indoor unit and BC controller (LEV1 (GA1, HA1, J, JA, KA type), LEV3 (J, JA, KA type))
	Measure the resistance between coils (red - white, red - orange, brown - yellow, brown - blue) with a tester. When the resistance is in the range of 46Ω ± 3%, the LEV is normal.	Replace the LEV coils.	Outdoor (LEV1, LEV4, LEV9)
Incomple sealing (leak from the valve)	When checking the refrigerant leak from the indoor LEV, run the target indoor unit in the fan mode, and the other indoor units in the cooling mode. Then, check the liquid temperature (TH22) with the self-diagnosis LED. When the unit is running in the fan mode, the LEV is fully closed, and the temperature detected by the thermistor is not low. If there is a leak, however, the temperature will be low. If the temperature is extremely low compared with the inlet temperature displayed on the remote controller, the LEV is not properly sealed, however, if there is a little leak, it is not necessary to replace the LEV when there are no effects to other parts. 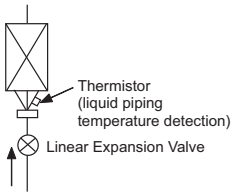 	If there is a large amount of leakage, replace the LEV.	Indoor unit
Faulty wire connections in the connector or faulty contact	1. Check for loose pins on the connector and check the colors of the lead wires visually 2. Disconnect the control board's connector and conduct a continuity check using a tester.	Check the continuity at the points where an error occurs.	Indoor unit, Outdoor unit and BC controller

8-8-3 Coil Removal Instructions

(1) Outdoor unit LEV (LEV4, LEV9)

1) Component

As shown in the figure, the outdoor LEV is made in such a way that the coils and the body can be separated.

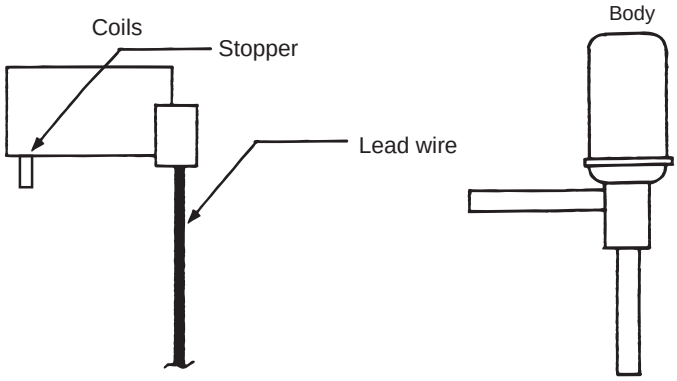

2) Removing the coils

Fasten the body tightly at the bottom (Part A in the figure) so that the body will not move, then pull out the coils toward the top. If the coils are pulled out without the body gripped, undue force will be applied and the pipe will be bent.

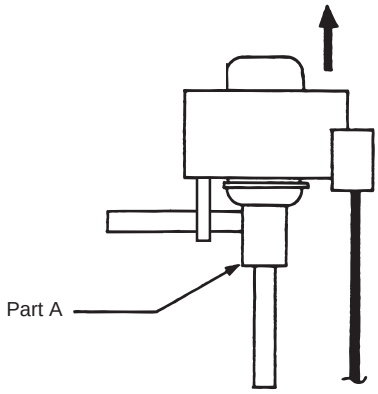

3) Installing the coils

Fix the body tightly at the bottom (Part A in the figure) so that the body will not move, then insert the coils from the top, and insert the coil stopper securely in the pipe on the body.
If the coils are pushed without the body gripped, undue force will be applied and the pipe will be bent. Hold the body when pulling out the coils to prevent so that the pipe will not be bent.

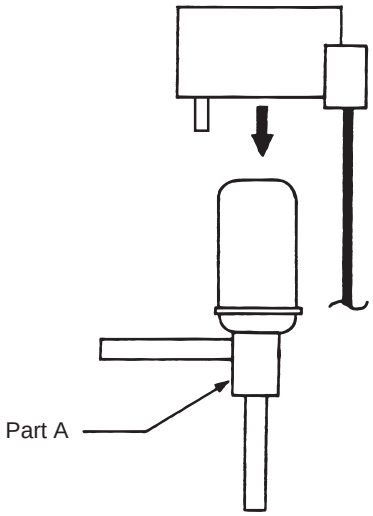

(2) Outdoor unit LEV (LEV2a, 2b, 2c, and 2d)

1) Components

The outdoor unit LEV consists of a coil and a valve body that can be separated from each other.

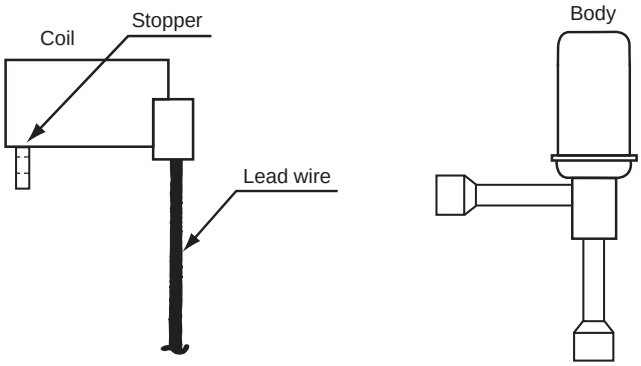

2) Removing the coil

Securely hold the LEV at the bottom (Part A in the figure), and turn the coil. After checking that the stopper is removed, pull up and out the coil.
When removing the coil, hold the LEV body securely to prevent undue force from being placed on the pipe and bending the pipe.

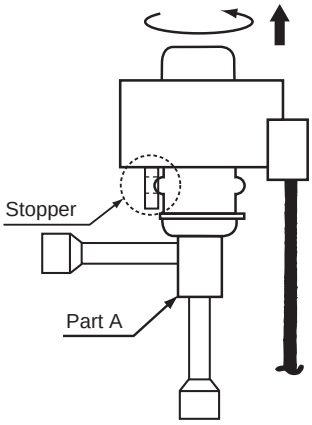

3) Installing the coil

Securely hold the bottom of the LEV (Part A in the figure), insert the coil from above, and turn the coil until the coil stopper is properly installed on the LEV body.
When removing the coil, hold the LEV body securely to prevent undue force from being placed on the pipe and bending the pipe.

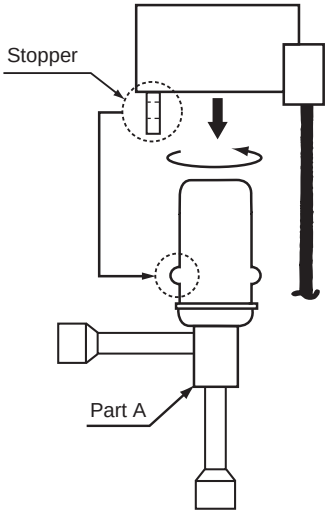

8-9 Troubleshooting Problems with Major Components on BC Controller

8-9-1 Pressure Sensor

Troubleshooting flow chart for pressure sensor

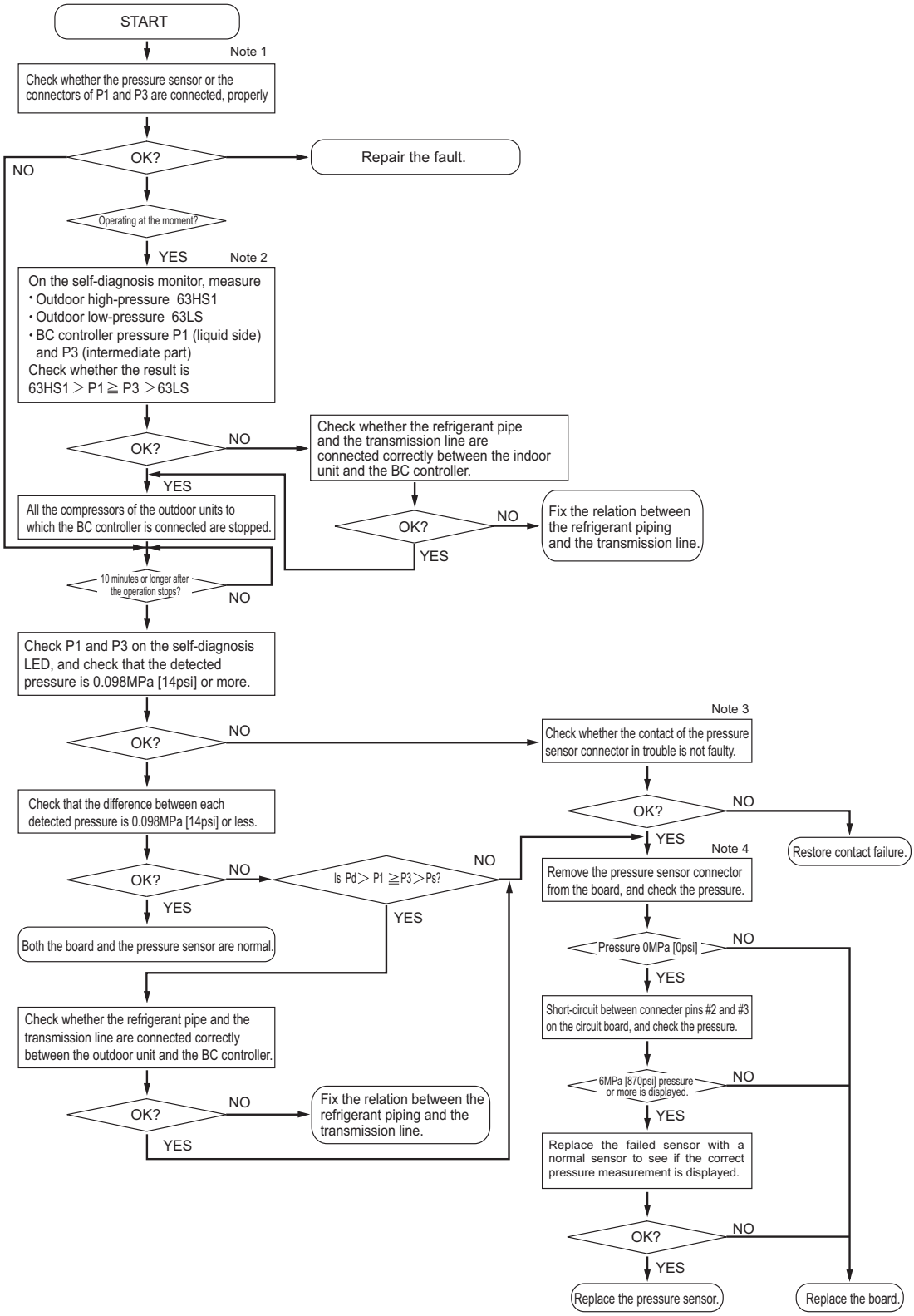

Note

1) BC controller: Phenomena when the pressure sensor is connected wrongly (reverse connection of P1 and P3) to the board.

Symptoms						
Cooling-only	Cooling-main		Heating only		Heating main	
Normal	Non-cooling	SC11 large SC16 small △PHM large	Indoor heating SC small Heating indoor Thermo ON Especially noise is large.	SC11 large SC16 small △PHM large	Non-cooling Indoor heating SC small Heating indoor Thermo ON Especially noise is large.	SC11 large SC16 small △PHM large

Note

2) Check the self-diagnosis switch (Outdoor control board SW4 and SW6).

Measurement data	Symbol	SW4 setting value	SW6 setting value
Outdoor high pressure	63HS1	ON □□□□□□□□□□ 1 2 3 4 5 6 7 8 9 10	ON □□□□□□□□□□ 1 2 3 4 5 6 7 8 9 10
Outdoor low pressure	63LS	ON □□□□□□□□□□ 1 2 3 4 5 6 7 8 9 10	ON □□□□□□□□□□ 1 2 3 4 5 6 7 8 9 10
BC controller pressure (liquid side)	PS1	ON □□□□□□□□□□ 1 2 3 4 5 6 7 8 9 10	ON □□□□□□□□□□ 1 2 3 4 5 6 7 8 9 10
BC controller pressure (intermediate part)	PS3	ON □□□□□□□□□□ 1 2 3 4 5 6 7 8 9 10	ON □□□□□□□□□□ 1 2 3 4 5 6 7 8 9 10
Sub BC controller pressure (intermediate part) (Sub 1)	PS3	ON □□□□□□□□□□ 1 2 3 4 5 6 7 8 9 10	ON □□□□□□□□□□ 1 2 3 4 5 6 7 8 9 10
Sub BC controller pressure (intermediate part) (Sub 2)	PS3	ON □□□□□□□□□□ 1 2 3 4 5 6 7 8 9 10	ON □□□□□□□□□□ 1 2 3 4 5 6 7 8 9 10
Sub BC controller pressure (intermediate part) (Sub 3)	PS3	ON □□□□□□□□□□ 1 2 3 4 5 6 7 8 9 10	ON □□□□□□□□□□ 1 2 3 4 5 6 7 8 9 10
Sub BC controller pressure (intermediate part) (Sub 4)	PS3	ON □□□□□□□□□□ 1 2 3 4 5 6 7 8 9 10	ON □□□□□□□□□□ 1 2 3 4 5 6 7 8 9 10

Measurement data	Symbol	SW4 setting value	SW6 setting value
Sub BC controller pressure (intermediate part) (Sub 5)	PS3	ON □□□□□□□□□□ 1 2 3 4 5 6 7 8 9 10	ON □□□□□□□□□□ 1 2 3 4 5 6 7 8 9 10
Sub BC controller pressure (intermediate part) (Sub 6)	PS3	ON □□□□□□□□□□ 1 2 3 4 5 6 7 8 9 10	ON □□□□□□□□□□ 1 2 3 4 5 6 7 8 9 10
Sub BC controller pressure (intermediate part) (Sub 7)	PS3	ON □□□□□□□□□□ 1 2 3 4 5 6 7 8 9 10	ON □□□□□□□□□□ 1 2 3 4 5 6 7 8 9 10
Sub BC controller pressure (intermediate part) (Sub 8)	PS3	ON □□□□□□□□□□ 1 2 3 4 5 6 7 8 9 10	ON □□□□□□□□□□ 1 2 3 4 5 6 7 8 9 10
Sub BC controller pressure (intermediate part) (Sub 9)	PS3	ON □□□□□□□□□□ 1 2 3 4 5 6 7 8 9 10	ON □□□□□□□□□□ 1 2 3 4 5 6 7 8 9 10
Sub BC controller pressure (intermediate part) (Sub 10)	PS3	ON □□□□□□□□□□ 1 2 3 4 5 6 7 8 9 10	ON □□□□□□□□□□ 1 2 3 4 5 6 7 8 9 10
Sub BC controller pressure (intermediate part) (Sub 11)	PS3	ON □□□□□□□□□□ 1 2 3 4 5 6 7 8 9 10	ON □□□□□□□□□□ 1 2 3 4 5 6 7 8 9 10

ON □□□□□□□□□□ 1 2 3 4 5 6 7 8 9 10

The figure at left shows that the switches 1 through 5 are set to ON and 6 through 10 are set to OFF.

Note

3) Check whether CNP1 (liquid side) connector on the BC controller control board and the connector CNP2 (intermediate part) are not disconnected or not loose.
4) Check the pressure value on the self-diagnosis switch (same as note 2) with the connector of the applied pressure sensor is disconnected from the board.

8-9-2 Temperature Sensor

Troubleshooting instructions for thermistor

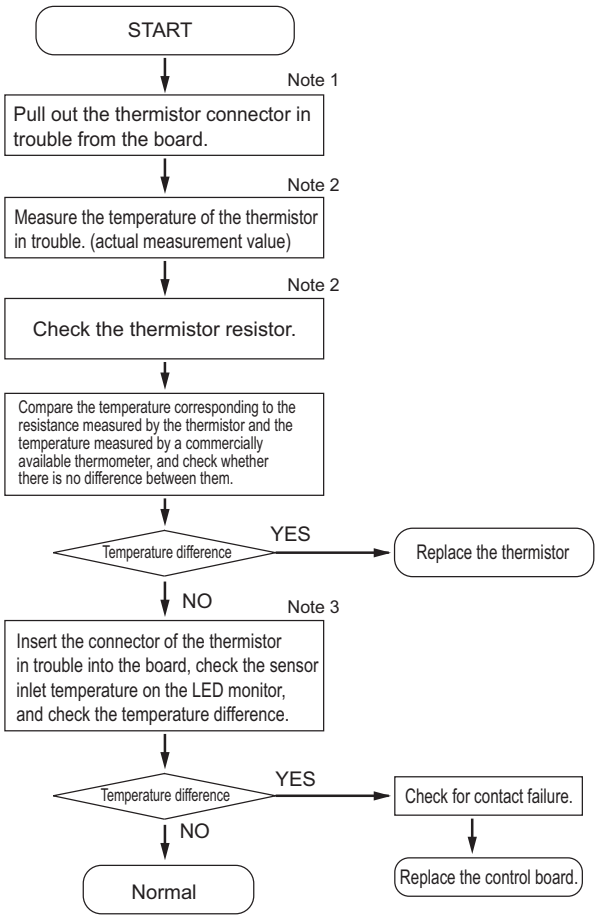

Note

1) For the connectors on the board, TH11 and TH12 are connected to CN10, and TH15 and TH16 are connected to CN11. Disconnect the connector in trouble, and check the sensor of each number.
2)
   - Pull out the sensor connector from the I/O board, Do not pull the sensor by holding the lead wire.
   - Measure the resistance with such as a tester.
   - Compare the measured value with that shown in the table below. When the result is ±10%, it is normal.
3) Check the self-diagnosis switch (Outdoor control board SW4 and SW6).

	Measurement data	Symbol	SW4 setting value	SW6 setting value
J, JA, KA (Standard / main)	Liquid inlet temperature	TH11	ON 1 2 3 4 5 6 7 8 9 10	ON 1 2 3 4 5 6 7 8 9 10
	Bypass outlet temperature	TH12	ON 1 2 3 4 5 6 7 8 9 10	ON 1 2 3 4 5 6 7 8 9 10
	Bypass inlet temperature	TH15	ON 1 2 3 4 5 6 7 8 9 10	ON 1 2 3 4 5 6 7 8 9 10
	Bypass inlet temperature	TH16	ON 1 2 3 4 5 6 7 8 9 10	ON 1 2 3 4 5 6 7 8 9 10
KB (Sub 1)	Bypass outlet temperature	TH12	ON 1 2 3 4 5 6 7 8 9 10	ON 1 2 3 4 5 6 7 8 9 10
	Bypass inlet temperature	TH15	ON 1 2 3 4 5 6 7 8 9 10	ON 1 2 3 4 5 6 7 8 9 10
	Bypass inlet temperature	TH16	ON 1 2 3 4 5 6 7 8 9 10	ON 1 2 3 4 5 6 7 8 9 10
KB (Sub 2)	Bypass outlet temperature	TH12	ON 1 2 3 4 5 6 7 8 9 10	ON 1 2 3 4 5 6 7 8 9 10
	Bypass inlet temperature	TH15	ON 1 2 3 4 5 6 7 8 9 10	ON 1 2 3 4 5 6 7 8 9 10
	Bypass inlet temperature	TH16	ON 1 2 3 4 5 6 7 8 9 10	ON 1 2 3 4 5 6 7 8 9 10
KB (Sub 3)	Bypass outlet temperature	TH12	ON 1 2 3 4 5 6 7 8 9 10	ON 1 2 3 4 5 6 7 8 9 10
	Bypass inlet temperature	TH15	ON 1 2 3 4 5 6 7 8 9 10	ON 1 2 3 4 5 6 7 8 9 10
	Bypass inlet temperature	TH16	ON 1 2 3 4 5 6 7 8 9 10	ON 1 2 3 4 5 6 7 8 9 10

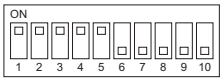

The figure at left shows that the switches 1 through 5 are set to ON and 6 through 10 are set to OFF.

	Measurement data	Symbol	SW4 setting value	SW6 setting value
KB (Sub 5)	Bypass outlet temperature	TH12	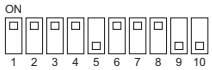	
	Bypass inlet temperature	TH15		
	Bypass inlet temperature	TH16		
KB (Sub 6)	Bypass outlet temperature	TH12		
	Bypass inlet temperature	TH15	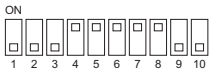	
	Bypass inlet temperature	TH16	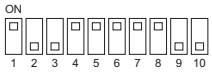	
KB (Sub 7)	Bypass outlet temperature	TH12	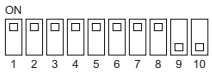	
	Bypass inlet temperature	TH15		
	Bypass inlet temperature	TH16		
KB (Sub 8)	Bypass outlet temperature	TH12		
	Bypass inlet temperature	TH15	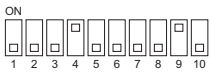	
	Bypass inlet temperature	TH16		
KB (Sub 9)	Bypass outlet temperature	TH12		
	Bypass inlet temperature	TH15		
	Bypass inlet temperature	TH16	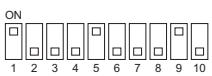	

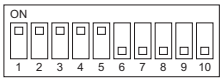

The figure at left shows that the switches 1 through 5 are set to ON and 6 through 10 are set to OFF.

	Measurement data	Symbol	SW4 setting value	SW6 setting value
KB (Sub 10)	Bypass outlet temperature	TH12		
	Bypass inlet temperature	TH15		
	Bypass inlet temperature	TH16		
KB (Sub 11)	Bypass outlet temperature	TH12		
	Bypass inlet temperature	TH15		
	Bypass inlet temperature	TH16		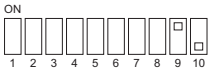

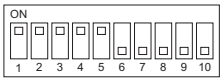

The figure at left shows that the switches 1 through 5 are set to ON and 6 through 10 are set to OFF.

8-9-3 Troubleshooting Flowchart for LEVs

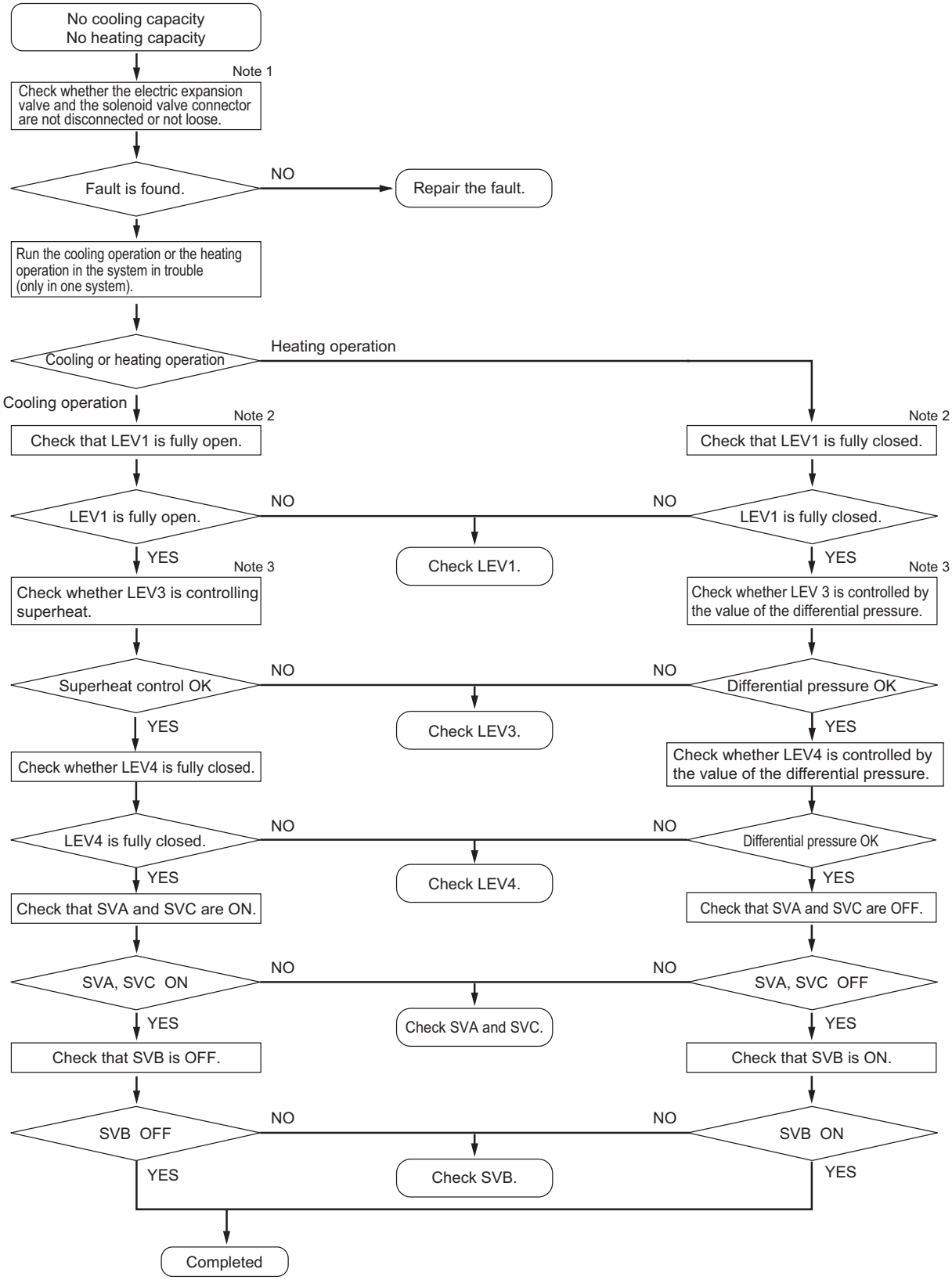

Note

1) BC controller: Phenomena when LEV is connected wrongly (reverse connection of LEV1 and LEV3 or LEV4) to the board.

Phenomena			
Cooling-only	Cooling-main	Heating only	Heating main
Non-cooling SH12 small, SC11 small SC16 small, branch pipe SC small BC controller sound	Non-cooling and non-heating SH12 small, SC11 small SC16 large, but branch pipe SC small BC controller sound△PHM large	Indoor heating SC small △PHM large	Non-cooling Indoor heating SC small △PHM large

2) BC controller: Phenomena when LEV is connected wrongly (reverse connection of LEV3 and LEV4) to the board

Phenomena			
Cooling-only	Cooling-main	Heating only	Heating main
Non-cooling SH12 large, SC11 small SC16 small, branch pipe SC small	Non-cooling SH12 large, SC11 small SC16 small, branch pipe SC small	SH12 large	Non-cooling SH12 large, SC16 small

3) Check method of fully open state or fully closed state of LEV

- Check LEV opening (pulse) on the self-diagnosis LED (Outdoor control board SW1).
  Full open: 3000 pulses
  Fully closed: 41 pulses (In the case of heating-only mode, however, the pulse may become 41 or more.)
- When LEV is fully open, measure the temperature at the upstream and downstream pipes of LEV, and make sure that there is no temperature difference.
- When LEV is fully closed, check that there is no refrigerant flowing sound.

4) Refer to the chart below to judge LEV opening controlled by the values of the differential pressure and of the superheat. (BC controller LEV basic operation characteristic)

	Part	Malfunction mode	Operation mode	Content	Standards of judgment on unit stable operation
J, JA, KA type	LEV1	Inclined to close	Heating only Heating-main Cooling-main	Difference between high pressure (P1) and intermediate pressure (P3) is large.	0.3 to 0.4MPa [44 to 58psi]
		Inclined to open		Difference between high pressure (P1) and intermediate pressure (P3) is small.	
	LEV3	Inclined to close	Cooling-only Cooling-main	SH12 is large.	SH12 < 20°C [36°F]
			Heating only Heating-main	Difference between high pressure (P1) and intermediate pressure (P3) is small.	0.3 to 0.4MPa [44 to 58psi]
		Inclined to open	Cooling-only Cooling-main	SC16 and SH12 are small.	SC16 > 3°C [5.4°F] SH12 > 3°C [5.4°F]
			Heating only Heating-main	Difference between high pressure (P1) and intermediate pressure (P3) is large.	0.3 to 0.4MPa [44 to 58psi]
	LEV4 (JA and KA types only)	Inclined to close	Heating-only Heating-main	Difference between high pressure (P1) and intermediate pressure (P3) is small.	0.3 to 0.4MPa [44 to 58 psi]
		Inclined to open	Cooling-only Cooling-main Heating-only Heating-main	SC16 is small.	SC16 > 3°C [5.4°F]
				Difference between high pressure (P1) and intermediate pressure (P3) is large.	0.3 to 0.4MPa [44 to 58 psi]
KB type	LEV3	Inclined to close	Cooling-only Cooling-main	SH12 is large.	SH12 < 20°C [36°F]
		Inclined to open	Cooling-only Cooling-main	SH12 is small.	SH12 > 3°C [5.4°F]

Self-diagnosis LED

	Measurement data	Symbol	SW4 setting value	SW6 setting value
J, JA, KA (Standard / main)	LEV1 opening	-	ON 1 2 3 4 5 6 7 8 9 10	ON 1 2 3 4 5 6 7 8 9 10
	LEV3 opening	-	ON 1 2 3 4 5 6 7 8 9 10	ON 1 2 3 4 5 6 7 8 9 10
	LEV4 opening (JA and KA only)	-	ON 1 2 3 4 5 6 7 8 9 10	ON 1 2 3 4 5 6 7 8 9 10
	BC controller bypass outlet superheat	SH12	ON 1 2 3 4 5 6 7 8 9 10	ON 1 2 3 4 5 6 7 8 9 10
	BC controller intermediate part subcool	SC16	ON 1 2 3 4 5 6 7 8 9 10	ON 1 2 3 4 5 6 7 8 9 10
	BC controller liquid-side subcool	SC11	ON 1 2 3 4 5 6 7 8 9 10	ON 1 2 3 4 5 6 7 8 9 10
KB (Sub 1)	LEV3 opening	-	ON 1 2 3 4 5 6 7 8 9 10	ON 1 2 3 4 5 6 7 8 9 10
KB (Sub 2)	LEV3 opening	-	ON 1 2 3 4 5 6 7 8 9 10	ON 1 2 3 4 5 6 7 8 9 10
KB (Sub 3)	LEV3 opening	-	ON 1 2 3 4 5 6 7 8 9 10	ON 1 2 3 4 5 6 7 8 9 10
KB (Sub 4)	LEV3 opening	-	ON 1 2 3 4 5 6 7 8 9 10	ON 1 2 3 4 5 6 7 8 9 10
KB (Sub 5)	LEV3 opening	-	ON 1 2 3 4 5 6 7 8 9 10	ON 1 2 3 4 5 6 7 8 9 10
KB (Sub 6)	LEV3 opening	-	ON 1 2 3 4 5 6 7 8 9 10	ON 1 2 3 4 5 6 7 8 9 10
KB (Sub 7)	LEV3 opening	-	ON 1 2 3 4 5 6 7 8 9 10	ON 1 2 3 4 5 6 7 8 9 10
KB (Sub 8)	LEV3 opening	-	ON 1 2 3 4 5 6 7 8 9 10	ON 1 2 3 4 5 6 7 8 9 10
KB (Sub 9)	LEV3 opening	-	ON 1 2 3 4 5 6 7 8 9 10	ON 1 2 3 4 5 6 7 8 9 10
KB (Sub 10)	LEV3 opening	-	ON 1 2 3 4 5 6 7 8 9 10	ON 1 2 3 4 5 6 7 8 9 10
KB (Sub 11)	LEV3 opening	-	ON 1 2 3 4 5 6 7 8 9 10	ON 1 2 3 4 5 6 7 8 9 10

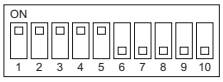

The figure at left shows that the switches 1 through 5 are set to ON and 6 through 10 are set to OFF.

Troubleshooting Flowchart for LEV

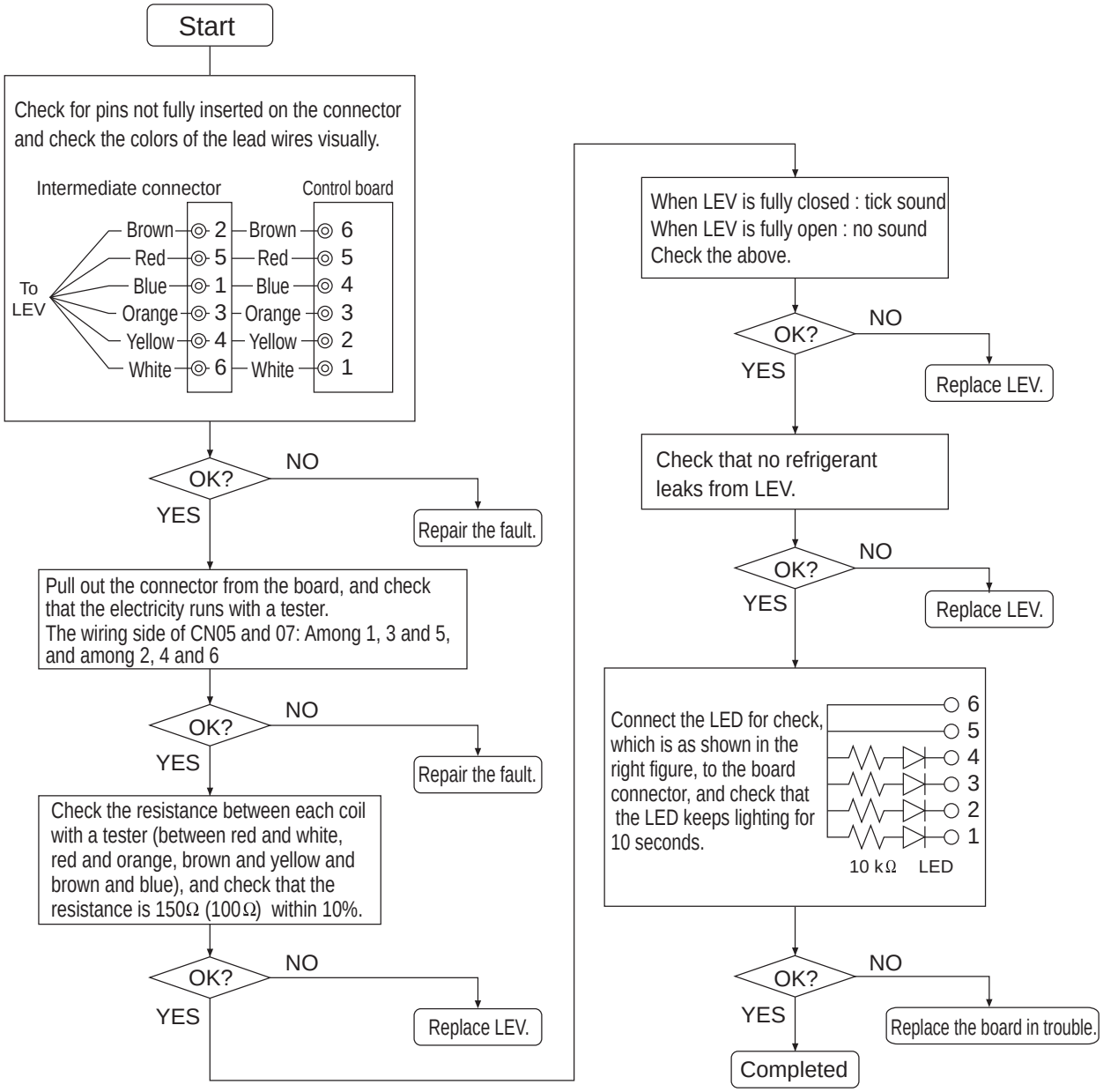

8-9-4 Troubleshooting Flowchart for Solenoid Valves

(1) Solenoid valve (SVA, SVB, SVC)

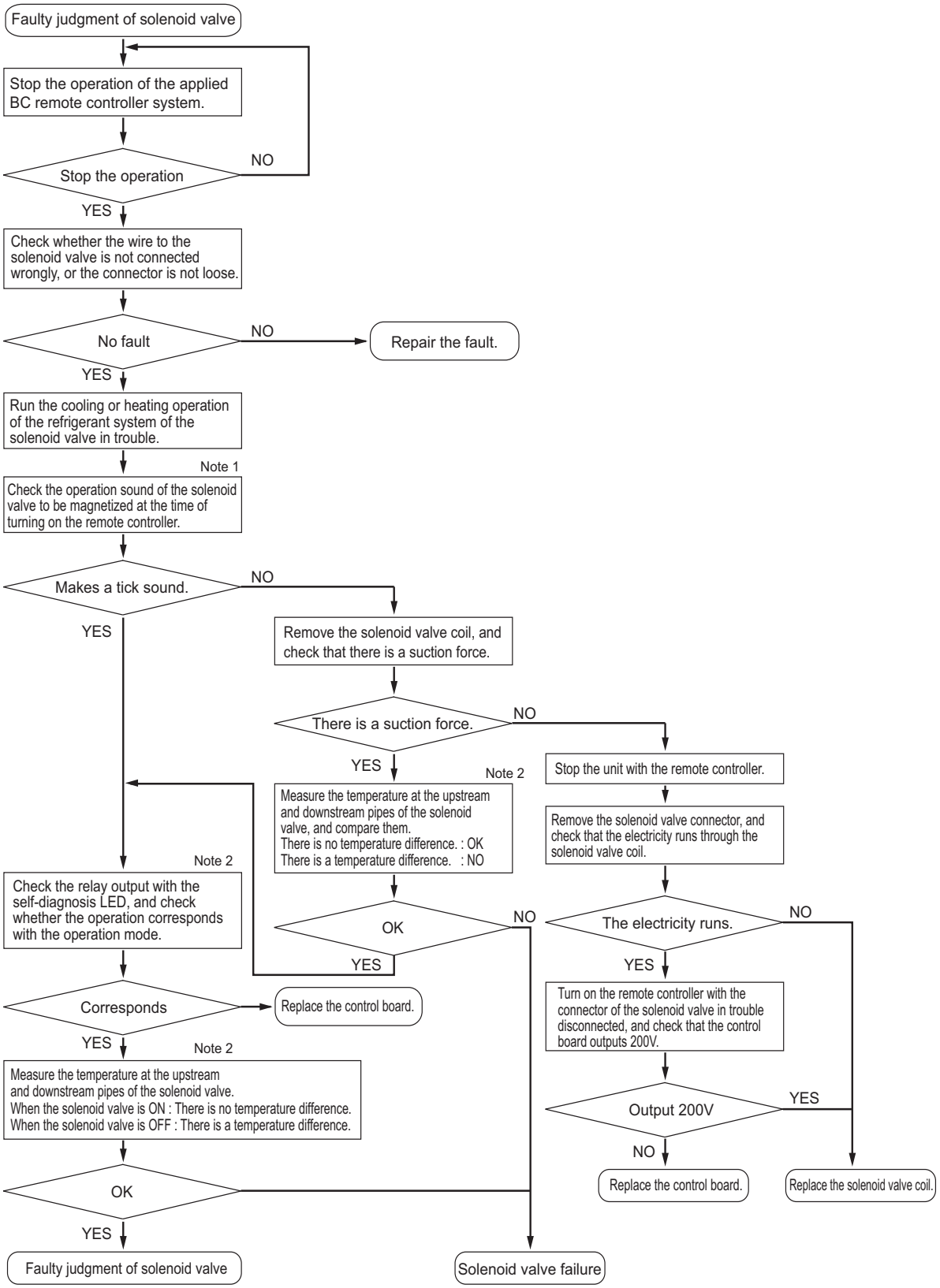

Check whether the BC board output signal corresponds with the solenoid valve operation correspond.

Note

1) SVA, SVB, SVC
SVA, SVB, and SVC turn on or off according to the indoor unit operation mode.

		Mode				
		Cooling	Heating	Stopped	Defrost	Fan
Port	SVA	ON	OFF	OFF	OFF	OFF
	SVB	OFF	ON	OFF	OFF	OFF
	SVC	ON	OFF	OFF	OFF	ON

SVM1, SVM1b
SVM1 and SVM1b turn on or off according to the indoor unit operation mode.

Operation mode	Cooling only	Cooling main	Heating only	Heating main	Defrost	Stopped
SVM1, SVM1b	ON	Pressure differential control OFF or ON	OFF	OFF	ON	OFF

Note

2) SVA, SVB, SVC
Measure the temperature at the upstream and downstream pipes ①and ②of SVA.
Measure the temperature at the upstream and downstream ①pipes and ③of SVB.

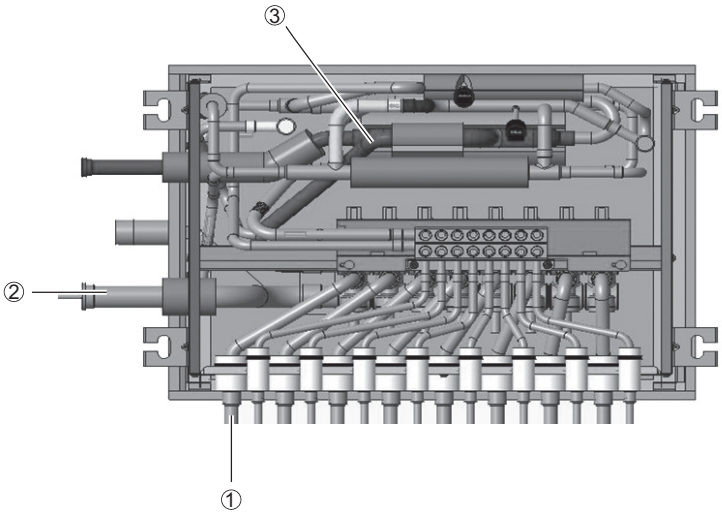

8-9-5 BC Controller Transformer

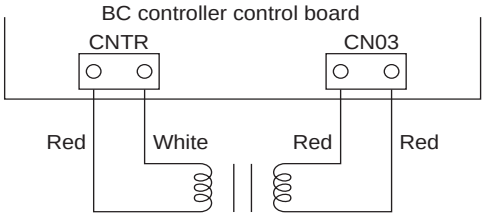

	Normal	Abnormal
CNTR(1)-(3)	about 58 Ω.	Open-phase or shorting
CN03(1)-(3)	about 1.6 Ω.	

* Before measuring the resistance, pull out the connector.

8-10 Troubleshooting Inverter Problems

8-10-1 Inverter-Related Problems and Solutions

- Replace only the compressor if only the compressor is found to be defective. (Overcurrent will flow through the inverter if the compressor is damaged, however, the power supply is automatically cut when overcurrent is detected, protecting the inverter from damage. Make sure that the model selection switches on the outdoor unit (Dip switches SW5-3 through 5-8 on the outdoor unit control board) are set correctly. For switch settings, refer to the following page(s). [7-9-2 Error Code [7101]])
- Replace only the fan motor if only the fan motor is found to be defective. (Overcurrent will flow through the inverter if the fan motor is damaged, however, the power supply is automatically cut when overcurrrent is detected, protecting the inverter from damage.)
- Replace the defective components if the inverter is found to be defective.
- If both the compressor and the inverter are found to be defective, replace the defective component(s) of both devices.

(1) Inverter-related problems: Troubleshooting and remedies

1) Inside the inverter is a large capacity electrolytic capacitor, and the residual voltage that remains after the main power is turned off presents a risk of electric shock. Before inspecting the inside of the control box, turn off the power, leave the unit turned off for at least 10 minutes, and check that the voltage across pins 1 (+) and 5 (-) of relay connector RYPN has dropped to 20 VDC or less. (It takes approximately 10 minutes to discharge electricity after the power is turned off.)
2) Perform the service after disconnecting the relay connectors of the outdoor unit fan (RYFAN1 and RYFAN2). Before plugging in or unplugging connectors, check that the outdoor unit fan is not rotating and that the voltage across Pin 1 (+) and Pin 5 (-) of connector RYPN is 20 VDC or less. The capacitor may collect a charge and cause an electric shock when the outdoor unit fan rotates in windy conditions. Refer to the wiring nameplate for details.
3) Reconnect the relay connectors (RYFAN 1 and RYFAN 2) after completion of maintenance work.
4) The IPM on the inverter becomes damaged if there are loose screws are connectors. If a problem occurs after replacing some of the parts, mixed up wiring is often the cause of the problem. Check for proper connection of the wiring, screws, connectors, and Faston terminals.
5) To avoid damage to the circuit board, do not connect or disconnect the inverter-related connectors with the main power turned on.
6) Faston terminals have a locking function. Make sure the terminals are securely locked in place after insertion.

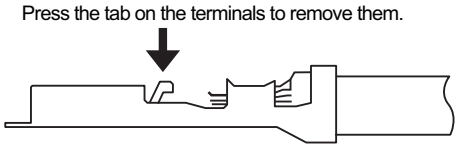

7) When the IPM or IGBT is replaced, apply a thin layer of heat radiation grease that is supplied evenly to these parts. Wipe off any grease that may get on the wiring terminal to avoid terminal contact failure.
8) Faulty wiring to the compressor damages the compressor. Connect the wiring in the correct phase sequence.
9) When the power is turned on, the compressor or heater is energized even while the compressor is not operating. Before turning on the power, disconnect all power supply wires from the compressor terminal block, and measure the insulation resistance of the compressor. Check the compressor for a ground fault. If the insulation resistance is 1.0 MΩ or below, connect all power supply wires to the compressor, and turn on the power to the outdoor unit. The liquid refrigerant in the compressor will evaporate by energizing the compressor or the heater.

	Error display/failure condition	Measure/inspection item
[1]	Inverter related errors 4250, 4255, 4256, 4220, 4225, 4226, 4230, 4240, 4260, 5301, 5305, 5306, 0403	Implement solutions that correspond to the error codes or preliminary error codes. Refer to the following page(s). [7-1 Error Code and Preliminary Error Code Lists]
[2]	Main power breaker trip Measure the secondary voltage of the main power breaker before checking because the main power breaker may have been broken.	Refer to the following page(s). [8-10-12 Solutions for the Main Breaker Trip]
[3]	Main power earth leakage breaker trip Measure the secondary voltage of the main power earth leakage breaker before checking because the main power earth leakage breaker may have been broken.	Refer to the following page(s). [8-10-13 Solutions for the Main Earth Leakage Breaker Trip]
[4]	Only the compressor does not operate.	Check the inverter frequency on the LED monitor. If the frequency indicates that the units are in operation, refer to the following page(s). [8-10-5 Checking the Inverter for Damage during Compressor Operation]
[5]	The compressor vibrates violently at all times or makes an abnormal sound.	Refer to the following page(s). [8-10-5 Checking the Inverter for Damage during Compressor Operation]
[6]	Compressor rotation speed does not reach the specified speed.	<1> Check for problems with compressor current and heatsink temperature.
		<2> Check for imbalance in power supply voltage. *Approximate target: 3% or less.
[7]	Only the fan motor does not operate.	Check the inverter frequency on the LED monitor. If the frequency indicates that the units are in operation, refer to the following page(s). [8-10-8 Checking the Fan Board Error Detection Circuit at No Load] [8-10-9 Checking the Fan Board for Damage at No Load] [8-10-10 Checking the Fan Board for Damage with Load]
[8]	The fan motor shakes violently at all times or makes an abnormal sound.	Check the inverter frequency on the LED monitor. If the frequency indicates that the units are in operation, refer to the following page(s). [8-10-8 Checking the Fan Board Error Detection Circuit at No Load] [8-10-9 Checking the Fan Board for Damage at No Load] [8-10-10 Checking the Fan Board for Damage with Load]
[9]	Noise is picked up by the peripheral device	<1> Check that power supply wiring of the peripheral device does not run close to the power supply wiring of the outdoor unit.
		<2> Check if the inverter output wiring is not running parallel to the power supply wiring and the transmission lines.
		<3> Check that the shielded wire is used as the transmission line when it is required, and check that the grounding work is performed properly on the shielded wire.
		<4> Meg failure for electrical system other than the inverter
		<5> Attach a ferrite core to the inverter output wiring. (Contact the factory for details of the service part settings.)
		<6> Provide separate power supply to the air conditioner and other electric appliances.
		<7> If the problem suddenly appeared, inverter output may have had a ground fault. For details, refer to the following page(s). [8-10-5 Checking the Inverter for Damage during Compressor Operation]
		*Contact the factory for cases other than those listed above.
[10]	Sudden malfunction (as a result of external noise.)	<1> Check that the grounding work is performed properly.
		<2>Check that the shielded wire is used as the transmission line when it is required, and check that the grounding work is performed properly on the shielded wire.
		<3>Check that neither the transmission line nor the external connection wiring does not run close to another power supply system or does not run through the same conduit pipe.
		* Contact the factory for cases other than those listed above.

8-10-2 Checking the Inverter Board Error Detection Circuit

Items to be checked	Phenomena	Remedy
(1) Stop the unit. Remove power supply.	1) Overcurrent error Error code: 4250 Detail code: No. 101, 104, 105, 106, and 107	Replace the INV board.
(2) Disconnect the inverter output wires from the compressor terminals (U, V, W).*1	2) Logic error Error code: 4220 Detail code: No. 111	Replace the INV board.
(3) Apply power supply.	3) ACCT sensor circuit failure Error code: 5301 Detail code: No.117	Replace the INV board.
(4) Put the outdoor unit into operation.	4) IPM open Error code: 5301 Detail code: No.119	Normal

*1 Output voltage is present at the inverter output wiring terminal. To avoid short-circuiting and ground fault, do not let the terminal come in contact with the unit or the compressor, and use caution not to damage the terminal.

*2 Compressors on (E)P72 models are located in the back of the MAIN BOX. To disconnect the inverter output wiring, move the MAIN BOX out of the way first, and then disconnect the wiring from the terminal on the compressor. Refer to [8-13-1 Ensuring Maintenance Space (Preparation for the Maintenance of Refrigerant Circuit Parts) <Type A/Type A1>]for how to move the MAIN BOX.

8-10-3 Checking the Compressor for Ground Fault and Coil Resistance Problems

Items to be checked	Phenomena	Remedy
Disconnect the compressor wiring, and check the compressor Meg, and coil resistance.	1) Compressor Meg failure Error if less than 1 MΩ.	Check that there is no liquid refrigerant in the compressor. If there is none, replace the compressor.
	2) Compressor coil resistance failure Coil resistance value P72, P96 models 0.72 Ω (YNU), 0.2 Ω (TNU) EP72, EP96, P120, P144 models 0.192 Ω (YNU), 0.078 Ω (TNU) EP120, EP144, EP168, P168 models 0.219 Ω (YNU), 0.087 Ω (TNU) EP192, EP216, EP240 models 0.212 Ω (YNU), 0.079 Ω (TNU)	Replace the compressor.

8-10-4 Checking the Inverter for Damage at No-Load

Items to be checked	Phenomena	Remedy
(1) Stop the unit. Remove power supply.	1) Inverter-related problems are detected.	Set SW7-1 on the MAIN board to ON, and go to [8-10-2 Checking the Inverter Board Error Detection Circuit]. ∗When the MAIN board software version is 26.23 or earlier, this function will not be enabled. In such a case, update the software to the latest version.
(2) Disconnect the inverter output wires from the compressor terminals (U, V, W).*1	2) Inverter voltage is not output at the terminals (U, V, and W)	Replace the INV board.
(3) Set SW7-1 on the MAIN board to ON. (4) Apply power supply.	3) There is an voltage imbalance between the wires. Greater than 5% imbalance or 5V	Replace the INV board.
(5) Put the outdoor unit into operation. Check the inverter output voltage after the inverter output frequency has stabilized.	4) There is no voltage imbalance between the wires.	Normal *When done checking, set SW7-1 on the MAIN board back to as it was.

*1 Output voltage is present at the inverter output wiring terminal. To avoid short-circuiting and ground fault, do not let the terminal come in contact with the unit or the compressor, and use caution not to damage the terminal.

*2 Compressors on (E)P72 models are located in the back of the MAIN BOX. To disconnect the inverter output wiring, move the MAIN BOX out of the way first, and then disconnect the wiring from the terminal on the compressor. Refer to [8-13-1 Ensuring Maintenance Space (Preparation for the Maintenance of Refrigerant Circuit Parts) <Type A/Type A1>]for how to move the MAIN BOX.

8-10-5 Checking the Inverter for Damage during Compressor Operation

Items to be checked	Phenomena	Remedy
Put the outdoor unit into operation. Check the inverter output voltage (at the compressor terminal) after the inverter output frequency has stabilized. <INV35Y, 42Y, 38>	1) Overcurrent-related problems occur immediately after compressor startup. Error code : 4250 Detail code : 101, 102, 106, 107	a. Check items [8-10-2 Checking the Inverter Board Error Detection Circuit]through [8-10-4 Checking the Inverter for Damage at No-Load]for problems. b. Check that high and low pressures are balanced. c. Check that no liquid refrigerant is present in the compressor and that there is no liquid backflow. →Go to "d." when the problem persists after compressor startup was repeated several times. d. Check that there is a pressure difference between high and low pressures after compressor start-up. →Check the high pressure with LED monitor for changes. Replace the compressor if there is no pressure difference. (the compressor may be locked.)
	2) There is a voltage imbalance between the wires after the inverter output voltage is stabilized. Greater than the larger of the following values: imbalance of 5% or 5V	Replace the INV board if there is a voltage imbalance.

Items to be checked	Phenomena	Remedy
<INV37YC, 39C>	3) An overcurrent error occurs during operation. Error code : 4250 Detail code : 121,122	[8-10-6 Checking the Converter for Damage during Compressor Operation]
	4) An overcurrent error occurs immediately after compressor startup. Error code : 4250 Detail code :101,106,107,128	a. Check for refrigerant flooding. →When the problem persists after compressor startup was repeated several times, go to "d" after a certain time after energizing the compressor or the heater. b. Check that there is a pressure difference between high and low pressures after compressor startup. →Check the high pressure with LED monitor for changes. Replace the compressor if there is no pressure difference. (the compressor may be locked.) c. Check for interphase voltage imbalance. d. Replace the INV board if no problems were found with the items a or c. e. If the problem persists after replacing the inverter board, [8-10-3 Checking the Compressor for Ground Fault and Coil Resistance Problems]
	5) An overvoltage error occurs during operation. Error code : 4220 Detail code :109,110,112	[8-10-6 Checking the Converter for Damage during Compressor Operation]
	6) No problems were found with items 1) through 5).	Normal [8-10-6 Checking the Converter for Damage during Compressor Operation]

8-10-6 Checking the Converter for Damage during Compressor Operation

Items to be checked	Phenomena	Remedy
(1) Operate the outdoor unit.	1) BUS voltage does not boost (does not change) BUS voltage does not boost to approximately between 650 and 750 VDC, or the following errors are detected. Error code : 4220 Detail code : 123	Replace the inverter board.
(2) Check the BUS voltage after the converter circuit went into operation and the BUS voltage has boost. *The voltage generally boost at or above 80 rps, depending on the power source voltage.	2) An overcurrent error occurs after converter circuit goes into operation. Error code : 4250 Detail code : 121,122	a.If the problem persists after startup, replace the inverter board. b.If the problem persists after replacing the inverter board, replace the DCL.
	3) An overvoltage error occurs after converter circuit goes into operation. Error code : 4220 Detail code : 109,110,112	a.If the problem persists after startup, replace the inverter board. b.If the problem persists after replacing the inverter board, replace the DCL.
	4) No problems were found with items 1) through 3).	Normal

8-10-7 Checking the Fan Motor for Ground Fault and Coil Resistance Problems

Items to be checked	Phenomena	Remedy
Remove fan motor winding. Check insulation resistance and coil resistance.	1) Fan motor insulation failure. If < 1 MΩ, Defect.	Change fan motor.
	2) Fan motor wire failure. Target coil resistance: Approx. 10 Ω. (Changes with temperature)	Change fan motor.

8-10-8 Checking the Fan Board Error Detection Circuit at No Load

Items to be checked	Phenomena	Remedy
(1) Stop the unit. Turn off the breaker. *Be sure to turn off the power.	1) An error other than current sensor error (5305, 5306: Detail code 135) is detected during operation.	Replace the fan board.
(2) Disconnect the output wiring to the fan motor. Disconnect connector RYFAN1. (On a model with two fan motors, RYFAN1 corresponds to the right fan and RYFAN2 corresponds to the left fan (when seen from the front).) (3) Turn on the breaker. (4) Operate the unit.	2) Current sensor fault Error code: 5305, 5306 Detail code: 135	Normal *When done checking, reconnect all connectors as they were. Unless they are properly reconnected, current sensor fault will not be resolved.

8-10-9 Checking the Fan Board for Damage at No Load

Items to be checked	Phenomena	Remedy
(1) Stop the unit. Turn off the breaker. *Be sure to turn off the power.	1) An error other than the current sensor error (5305, 5306 Detail code 135) is detected within 30 seconds from the startup of operation.	Replace the fan board.
(2) To allow for the disconnection of output wiring from the fan motor, disconnect connector RYFAN1. (On a model with two fan motors, RYFAN1 corresponds to the right fan and RYFAN2 corresponds to the left fan (when seen from the front).)	2) Inter-wire voltage imbalance of 5 V or above	Replace the fan board.
(3) Set SW7-2 on the control board to ON. On a model with two fan motors, set SW7-2 (left fan when seen from the front) or SW7-4 (right fan when seen from the front) to ON. (4) Turn on the breaker. (5) Operate the unit	3) No inter-wire voltage imbalance exists. A current sensor error (Detail code 135) is detected 30 seconds after the startup of operation, and the operation stops.	Normal *When done checking, reconnect all connectors as they were. Unless they are properly reconnected, current sensor fault will not be resolved.

8-10-10 Checking the Fan Board for Damage with Load

Items to be checked	Phenomena	Remedy
(1) Turn off breaker.	1) The operation stops within 20 seconds of startup and a step-out error or an overcurrent error occurs. Check code: 4255, 4256 Detail code: 101, 106, 107, 137	Check for fan motor lock. →If locked, change for fan motor. If the same error is still present after changing fan motor, change Fan board. →If not locked, refer to 3) & 4).
(2) Turn on breaker.	2) Motor synchronization loss or electrical current overload during operation Check code: 4255, 4256 Detail code: 101, 106, 107, 137	a. Check for gusts or windy conditions. b. Go to [8-10-8 Checking the Fan Board Error Detection Circuit at No Load]if not windy. c. After checking [8-10-9 Checking the Fan Board for Damage at No Load], and there is no problem, change Fan board. d. If replacing Fan board doesn't resolve issue, change fan motor.
(3) Operate unit.	3) Sensor error during operation Check code: 5305, 5306 Detail code: 135, 136	a. Check for disconnection of fan inverter output wiring and for broken wiring. b. If the error is not associated with any of the items above, replace the fan board. c. Change fan motor if Fan board change doesn't resolve issue.
	4) Voltage overload error Check code: 4225, 4226 Detail code: 109	a. Check for gusts or windy conditions. b. Change Fan board if it is not windy.
	5) Load short circuit Check code: 4255, 4256. Detail code: 105	a. Check [8-10-7 Checking the Fan Motor for Ground Fault and Coil Resistance Problems] and [8-10-8 Checking the Fan Board Error Detection Circuit at No Load]. If no problem, then check wiring forshort circuit. b. If there is no problem with item a. above, change fan motor. c. If same error after motor change, change Fan board.
	6) After RPM has stabilized, voltage unbalance of 5%, or 5V.	a. If voltage is unbalanced, go to [8-10-8 Checking the Fan Board Error Detection Circuit at No Load] b. After checking [8-10-9 Checking the Fan Board for Damage at No Load], and there is no problem, change Fan board. c. If replacing Fan board doesn't resolve issue, change fan motor.

8-10-11 Checking the Installation Conditions

Items to be checked	Phenomena	Remedy
(1) Check refrigerant charge.	Overcharge of refrigerant	Return to correct refrigerant charge.
(2) Check outdoor unit branch installation.	The branch approach <500 mm.	Make branch approach >500mm
	Is the branch angle < ±15° to horizontal?	Make branch angle < ±15°

8-10-12 Solutions for the Main Breaker Trip

Note

Measure the secondary voltage of the main power breaker before checking because the main power breaker may have been broken.

	Items to be checked	Phenomena	Remedy
[1]	Check the breaker capacity.	Use of a non-specified breaker	Replace it with a specified breaker.
[2]	Perform Meg check between the terminals on the power terminal block TB1.	Zero to several ohm, or Meg failure	Check each part and wiring. Refer to the following page(s). [8-10-14 Simple Check on Inverter Circuit Components] ♦IGBT module ♦Rush current protection resistor ♦Electromagnetic relay ♦DC reactor
[3]	Turn on the power again and check again.	1) Main power breaker trip	
		2) No remote control display	
[4]	Turn on the outdoor unit and check that it operates normally.	1) Operates normally without tripping the main breaker.	a) The wiring may have been short-circuited. Search for the wire that short-circuited, and repair it. b) If item a) above is not the cause of the problem, refer to [8-10-2 Checking the Inverter Board Error Detection Circuit] - [8-10-10 Checking the Fan Board for Damage with Load]
		2) Main power breaker trip	

8-10-13 Solutions for the Main Earth Leakage Breaker Trip

Note

Measure the secondary voltage of the main power earth leakage breaker before checking because the main power earth leakage breaker may have been broken.

	Items to be checked	Phenomena	Remedy
[1]	Check the earth leakage breaker capacity and the sensitivity current.	Use of a non-specified earth leakage breaker	Replace with a regulation earth leakage breaker.
[2]	Check the resistance at the power supply terminal block TB1 with a megger.	Failure resistance value	Check each part and wiring. Refer to the following page(s). [8-10-14 Simple Check on Inverter Circuit Components] ♦IGBT module ♦Rush current protection resistor ♦Electromagnetic relay ♦DC reactor
[3]	Disconnect the compressor wirings and check the resistance of the compressor with a megger.	Failure compressor if the insulating resistance value is not in specified range. Failure when the insulating resistance value is 1 MΩ or less.	Check that there is no liquid refrigerant in the compressor. If there is none, replace the compressor.
[4]	Disconnect the fan motor wirings and check the resistance of the fan motor with a megger.	Failure fan motor if the insulating resistance value is not in specified range. Failure when the insulating resistance value is 1 MΩ or less.	Replace the fan motor.

Earth leakage current measurement method

- ♦For easy on-site measurement of the earth leakage current, enable the filter with a measurement instrument that has filter functions as below, clamp all the power supply wires, and measure.
  Recommended measurement instrument: CLAMP ON LEAK HiTESTER 3283 made by HIOKI E.E. CORPORATION
- ♦When measuring one device alone, measure near the device's power supply terminal block.

8-10-14 Simple Check on Inverter Circuit Components

Note

Turn off the power to the unit, and leave it turned off for at least 10 minutes. Check that the voltage across pins 1 (+) and 5 (-) of the connector RYPN1 is 20 VDC or less before removing components from the control box.

<table>
<tr><th>Part name</th><th>Judgment method</th></tr>
<tr><td>IGBT module</td><td>Refer to the following page(s). [8-10-15 Troubleshooting Problems with IGBT Module]</td></tr>
<tr><td>Rush current protection resistor
R1, R5</td><td>Measure the resistance between terminals R1 and R5: 22 Ω±10%</td></tr>
<tr><td>Electromagnetic relay
72C</td><td>This electromagnetic relay is rated at DC12V and is driven by a coil.
Check the resistance between terminals
 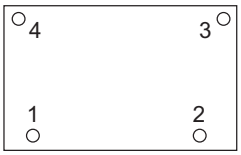

<table>
<tr><th></th><th colspan="4">Check point</th><th rowspan="2">Checking criteria</th></tr>
<tr><th></th><th>INV35Y, INV42Y</th><th>INV37YC</th><th>INV38</th><th>INV39C</th></tr>
<tr><td>Coil</td><td>INV board
X901, X902
Across pins 1-2</td><td>INV board
X101, X102, X103
Across pins 1-2</td><td>INV board
X901, X902, X903
Across pins 1-2</td><td>INV board
X100, X101, X102, X103
Across pins 1-2</td><td>160Ω ± 10%</td></tr>
<tr><td>Contact</td><td>INV board
FT-P1 and FT-P2
*Faston terminal removed</td><td>INV board
FT100 and FT101
*Faston terminal removed</td><td>INV board
FT-P1 and FT-P2
*Faston terminal removed</td><td>INV board
FT100 and FT101
*Faston terminal removed</td><td>INV board CNRY
Open: ∞
INV board CNRY
At a voltage input of
12 VDC: 0Ω</td></tr>
</table></td></tr>
<tr><td>DC reactor
DCL</td><td>Measure the resistance between terminals: 1Ω or lower (almost 0 Ω)
Measure the resistance between terminals and the chassis: ∞</td></tr>
<tr><td>Current sensor
ACCT</td><td>Disconnect the wiring connector from CNCT2, and measure the inter-teminal resistance: 280Ω±30Ω
Between pins 1 and 2 (U-phase), pins 3 and 4 (W-phase)
 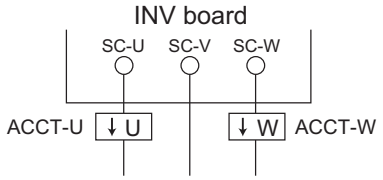

*Check ACCT wiring for correct phase and direction.</td></tr>
</table>

8-10-15 Troubleshooting Problems with IGBT Module

Measure the resistances between each pair of terminals on the IGBT with a tester, and use the results for troubleshooting. The terminals on the INV board are used for the measurement.

1) Notes on measurement

- Check the polarity before measuring. (On the tester, black normally indicates plus.)
- Check that the resistance is not open (∞ Ω) or not shorted (to 0 Ω).
- The values are for reference, and the margin of errors is allowed.
- The result that is more than double or half of the result that is measured at the same measurement point is not allowed.
- Disconnect all the wiring connected the INV board, and make the measurement.

2) Tester restriction

- Use the tester whose internal electrical power source is 1.5V or greater
- Use the dry-battery-powered tester.

Note

(The accurate diode-specific resistance cannot be measured with the button-battery-powered card tester, as the applied voltage is low.)

- Use a low-range tester if possible. A more accurate resistance can be measured.

<INV35Y>

Reference resistance value

		Black (+)				
		SC-PL	CN-N	SC-L1	SC-L2	SC-L3
Red (-)	SC-PL	-	-	5-200 Ω	5-200 Ω	5-200 Ω
	CN-N	-	-	∞	∞	∞
	SC-L1	∞	5-200 Ω	-	-	-
	SC-L2	∞	5-200 Ω	-	-	-
	SC-L3	∞	5-200 Ω	-	-	-

		Black (+)				
		SC-P1L	CN-N	SC-U	SC-V	SC-W
Red (-)	SC-P1L	-	-	5-200 Ω	5-200 Ω	5-200 Ω
	CN-N	-	-	∞	∞	∞
	SC-U	∞	5-200 Ω	-	-	-
	SC-V	∞	5-200 Ω	-	-	-
	SC-W	∞	5-200 Ω	-	-	-

INV board outline drawing

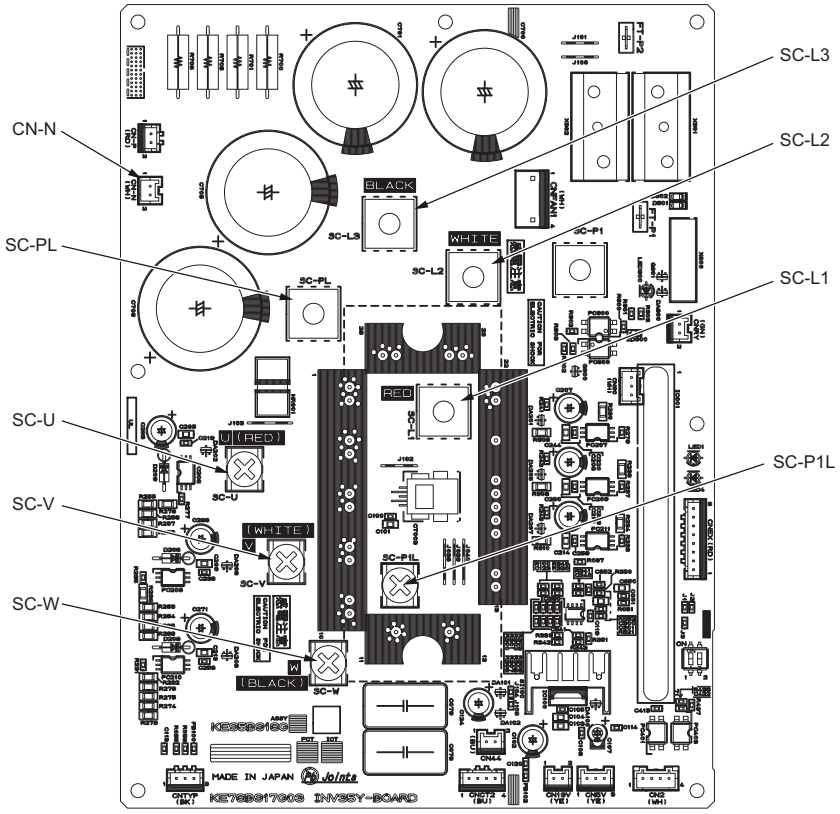

<INV42Y>

Reference resistance value

		Black (+)				
		SC-P	CN-N	SC-L1	SC-L2	SC-L3L
Red (-)	SC-P	-	-	5-200 Ω	5-200 Ω	5-200 Ω
	CN-N	-	-	∞	∞	∞
	SC-L1	∞	5-200 Ω	-	-	-
	SC-L2	∞	5-200 Ω	-	-	-
	SC-L3	∞	5-200 Ω	-	-	-

		Black (+)				
		SC-P1	CN-N	SC-U	SC-V	SC-W
Red (-)	SC-P1	-	-	5-200 Ω	5-200 Ω	5-200 Ω
	CN-N	-	-	∞	∞	∞
	SC-U	∞	5-200 Ω	-	-	-
	SC-V	∞	5-200 Ω	-	-	-
	SC-W	∞	5-200 Ω	-	-	-

INV board outline drawing

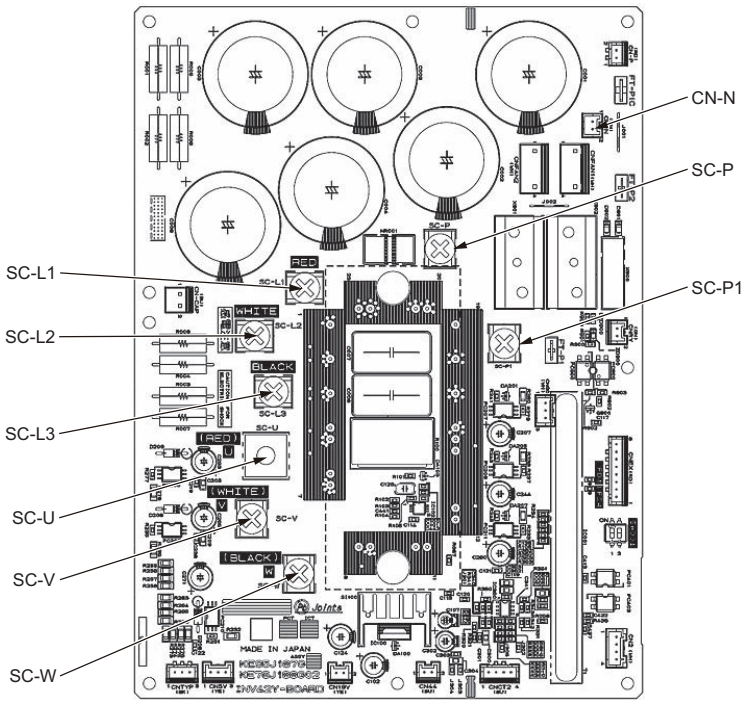

<INV37YC>

Reference resistance value

		Black (+)						
		SC-L1	SC-L2	SC-L3	SC-B	SC-L	FT100	CN-N
Red (-)	SC-L1	-	-	-	-	∞	-	5-200 Ω
	SC-L2	-	-	-	-	∞	-	5-200 Ω
	SC-L3	-	-	-	-	∞	-	5-200 Ω
	SC-B	-	-	-	-	-	∞	-
	SC-L	5-200 Ω	5-200 Ω	5-200 Ω	-	-	-	-
	FT100	-	-	-	5-200 Ω	-	-	-
	CN-N	∞	∞	∞	-	-	-	-

		Black (+)				
		FT100	CN-N	SC-U	SC-V	SC-W
Red (-)	FT100	-	-	5-200 Ω	5-200 Ω	5-200 Ω
	CN-N	-	-	∞	∞	∞
	SC-U	∞	5-200 Ω	-	-	-
	SC-V	∞	5-200 Ω	-	-	-
	SC-W	∞	5-200 Ω	-	-	-

INV board outline drawing

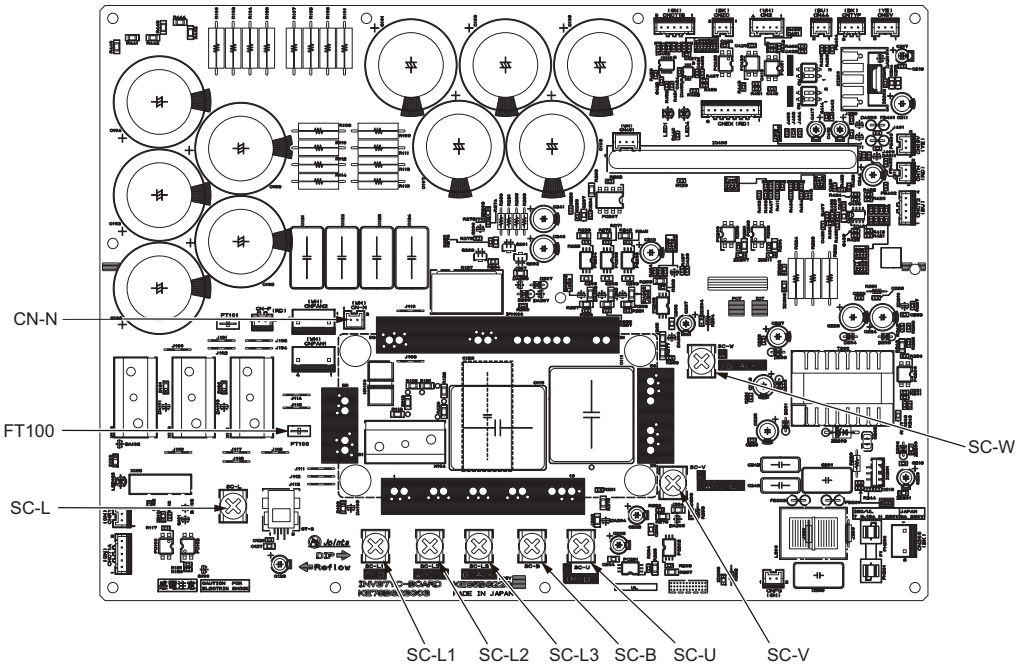

<INV38>

Reference resistance value

		Black (+)				
		SC-L1	SC-L2	SC-L3L	SC-PL	SC-N1
Red (-)	SC-L1	-	-	-	∞	5-200 Ω
	SC-L2	-	-	-	∞	5-200 Ω
	SC-L3	-	-	-	∞	5-200 Ω
	SC-PL	5-200 Ω	5-200 Ω	5-200 Ω	-	-
	SC-N1	∞	∞	∞	-	-

		Black (+)				
		SC-P1L	SC-N2	SC-D1	SC-D2	SC-D3
Red (-)	SC-P1L	-	-	5-200 Ω	5-200 Ω	5-200 Ω
	SC-N2	-	-	∞	∞	∞
	SC-D1	∞	5-200 Ω	-	-	-
	SC-D2	∞	5-200 Ω	-	-	-
	SC-D3	∞	5-200 Ω	-	-	-

INV board outline drawing

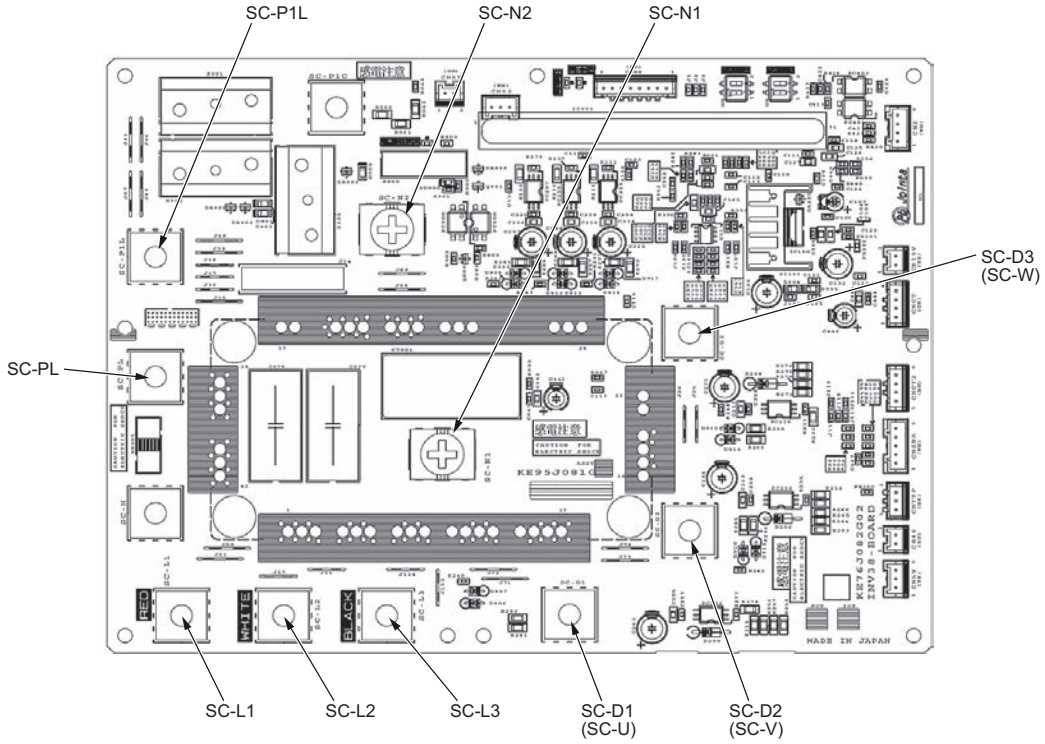

<INV39C>

Reference resistance value

		Black (+)						
		R	S	T	SC-B	SC-L	FT100	CN-N
Red (-)	R	-	-	-	-	∞	-	5-200 Ω
	S	-	-	-	-	∞	-	5-200 Ω
	T	-	-	-	-	∞	-	5-200 Ω
	SC-B	-	-	-	-	-	∞	-
	SC-L	5-200 Ω	5-200 Ω	5-200 Ω	-	-	-	-
	FT100	-	-	-	5-200 Ω	-	-	-
	CN-N	∞	∞	∞	-	-	-	-

		Black (+)				
		FT100	CN-N2	SC-U	SC-V	SC-W
Red (-)	FT100	-	-	5-200 Ω	5-200 Ω	5-200 Ω
	CN-N2	-	-	∞	∞	∞
	SC-U	∞	5-200 Ω	-	-	-
	SC-V	∞	5-200 Ω	-	-	-
	SC-W	∞	5-200 Ω	-	-	-

INV board outline drawing

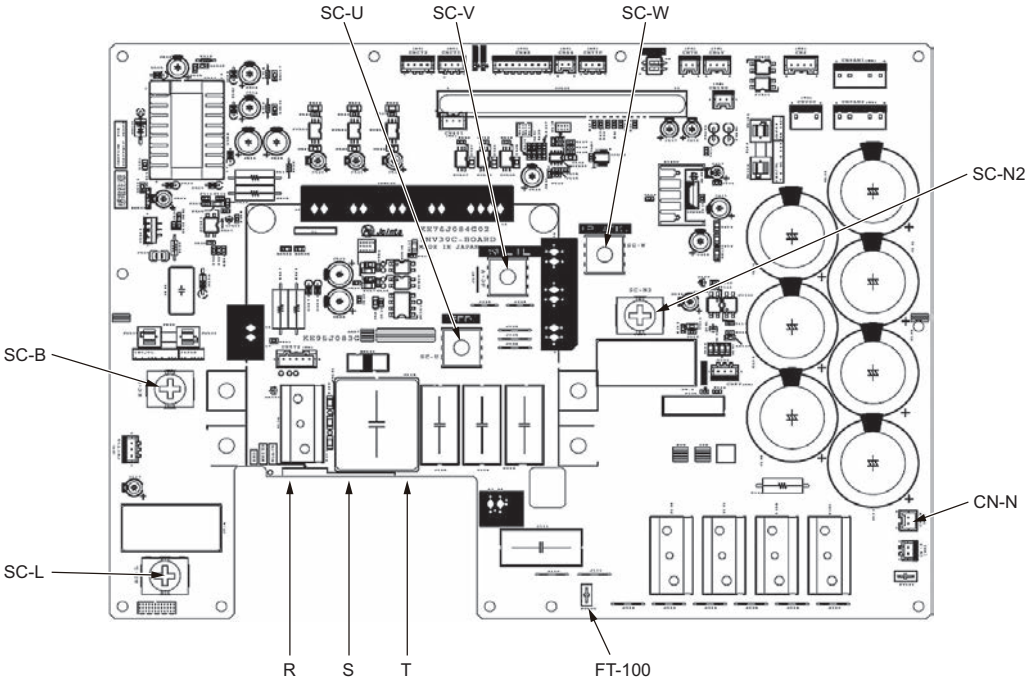

8-10-16 Checking the Fan Inverter Heatsink for Clogging

Check the fan inverter heatsink for clogging by removing part of the duct and checking inside the duct.

To remove the duct, follow the procedures 1) through 3) below.
Reassemble the components in the reverse order as they were removed.

1) Remove the front service panel.

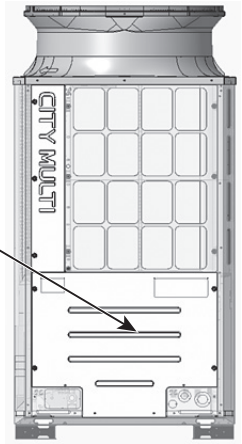

2) Remove the main control box (applicable to the (E)P72 models only).
On the (E)P96-168 models, it is not necessary to remove the control box.

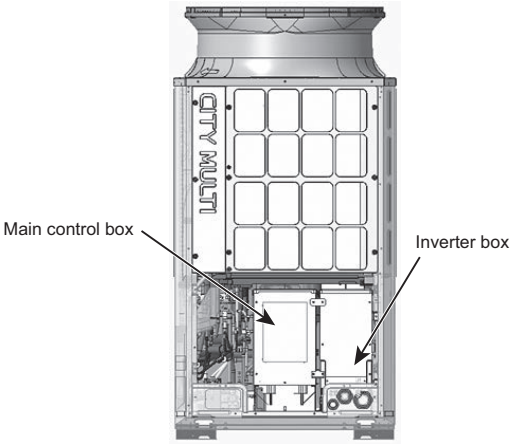

3) Remove the upper section of the duct by unscrewing the screws on the control box (on the inverter box on the (E)P72 models) shown in the figure below.
Check inside the duct for clogging, and remove any foreign objects found.

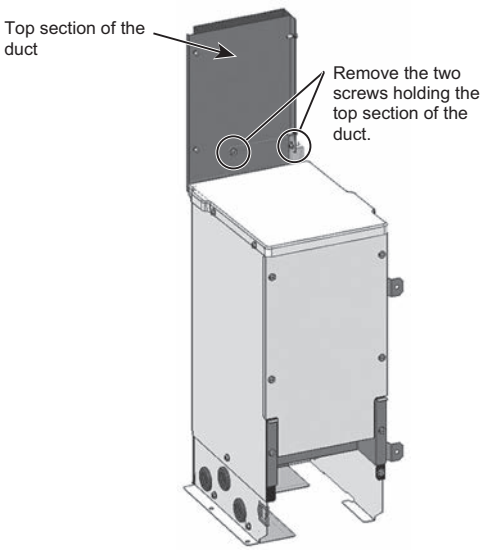

(E)P72

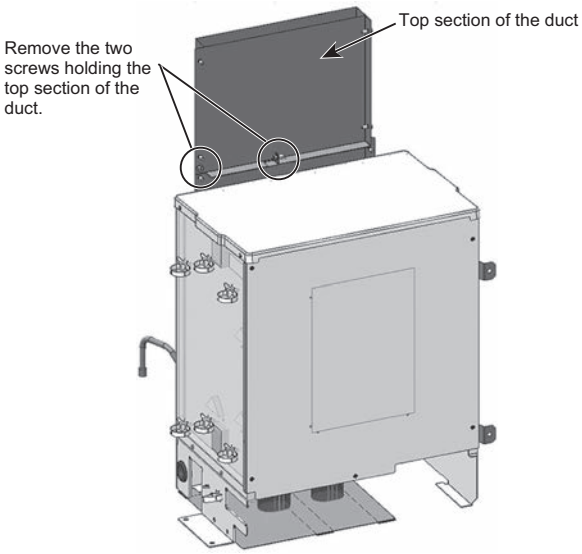

(E)P96 - 168

8-11 Control Circuit

8-11-1 Control Power Supply Function Block

1) PURY-(E)P72YNU-A/A1

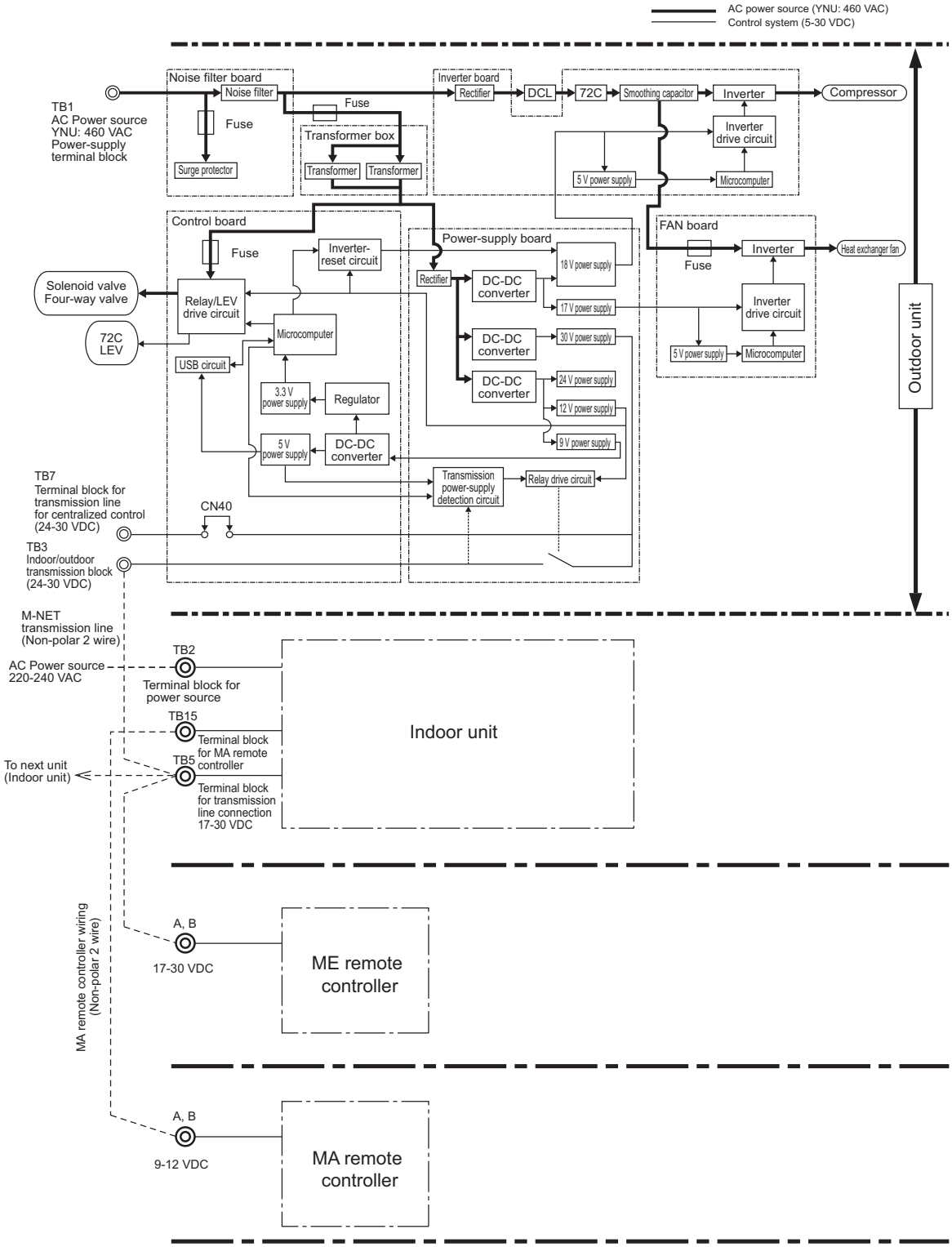

* MA remote controllers and ME remote controllers cannot be used together.
(Both the ME and MA remote controller can be connected to a system with a system controller.)

2) PURY-(E)P96 - (E)P144, P168YNU-A/A1

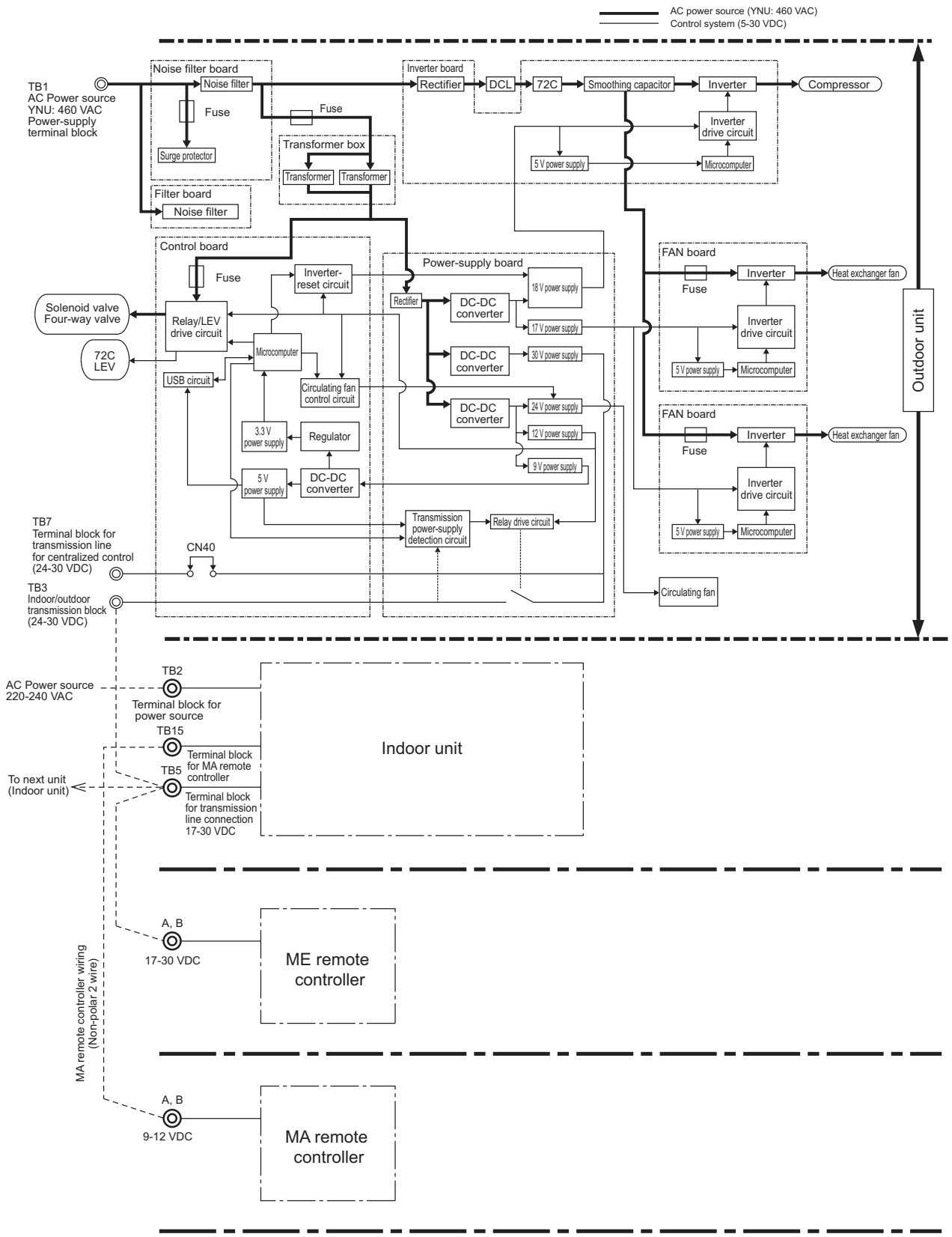

* MA remote controllers and ME remote controllers cannot be used together.
(Both the ME and MA remote controller can be connected to a system with a system controller.)

3) PURY-EP168 - EP240YNU-A/A1

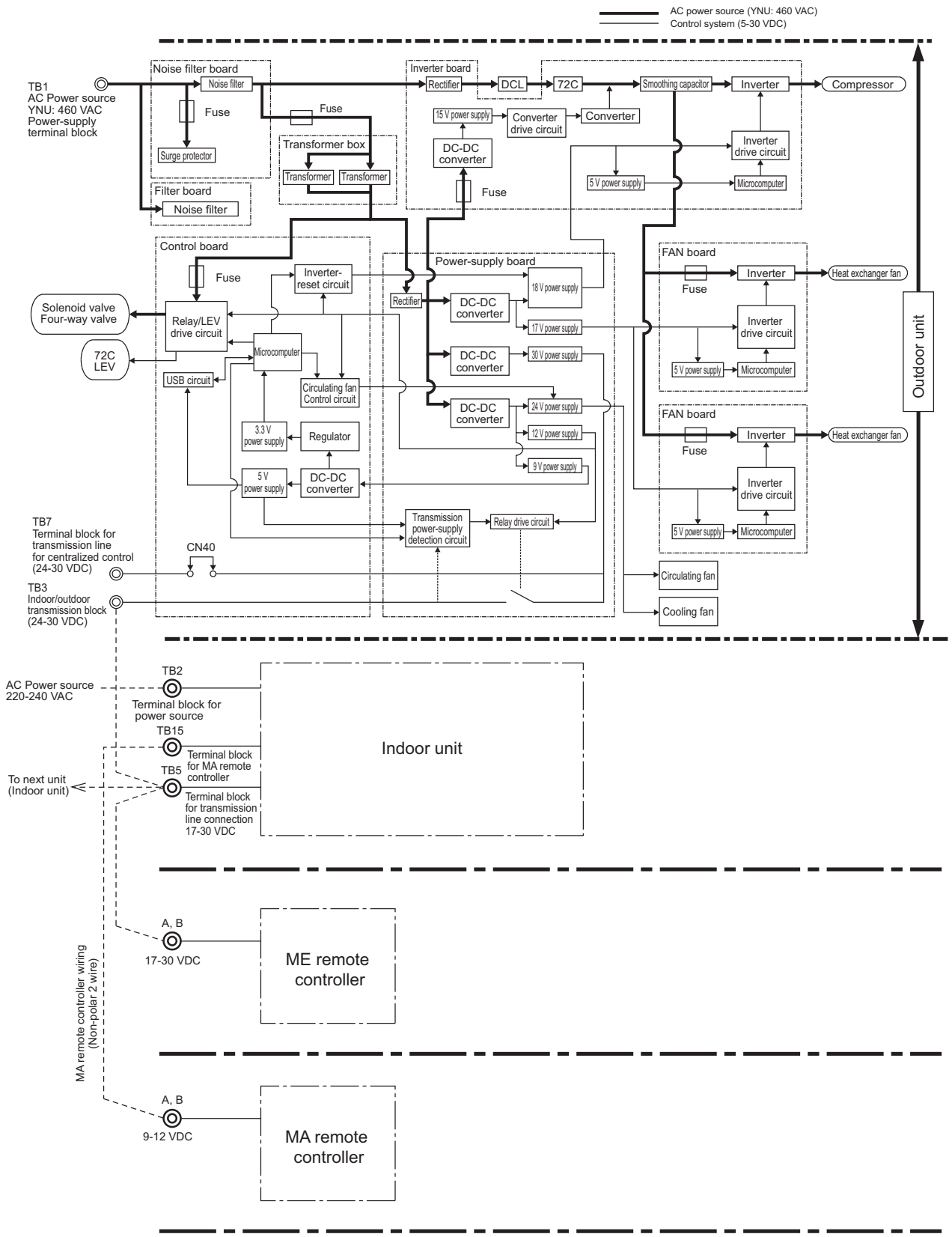

* MA remote controllers and ME remote controllers cannot be used together.
(Both the ME and MA remote controller can be connected to a system with a system controller.)

4) PURY-(E)P72TNU-A/A1

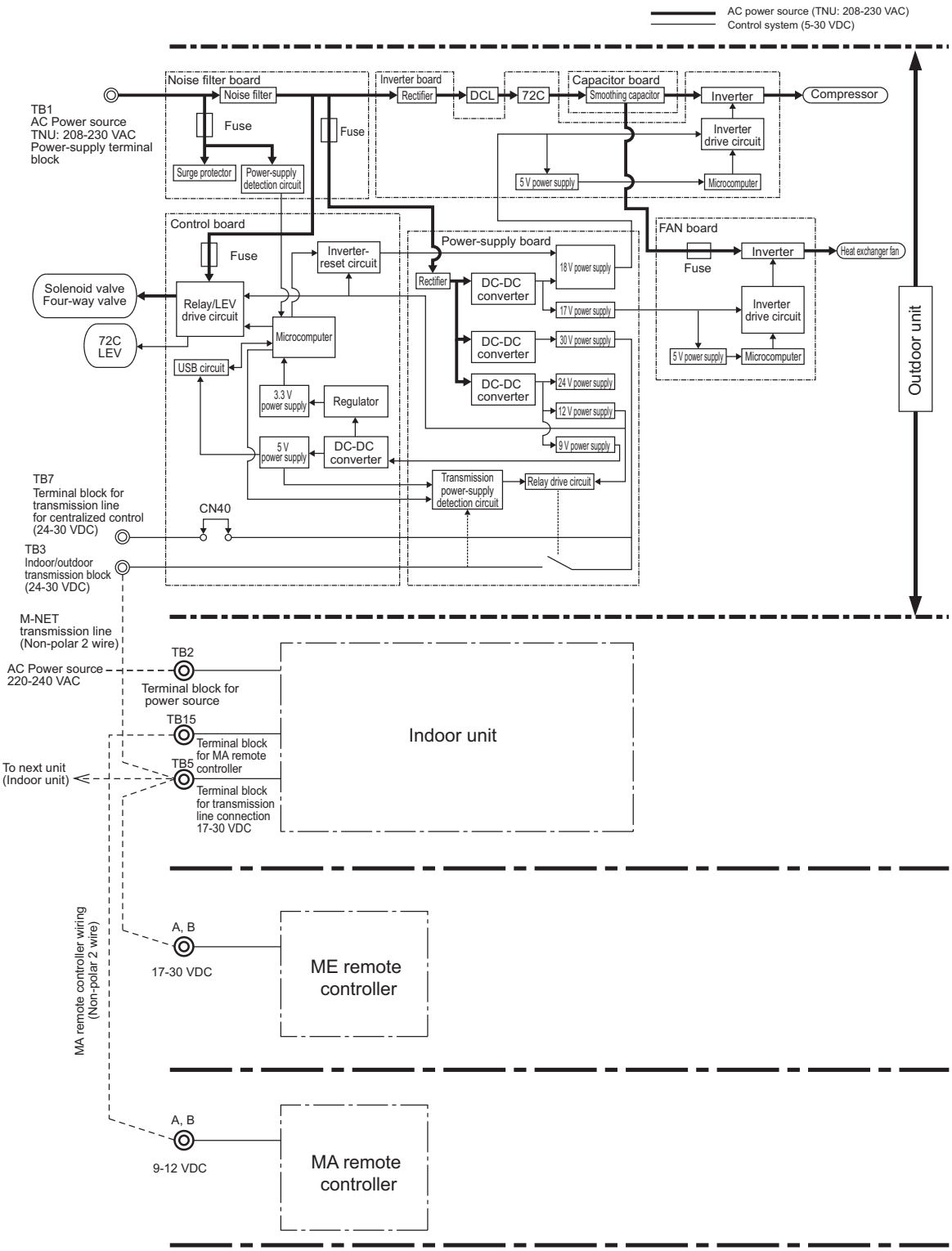

* MA remote controllers and ME remote controllers cannot be used together.
(Both the ME and MA remote controller can be connected to a system with a system controller.)

5) PURY-(E)P96 - (E)P144, P168TNU-A/A1

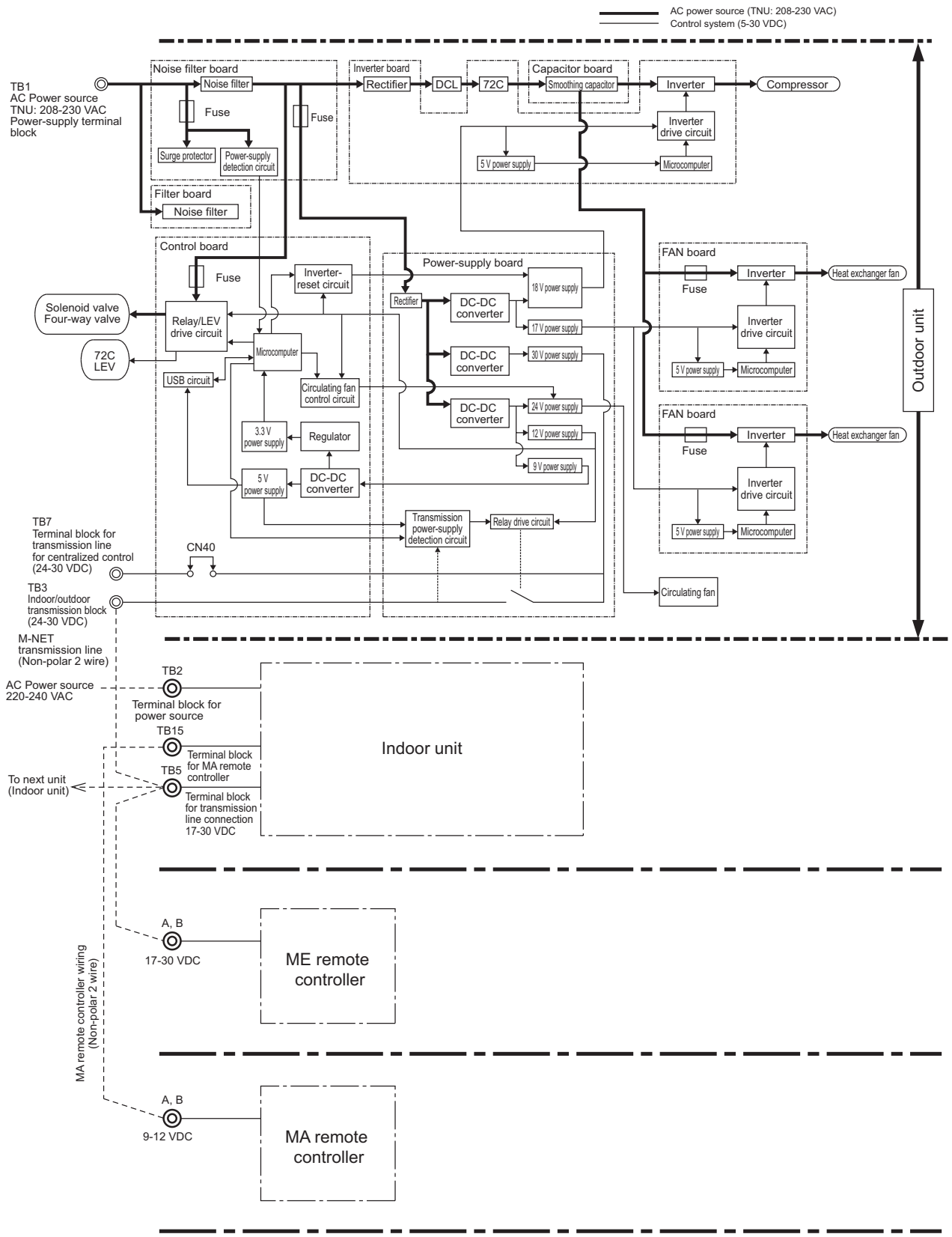

* MA remote controllers and ME remote controllers cannot be used together.
(Both the ME and MA remote controller can be connected to a system with a system controller.)

6) PURY-EP168 - EP240TNU-A/A1

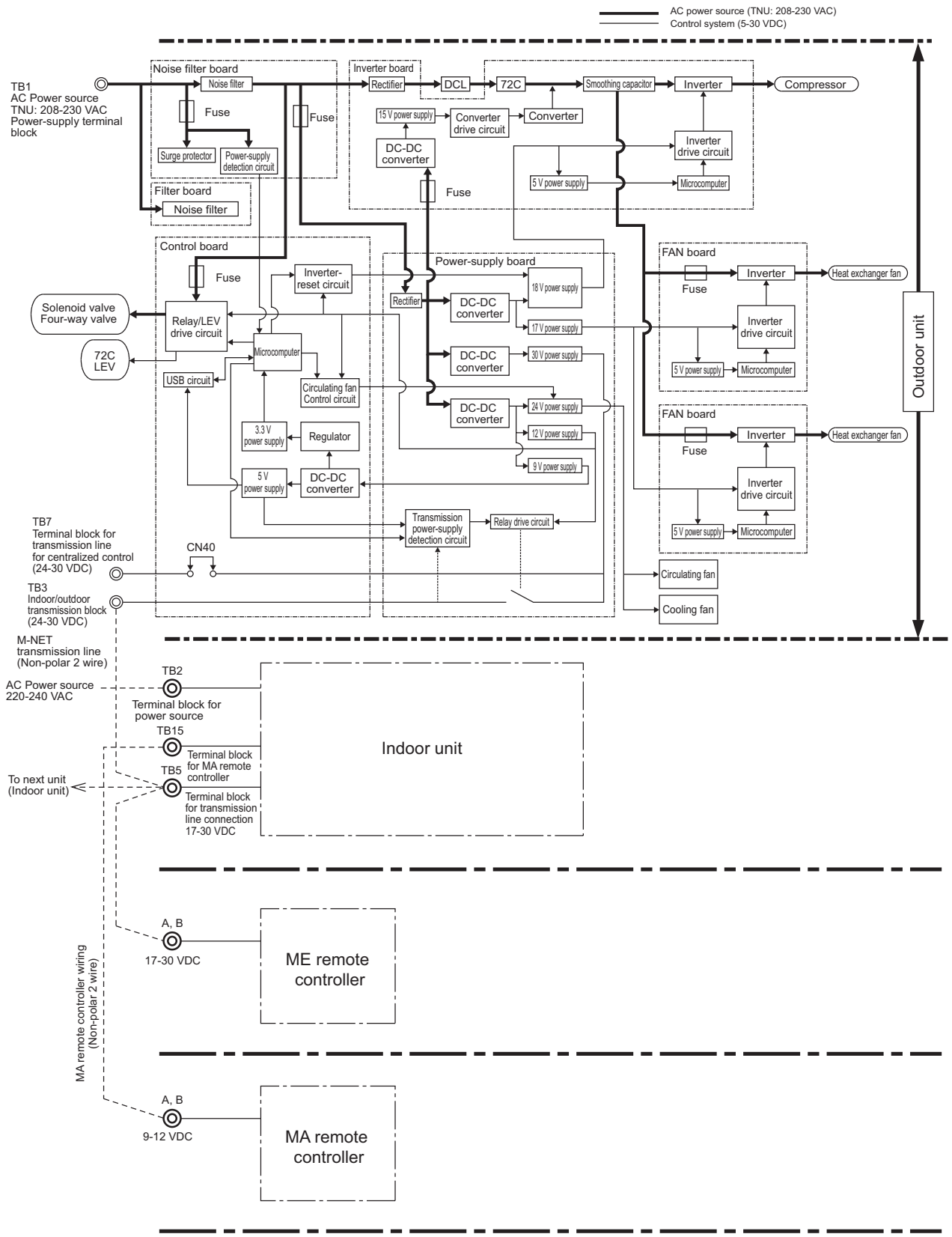

* MA remote controllers and ME remote controllers cannot be used together.
(Both the ME and MA remote controller can be connected to a system with a system controller.)

8-11-2 Troubleshooting Problems with Outdoor Unit Transmission Power Supply Circuit

1) PURY-(E)P72/(E)P96/(E)P120/(E)P144/P168YNU-A/A1

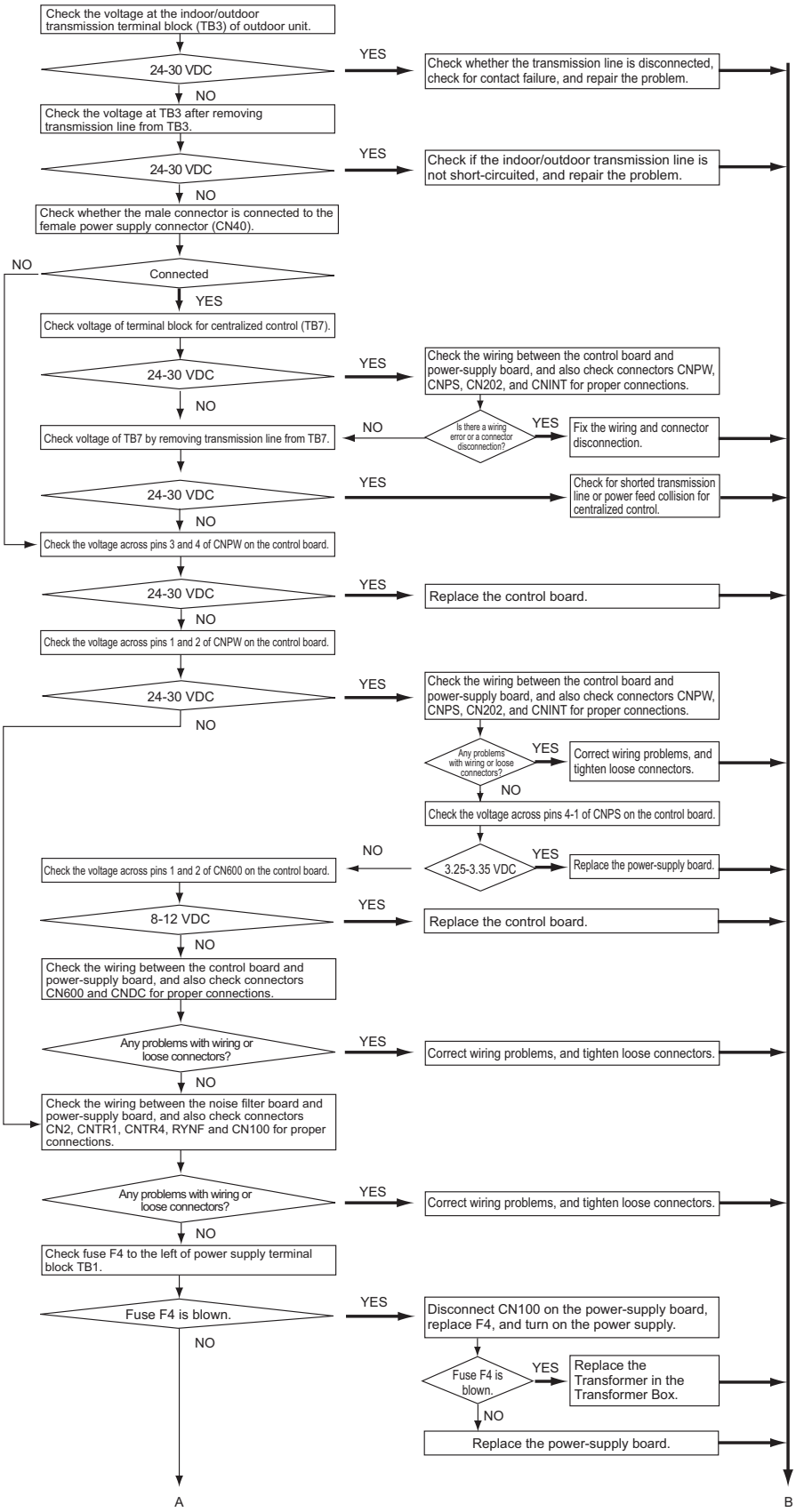

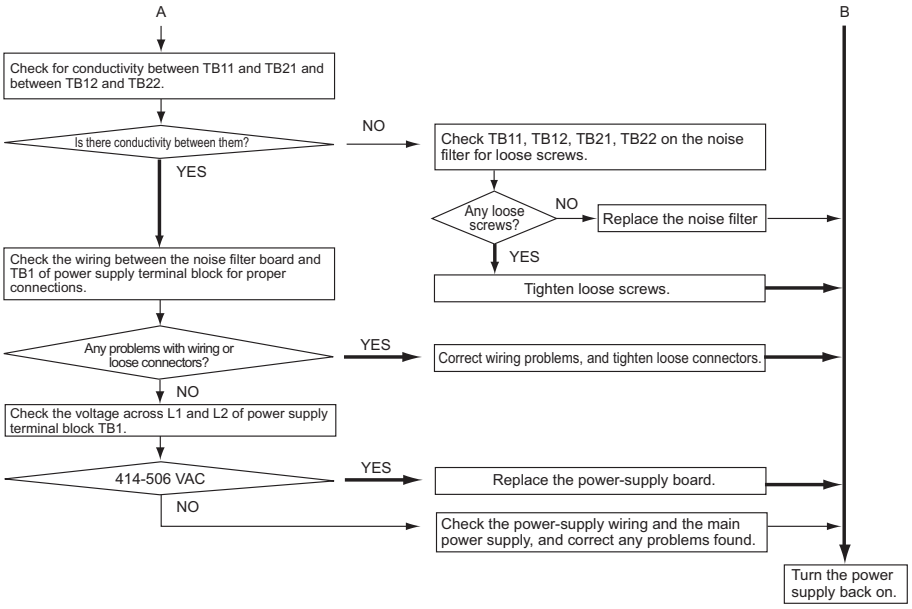
A
B
Check for conductivity between TB11 and TB21 and between TB12 and TB22.
Is there conductivity between them?
NO
Check TB11, TB12, TB21, TB22 on the noise filter for loose screws.
YES
Any loose screws?
NO
Replace the noise filter
YES
Tighten loose screws.
Check the wiring between the noise filter board and TB1 of power supply terminal block for proper connections.
Any problems with wiring or loose connectors?
YES
Correct wiring problems, and tighten loose connectors.
NO
Check the voltage across L1 and L2 of power supply terminal block TB1.
414-506 VAC
YES
Replace the power-supply board.
NO
Check the power-supply wiring and the main power supply, and correct any problems found.
Turn the power supply back on.

2) PURY-EP168 - EP240YNU-A/A1

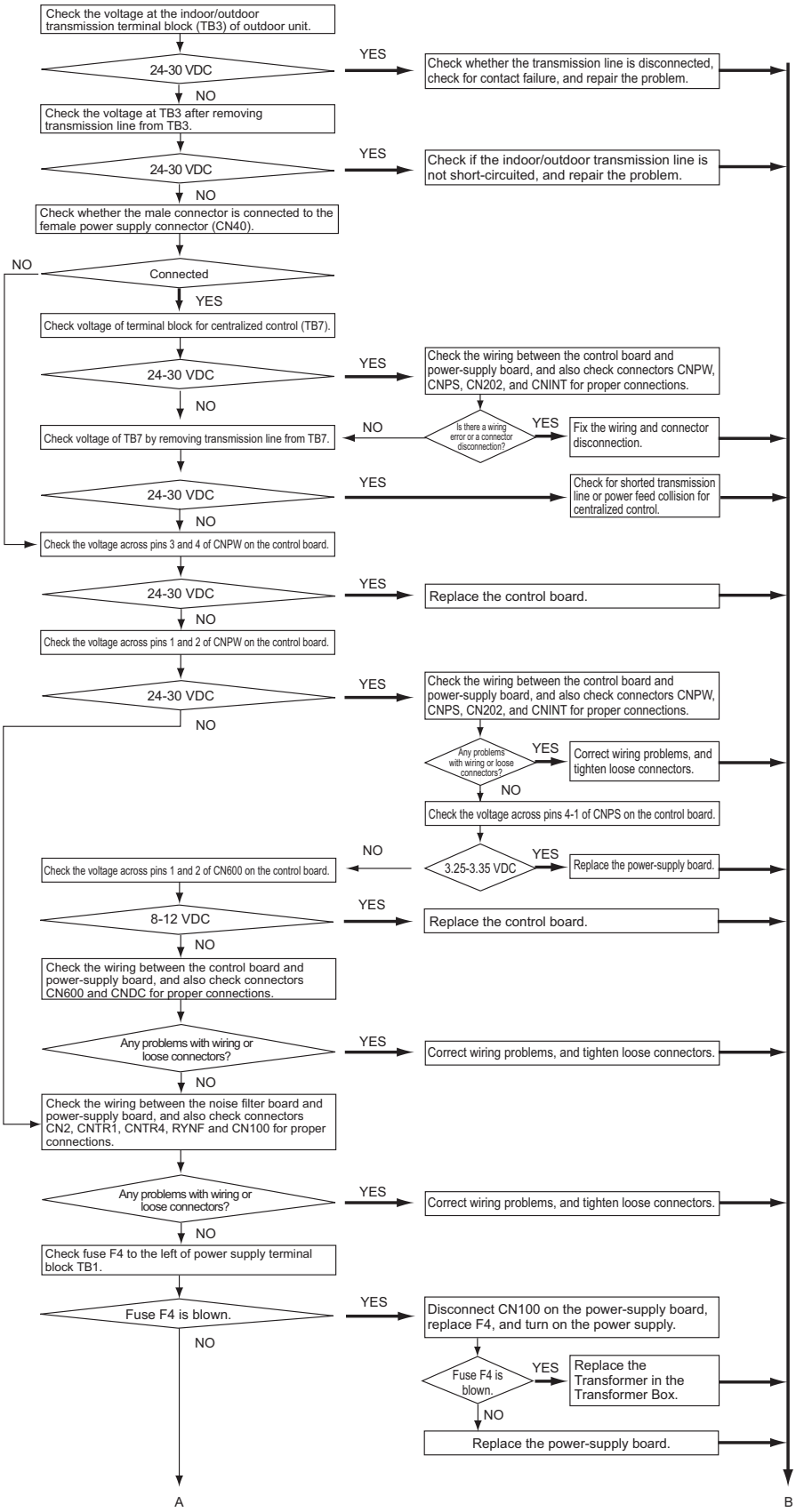

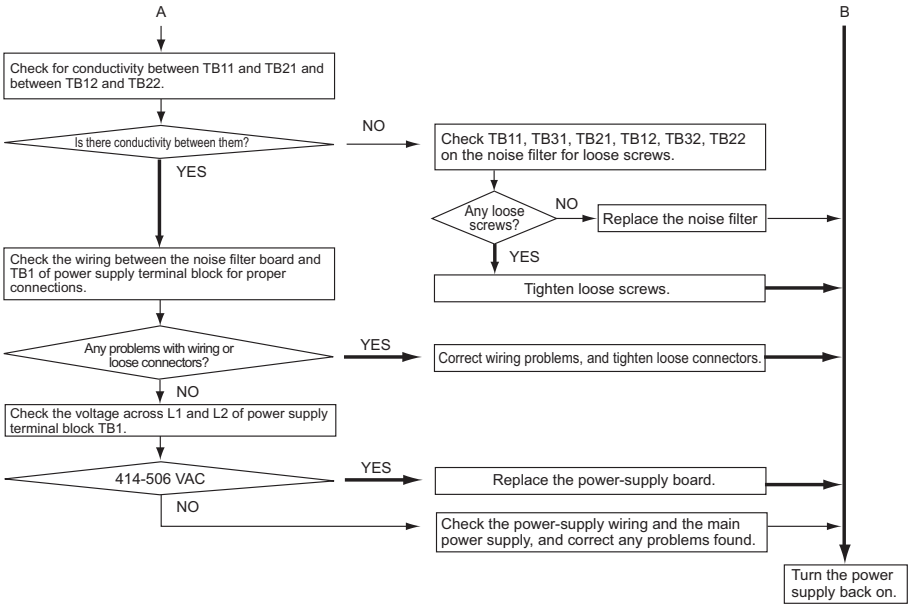
A
B
Check for conductivity between TB11 and TB21 and between TB12 and TB22.
Is there conductivity between them?
NO
Check TB11, TB31, TB21, TB12, TB32, TB22 on the noise filter for loose screws.
YES
Any loose screws?
NO
Replace the noise filter
YES
Tighten loose screws.
Check the wiring between the noise filter board and TB1 of power supply terminal block for proper connections.
Any problems with wiring or loose connectors?
YES
Correct wiring problems, and tighten loose connectors.
NO
Check the voltage across L1 and L2 of power supply terminal block TB1.
414-506 VAC
YES
Replace the power-supply board.
NO
Check the power-supply wiring and the main power supply, and correct any problems found.
Turn the power supply back on.

3) PURY-(E)P72/(E)P96/(E)P120/(E)P144/(E)P168/EP192/EP216/EP240TNU-A/A1

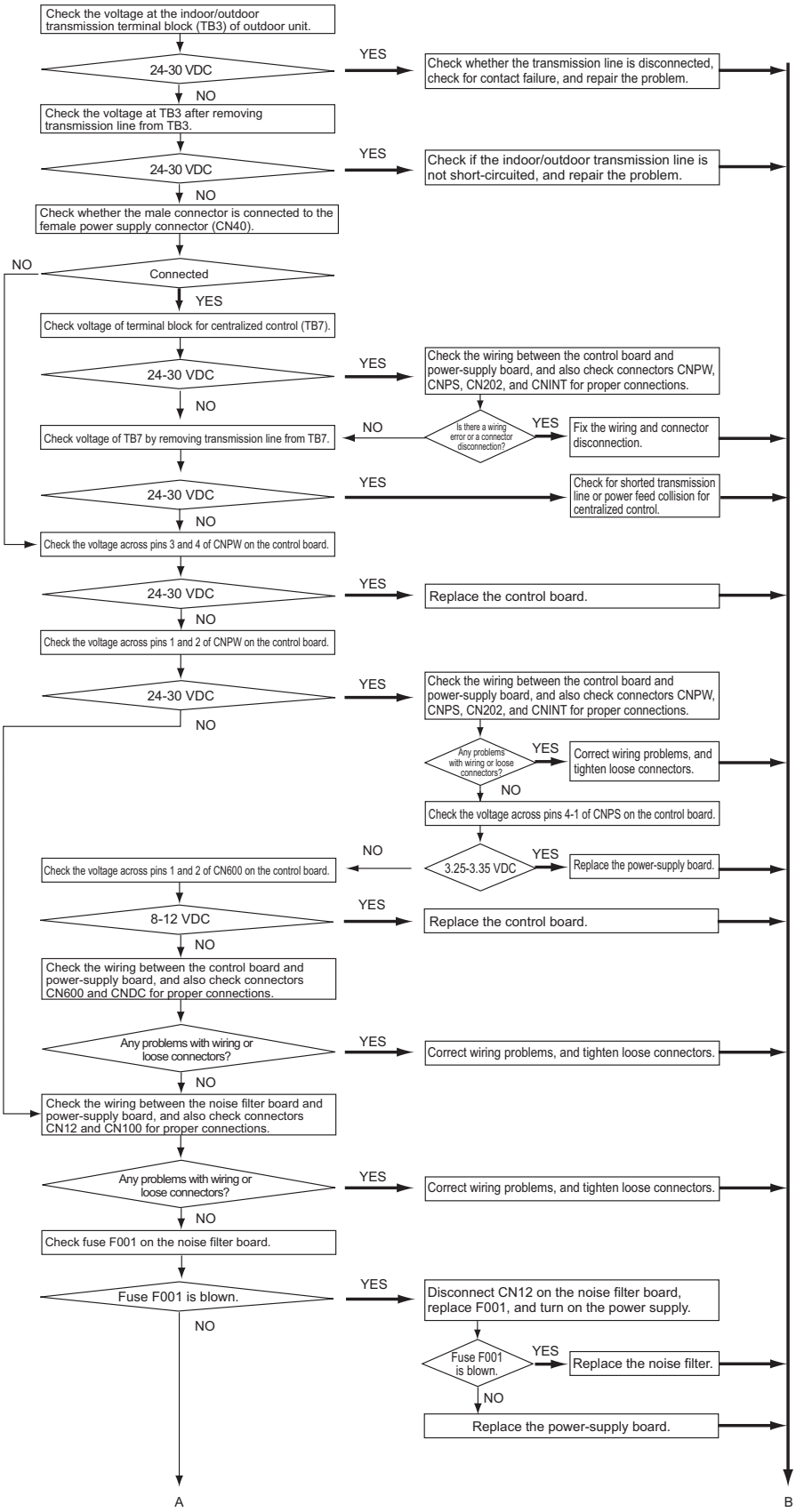

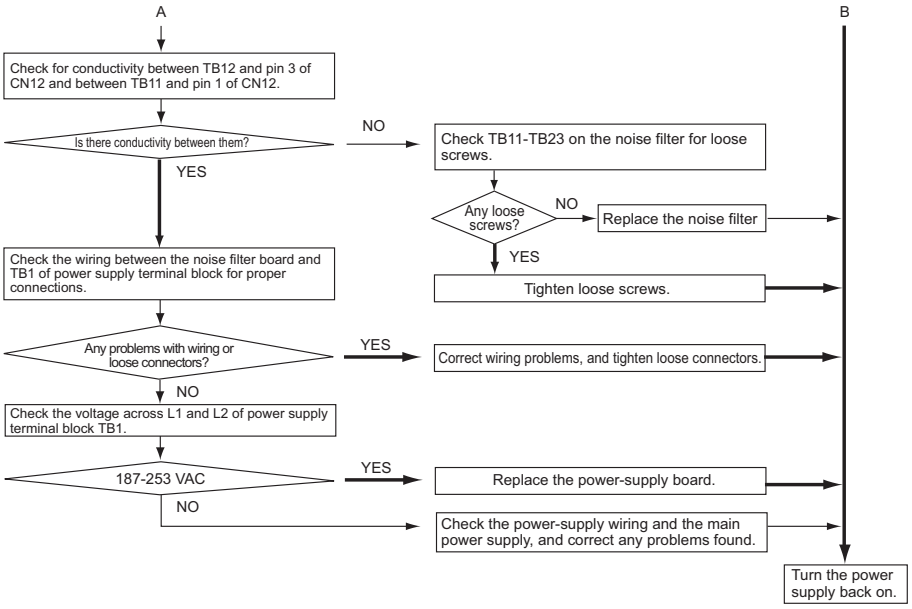
A
B
Check for conductivity between TB12 and pin 3 of CN12 and between TB11 and pin 1 of CN12.
Is there conductivity between them?
NO
YES
Check TB11-TB23 on the noise filter for loose screws.
Any loose screws?
NO
Replace the noise filter
YES
Tighten loose screws.
Check the wiring between the noise filter board and TB1 of power supply terminal block for proper connections.
Any problems with wiring or loose connectors?
YES
Correct wiring problems, and tighten loose connectors.
NO
Check the voltage across L1 and L2 of power supply terminal block TB1.
187-253 VAC
YES
Replace the power-supply board.
NO
Check the power-supply wiring and the main power supply, and correct any problems found.
Turn the power supply back on.

8-12 Measures for Refrigerant Leakage

1. Leak spot: In the case of extension pipe for indoor unit (Cooling season)

1) Mount a pressure gauge on the service check joint (CJ2) on the low-pressure side.
2) Connect the service port on the high-pressure gas service valve (BV2) to that on the low-pressure gas service valve (BV1) using a charge hose.
3) Stop all the indoor units. While the compressor is being stopped, turn the high-pressure gas service valve (BV2) on the outdoor unit 45 degrees in the close direction as shown below, and fully open the low-pressure gas service valve (BV1). (Do not close BV2 completely. Closing BV2 will cause the unit to stop in step 4.)
   *Pump down operation can be performed with BV1 and BV2 open. It will take less to collect refrigerant when BV2 is closed 45 degrees.

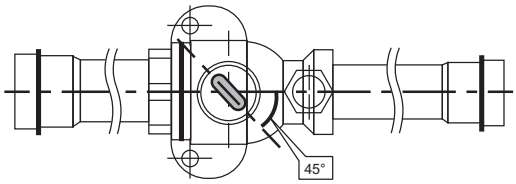

4) Stop all the indoor units; turn on SW4 (912) on the outdoor unit control board while the compressor is being stopped. (Pump down mode will start, and all the indoor units will run in cooling test run mode.)
5) In the pump down mode (SW4 (912)), all the indoor units and compressors will automatically stop when the low pressure (63LS) reaches 0.383MPa [55psi] or less or 15 minutes have passed after the pump mode started. Stop all the indoor units and compressors when the pressure indicated by the pressure gauge, which is on the check joint (CJ2) for low-pressure service, reaches 0.383MPa [55psi] or 20 minutes pass after the pump down operation is started.
6) Close the service ball valve (BV1) on the low-pressure pipe and the service ball valve (BV2) on the high-pressure pipe on the outdoor unit.
7) Collect the refrigerant that remains in the extended pipe for the indoor unit. Do not discharge refrigerant into the atmosphere when it is collected.
8) Repair the leak.
9) After repairing the leak, vacuum[*1]the extension pipe and the indoor unit.
10) To adjust refrigerant amount, open the ball valves (BV1 and BV2) inside the outdoor unit, and turn off SW4 (912).

2. Leak spot: In the case of outdoor unit (Cooling season)

(1) Run all the indoor units in the cooling test run mode.

1) To run the indoor unit in test run mode, turn SW4 (769) on the outdoor unit control board to ON.
2) Change the setting of the remote controller for all the indoor units to the cooling mode.
3) Check that all the indoor units are performing a cooling operation.

(2) Check the SC16 value.
(This value can be displayed on the LED by setting the self-diagnosis switch SW4 (SW6-10: OFF) on the outdoor unit control board.)

1) When SC16 is 10°C [18°F] or above: Go to the next item (3).
2) When the SC16 value is below 10°C [18°F]: After the compressor has stopped, extract the refrigerant in the system, repair the leak, evacuate the air from the system [*1], and charge the system with refrigerant. (If the leak is in the outdoor unit, follow the same procedure as listed under "heating season.")

SC16 self-diagnosis switch

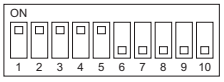

The figure at left shows that the switches 1 through 5 are set to ON and 6 through 10 are set to OFF.

(3) Stop all the indoor units, and stop the compressor.

1) To stop all the indoor units and the compressors, turn SW4 (769) on the outdoor control board from ON to OFF.
2) Check that all the indoor units are being stopped.

*1. For details, refer to the following page(s). [1-3-3 Vacuum Drying]

(4) Close the ball valves (BV1 and BV2).

(5) Collect the refrigerant that remains inside the outdoor unit. Do not discharge refrigerant into air into the atmosphere when it is collected.

(6) Repair the leak.

(7) After repairing the leak, replace the dryer with the new one, and perform evacuation*1 inside the outdoor unit.

(8) To adjust refrigerant amount, open the ball valves (BV1 and BV2) inside the outdoor unit.

3. Leak spot: In the case of extension pipe for indoor unit (Heating season)

(1) Run all the indoor units in heating test run mode.

1) To run the indoor unit in test run mode, set SW4 (769) on the outdoor unit control board to ON.
2) Change the setting of the remote controller for all the indoor units to the heating mode.
3) Check that all the indoor units are performing a heating operation.

(2) Stop all the indoor units, and stop the compressor.

1) To stop all the indoor units and the compressors, turn SW4 (769) on the outdoor control board from ON to OFF.
2) Check that all the indoor units are stopped.

(3) Close the ball valves (BV1 and BV2).

(4) Collect the refrigerant that remains inside the indoor unit. Do not discharge refrigerant into air into the atmosphere when it is collected.

(5) Repair the leak.

(6) After repairing the leak, perform evacuation of the extension pipe*1for the indoor unit, and open the ball valves (BV1 and BV2) to adjust refrigerant.

4. Leak spot: In the case of outdoor unit (Heating season)

1) Collect the refrigerant in the entire system (outdoor unit, extended pipe and indoor unit). Do not discharge refrigerant into the atmosphere when it is collected.
2) Repair the leak.
3) Repair the leak, and evacuate the air from the entire system *1. Then, calculate the proper amount of refrigerant to be added (outdoor unit + extension pipe + indoor unit), and charge the system with that amount. For details, refer to the following page(s). [6-3-3 Maximum refrigerant charge]

*1. For details, refer to the following page(s). [1-3-3 Vacuum Drying]

8-13 Parts Replacement Instructions <Type A/Type A1>

8-13-1 Ensuring Maintenance Space (Preparation for the Maintenance of Refrigerant Circuit Parts) <Type A/Type A1>

1. S-module

Take the following procedures to ensure sufficient maintenance space and good visibility.

(1) Remove the front panel from the unit by unscrewing the eight screws. (See Figure 1.) *Figure 1 shows the unit without the front panel.
(2) Remove the drain pan cover by unscrewing the screw and cutting the cable tie. (See Figures 2 and 3.)
When re-placing the drain pan cover after the completion of maintenance work, make sure that the silicon tube is properly placed on the defrost pipe, and then fix the drain pan cover in place with a cable tie. (Figures 2 and 3 show the cable ties to be cut.)
(3) Remove the drain pan by unscrewing the two screws. (See Figure 2.)
Be sure to remove the two rod holders holding the check joints to the drain pan. (See Figure 3.)

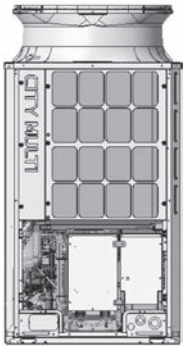

Figure 1

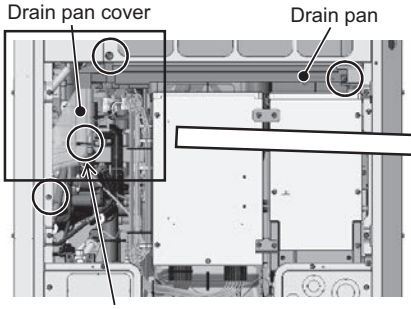

Figure 2

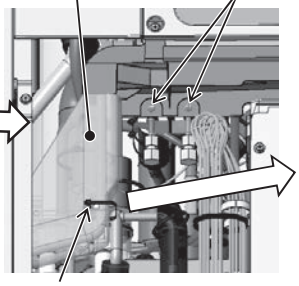

Figure 3

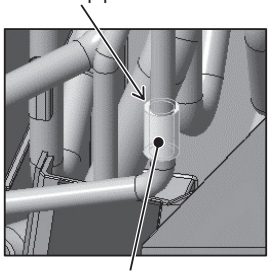

(4) Remove the top attachment connecting the main control box and the inverter control box by unscrewing the two screws. (See Figure 4.)
(5) Remove the bottom attachment connecting the main control box and the inverter control box by unscrewing the two screws. (See Figure 4.)
(6) Remove the two screws from the sheet metal secured on the pipe on the left of the main control box. (See Figure 4.)
(7) Remove the cover from the main control box by unscrewing the three screws. (See Figure 5.)
(8) Cut the two cable ties holding the weak electrical wiring inside the main control box in place, and loosen the four cable straps holding the weak and strong electrical wirings. (See Figure 6.)
(9) Cut the two cable ties holding the rubber bush at the bottom of the main control box. (See Figure 6.)
(10) Cut the three cable ties and loosen the two cable straps holding the weak electrical wiring outside the main control box. (See Figure 7.)

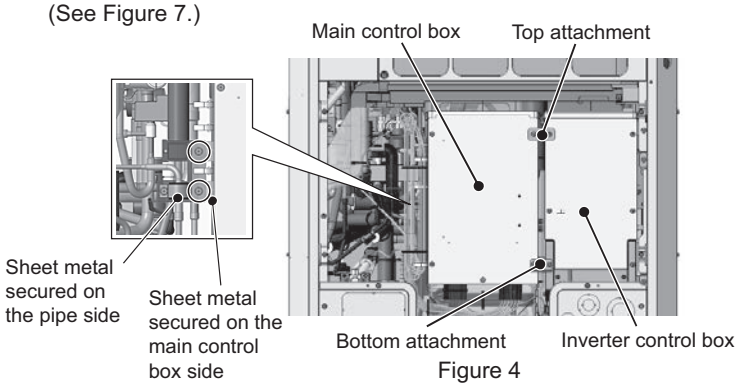

Figure 4

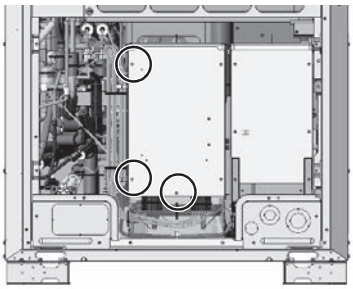
Figure 5

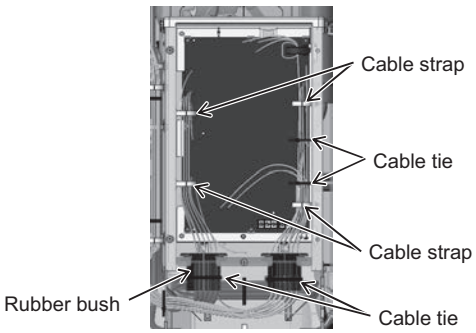

Figure 6

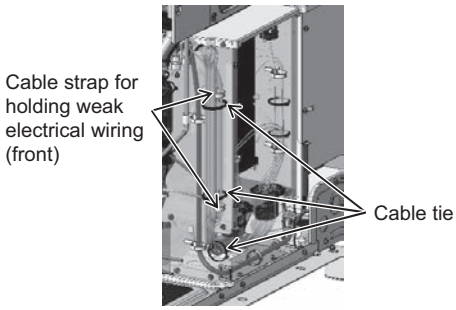

Figure 7

(11) Loosen the three cable straps holding the motor wiring outside and at the bottom of the main control box, and remove the wire from the two wire saddles. (See Figure 8.)
(12) Loosen the two cable straps holding the strong electrical wiring outside the main control box. (See Figure 9.)
(13) Cut the cable tie and loosen the two welding clamps holding the strong electrical wiring at the bottom of the main control box. (See Figure 10.)
(14) Unscrew the two screws holding the main control box. (See Figure 11.)

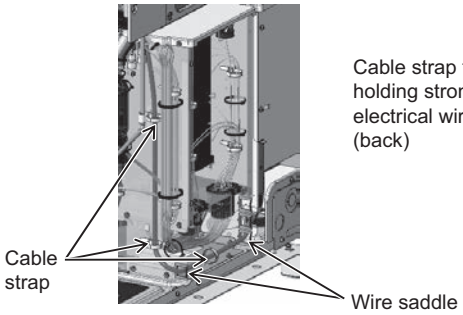

Figure 8

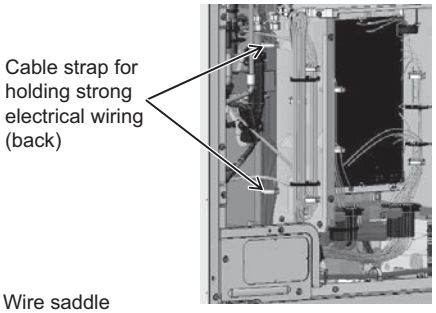

Figure 9

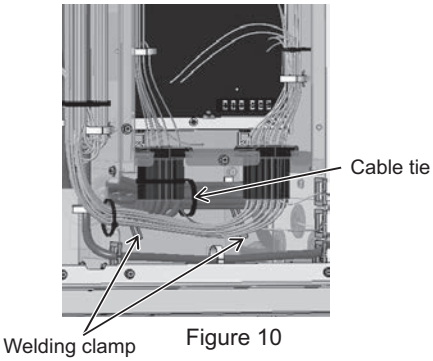

Figure 10

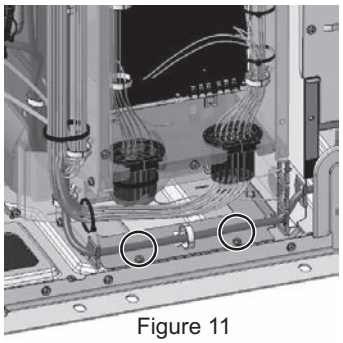
Figure 11

(15) Make sure that no undue force is applied to the wires from which cable straps were removed in steps (8) through (13). Position the bottom attachment that was removed in step (5) above on the fin guard as shown in Figure 13, and then hook the main control box on the attachment as shown in Figure 12.

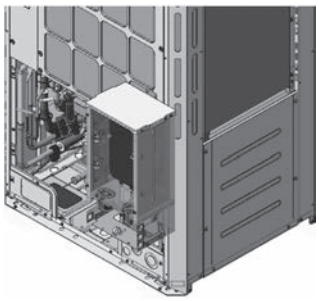
Figure 12

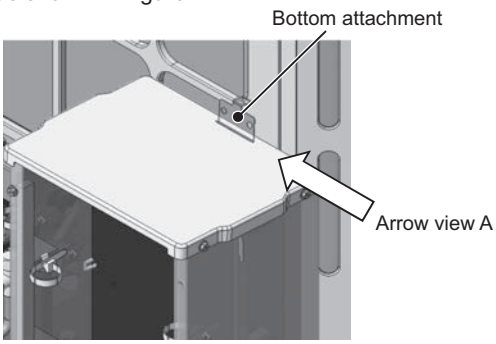

Figure 13

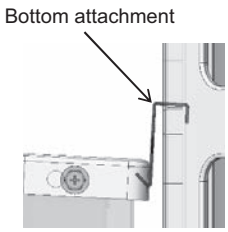

(16) Place the excess weak and strong electrical wirings in the space at the base legs as shown in Figure 14 to keep them from being caught during maintenance work.

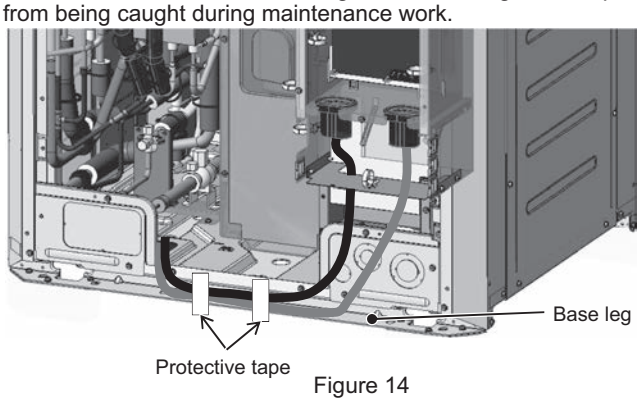

Figure 14

This step completes the procedure for ensuring maintenance space.

2. L-module

(1) Remove the front panel from the unit by unscrewing the 14 screws. (See Figure 1.) *Figure 1 shows the unit without the front panel.
(2) Remove the fin guard by unscrewing the 12 screws. (See Figure 1.)
(3) Remove the cable straps holding the weak and strong electrical wirings. (See Figure 2.)
(4) Remove the center pillar by unscrewing the five screws. (See Figure 1.)
(5) Remove the drain pan cover by unscrewing the screw and cutting the cable tie. (See Figures 2 and 3.)
When re-placing the drain pan cover, make sure that the silicon tube is properly placed on the defrost pipe, and then fix the drain pan cover in place with a cable tie.
(6) Remove the drain pan by unscrewing the two screws. (See Figure 2.)
Be sure to remove the two rod holders holding the check joints to the drain pan. (Figures 2 and 3 show the cable ties to be cut.)
(7) Remove the two cable straps holding the weak electrical wiring and the two cable straps holding the strong electrical wiring from the control box. (See Figure 4.)
(8) Place the excess weak and strong electrical wirings in the space at the base legs as shown in Figure 5 to keep them from being caught during maintenance work.

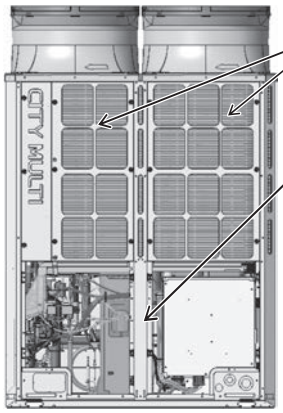

Figure 1

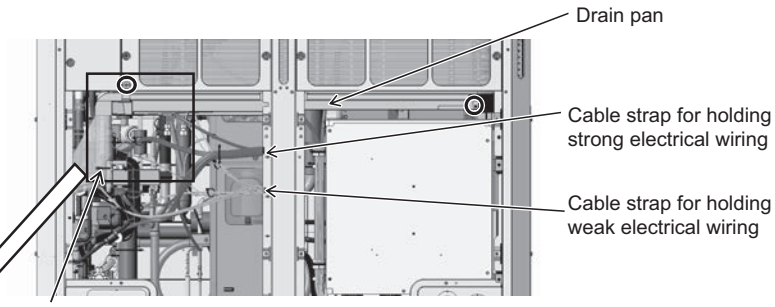

Figure 2

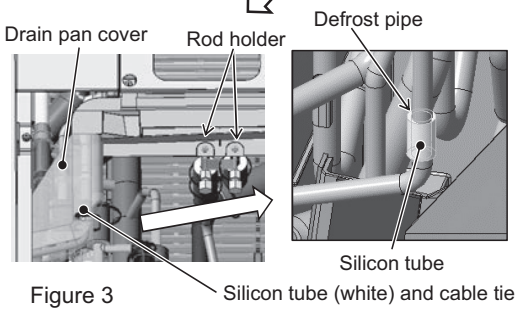

Figure 3

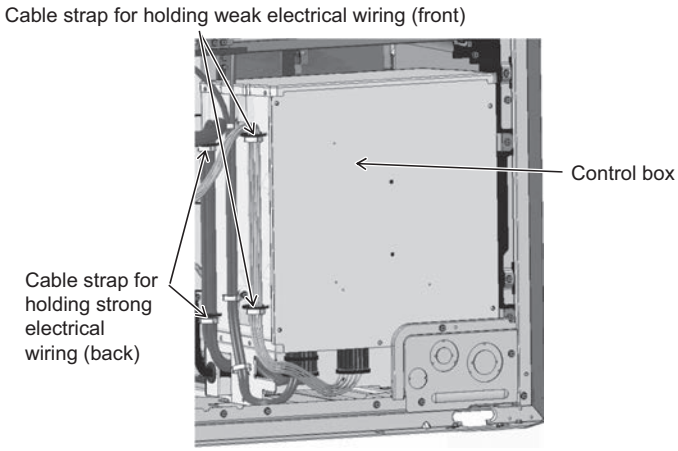

Figure 4

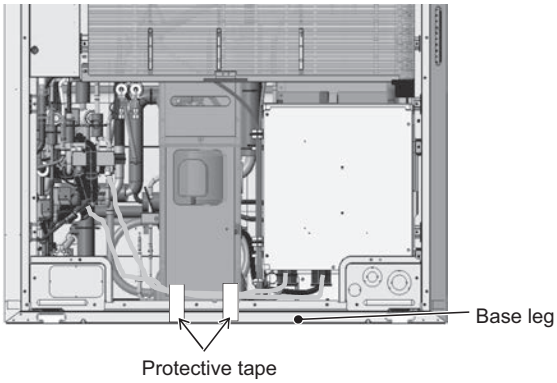

Figure 5

This step completes the procedure for ensuring maintenance space.

3. XL, EXL-module

(1) Remove the front panel from the unit by unscrewing the 14 screws. (See Figure 1.)
(2) Remove the external temperature sensor wiring from the left drain pan by cutting the two cable ties. Unhook the pipe cover from the left drain pan. (See Figure 3.)
(3) Remove the left drain pan by unscrewing the two screws. (See Figure 4.)
(4) Remove the right drain pan by unscrewing the two screws. (See Figure 5.)
(5) Remove the three cable straps from the center pillar. (See Figure 6.)
(6) Remove the right and left fin guards and the center pillar by unscrewing the 18 screws. (See Figure 7.)

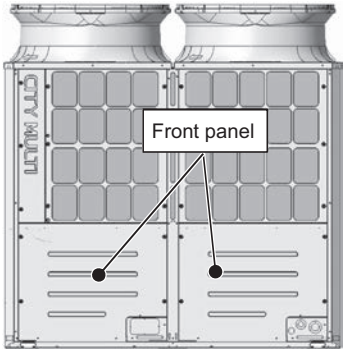

Figure 1

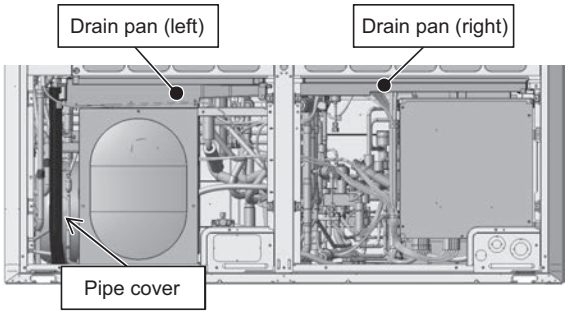

Figure 2

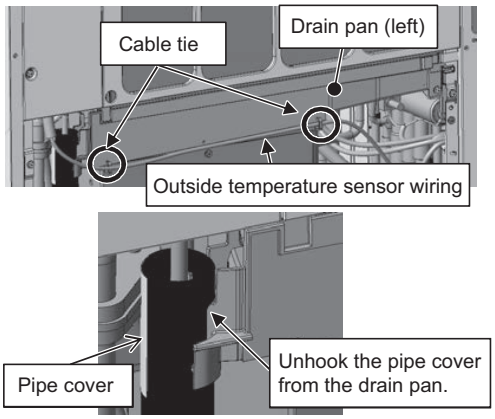

Figure 3

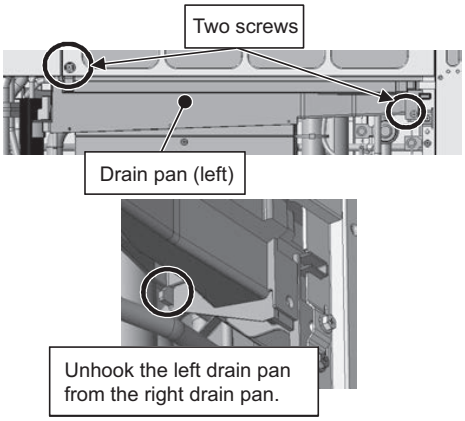

Figure 4

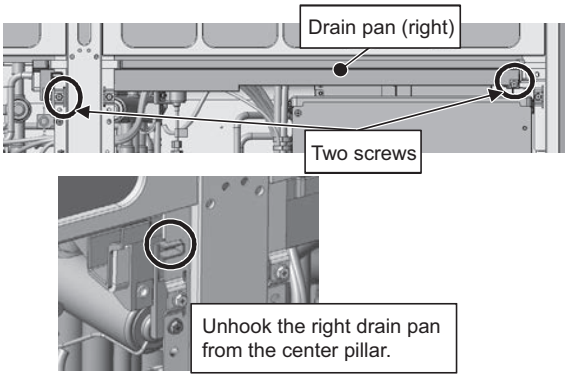

Figure 5

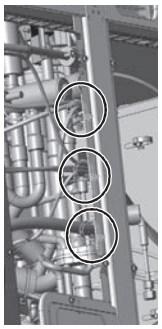

Figure 6

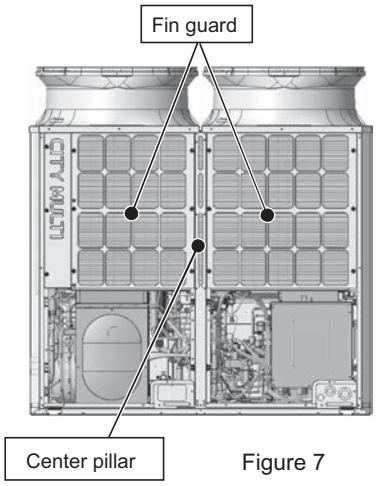

Figure 7

This step completes the procedure for ensuring maintenance space.

8-13-2 Notes on Wiring Installation <Type A>

- ♦If wiring was disconnected during maintenance, reconnect the wiring as follows.
- ♦Isolate the strong and the weak electrical wiring to avoid noise interference.

(1) S-module

FRONT VIEW

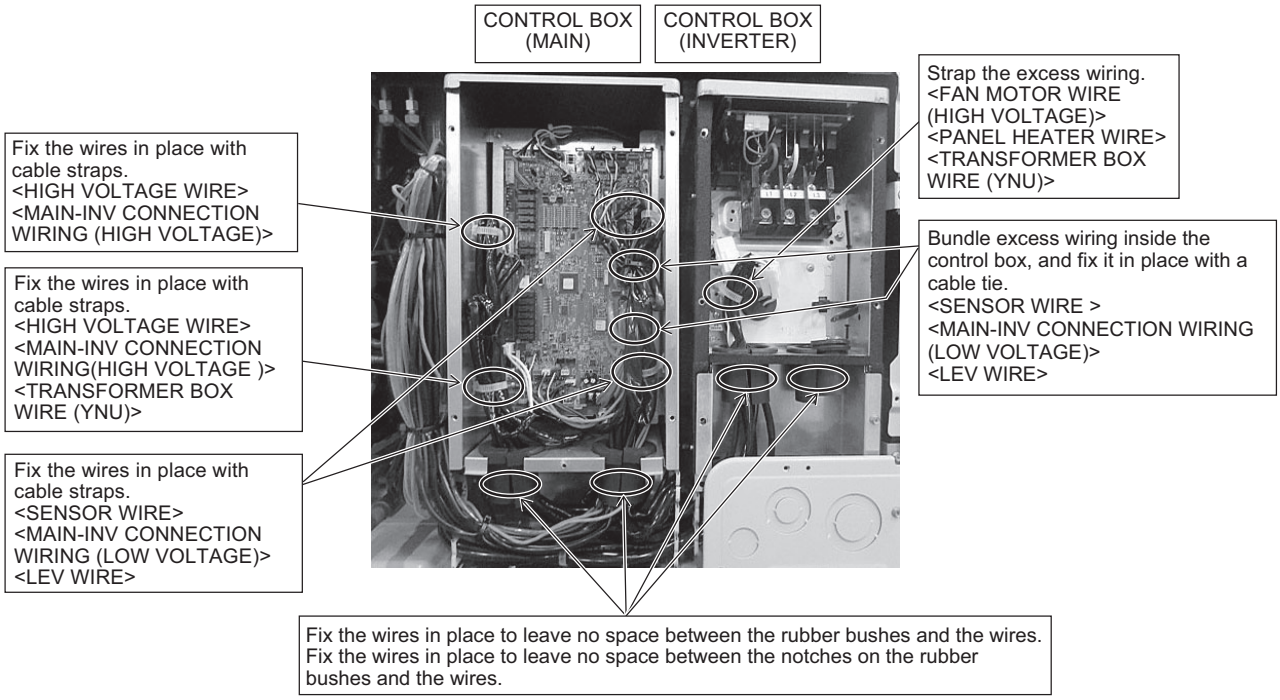

LEFT VIEW

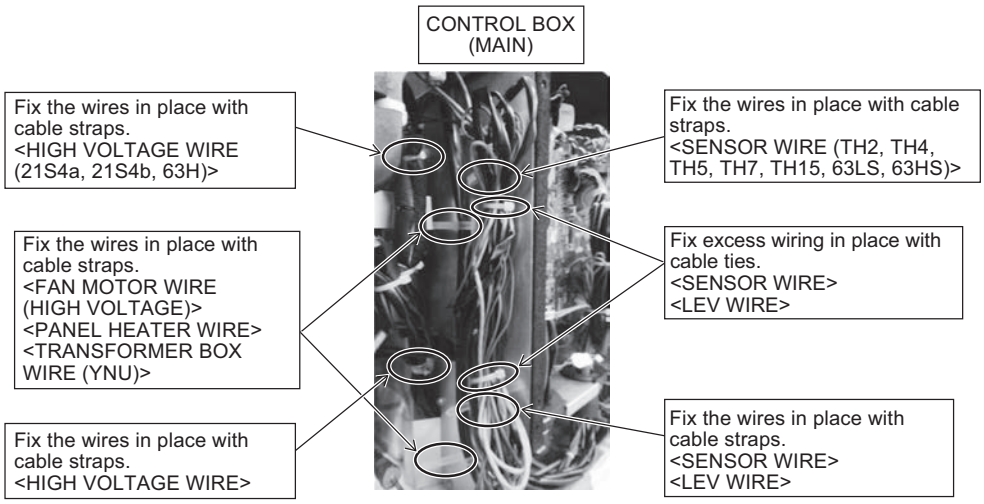

BOTTOM VIEW

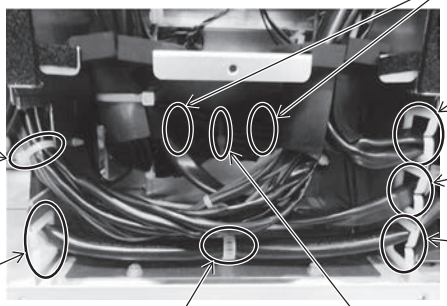

BOTTOM VIEW

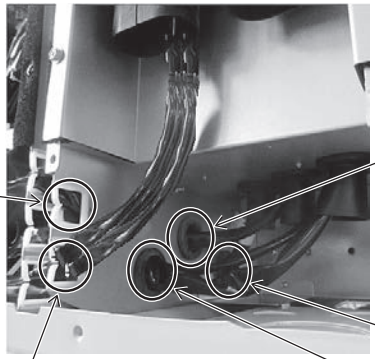

(2) L-module

FRONT VIEW

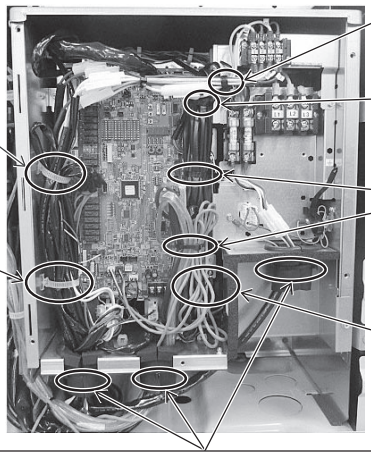

LEFT VIEW

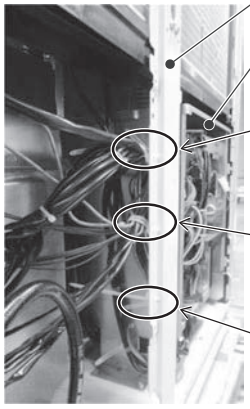

LEFT VIEW (TOP)

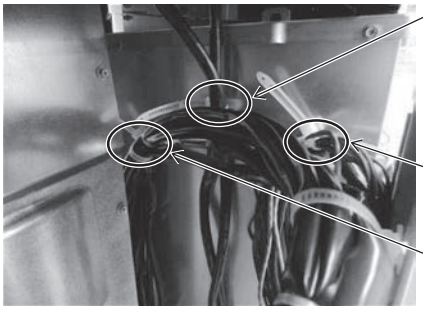

LEFT VIEW (BOTTOM)

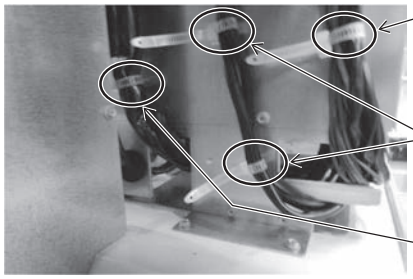

BOTTOM VIEW

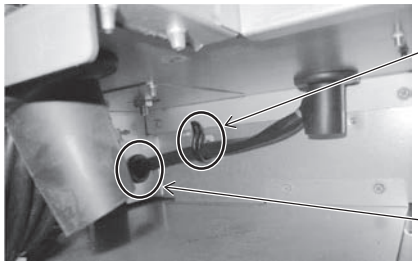

(3) XL-module

FRONT VIEW

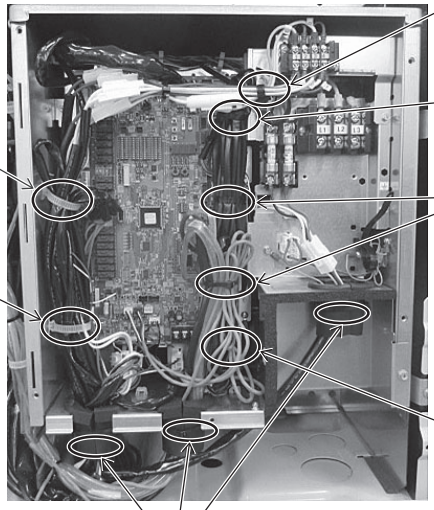

LEFT VIEW

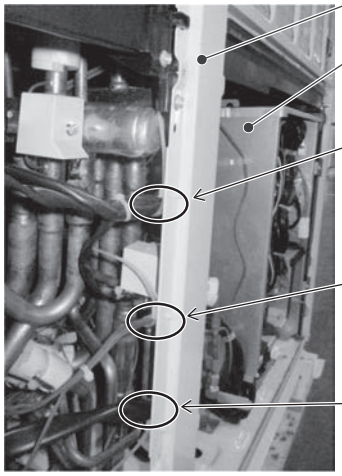

LEFT VIEW

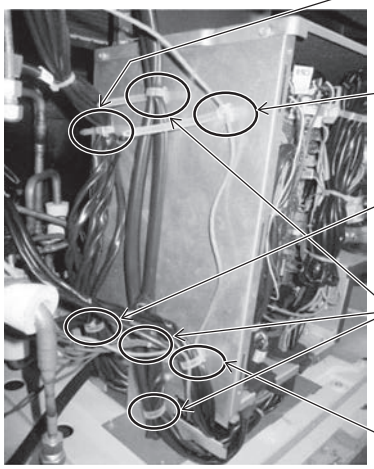

BOTTOM VIEW

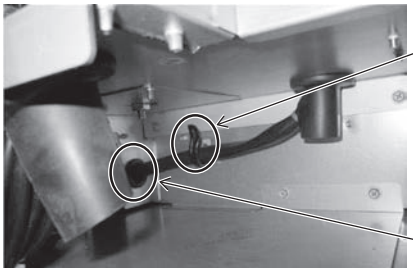

(4) EXL-module

FRONT VIEW

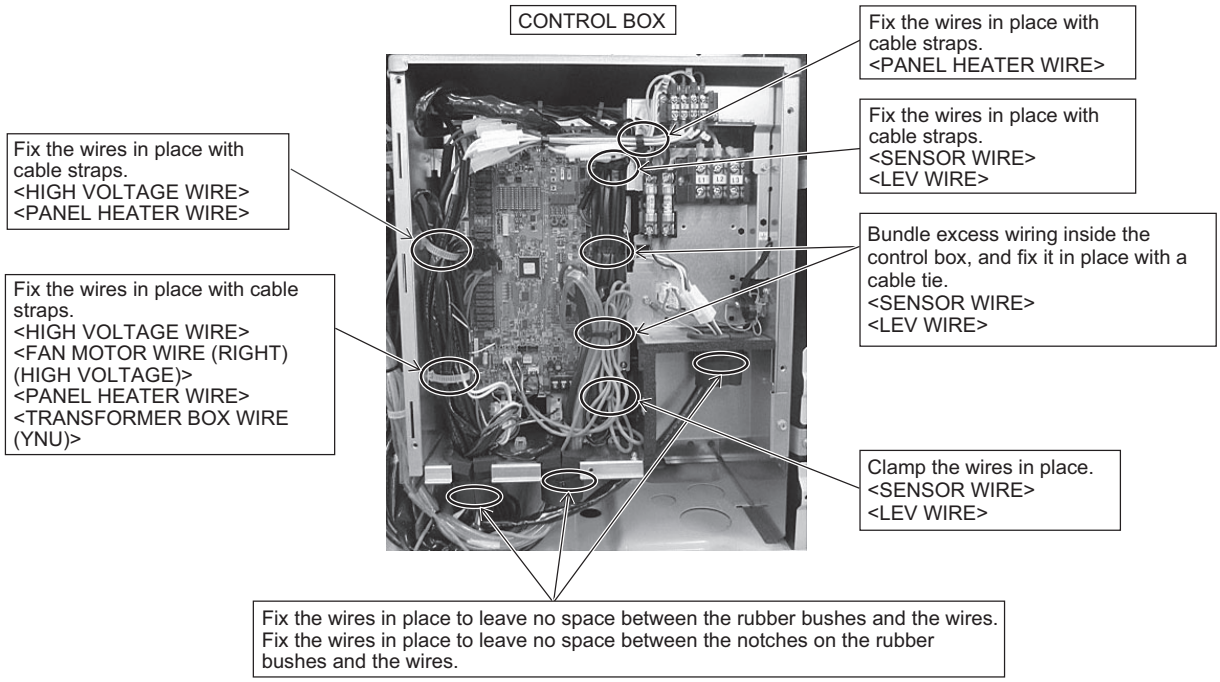

LEFT VIEW

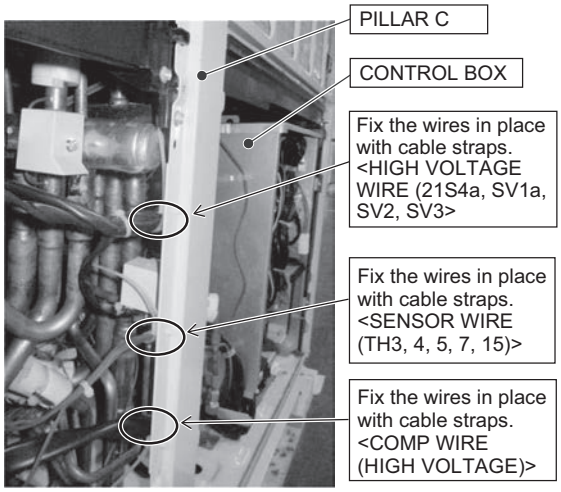

LEFT VIEW

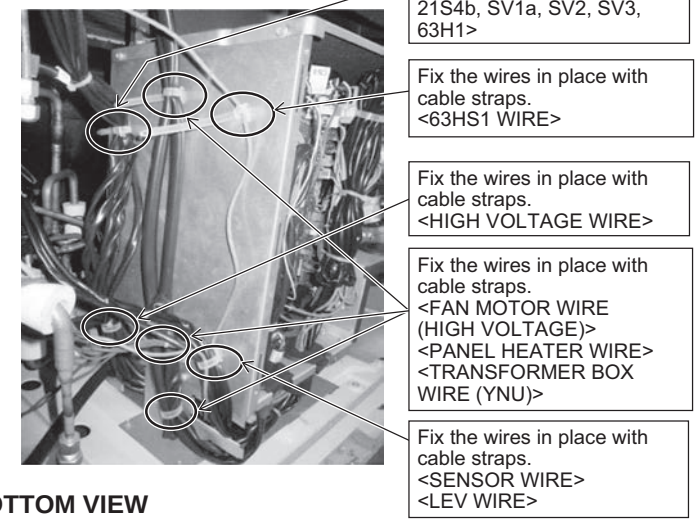

BOTTOM VIEW

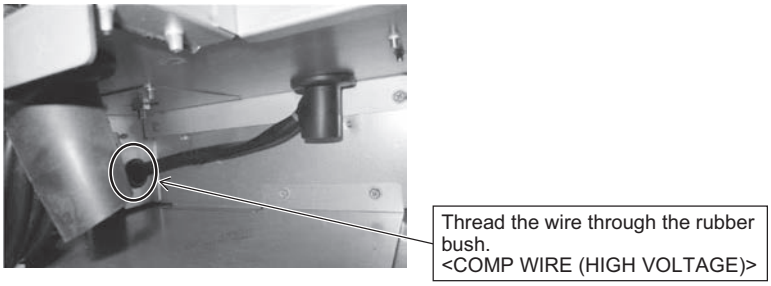

8-13-3 Notes on Wiring Installation <Type A1>

- If wiring was disconnected during maintenance, reconnect the wiring as follows.
- Isolate the strong and the weak electrical wiring to avoid noise interference.

(1) S-module

FRONT VIEW

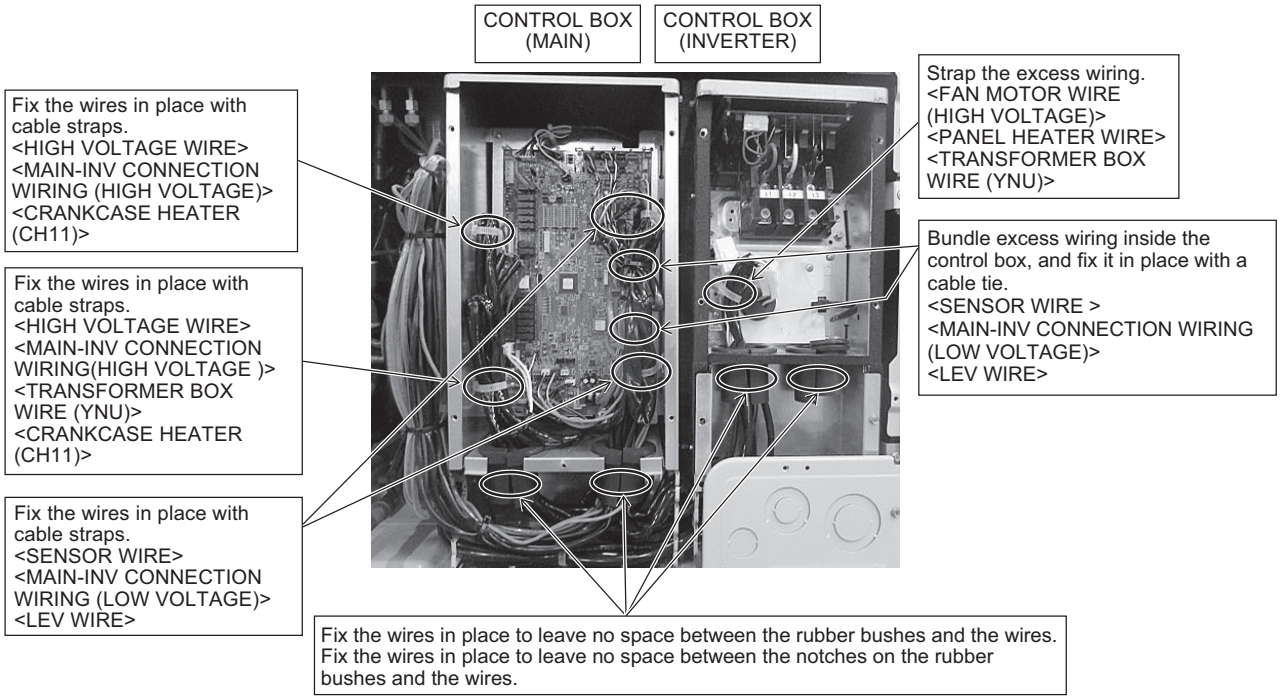

LEFT VIEW

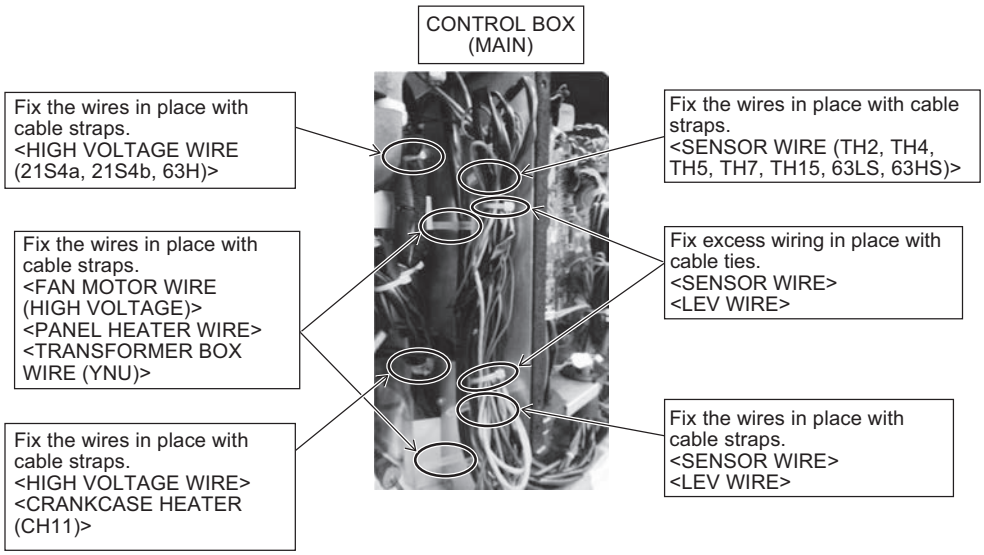

BOTTOM VIEW

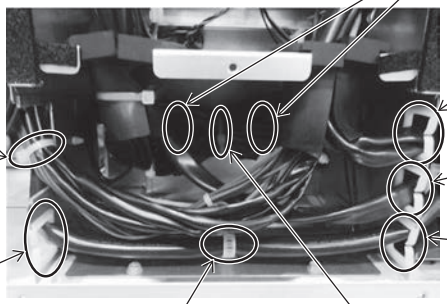

BOTTOM VIEW

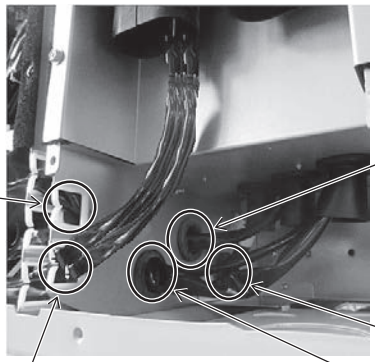

(2) L-module

FRONT VIEW

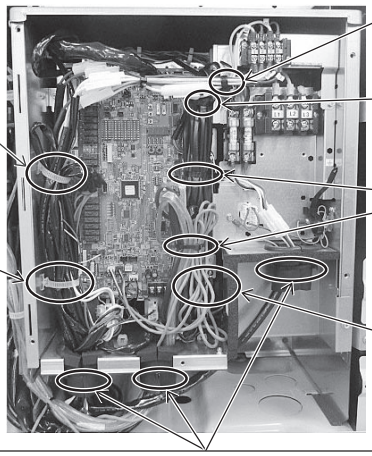

LEFT VIEW

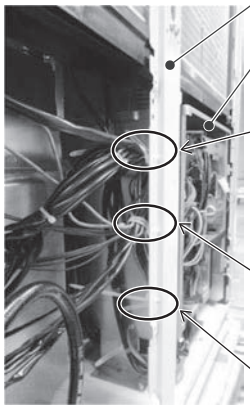

LEFT VIEW (TOP)

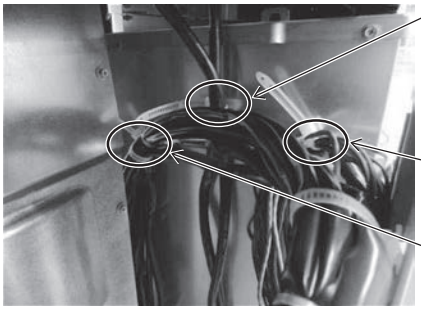

LEFT VIEW (BOTTOM)

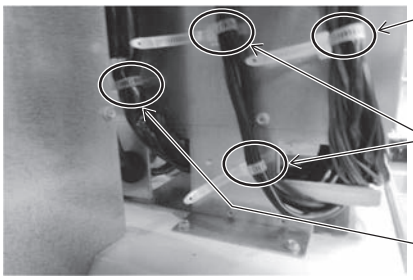

BOTTOM VIEW

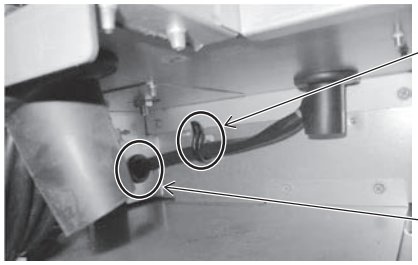

(3) XL-module

FRONT VIEW

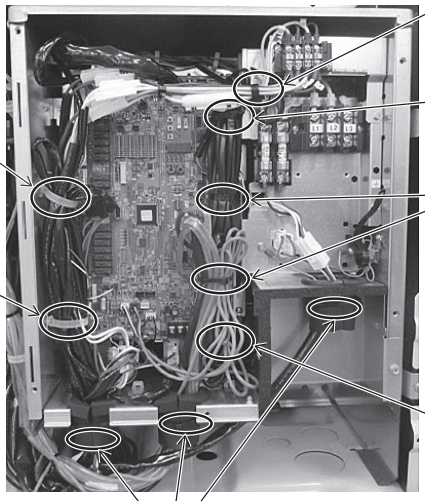

LEFT VIEW

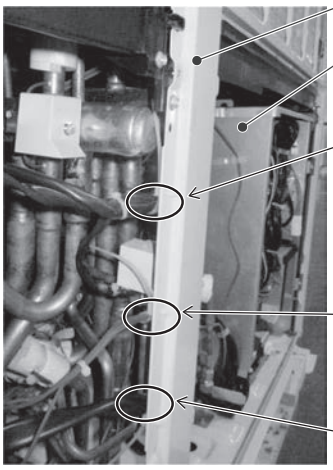

LEFT VIEW

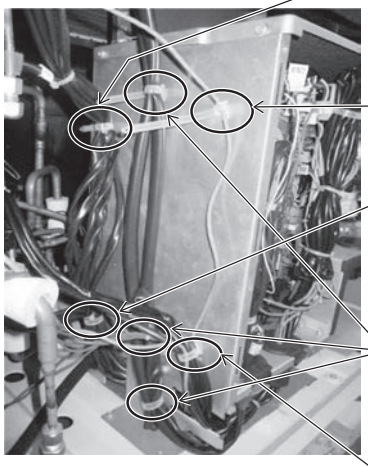

BOTTOM VIEW

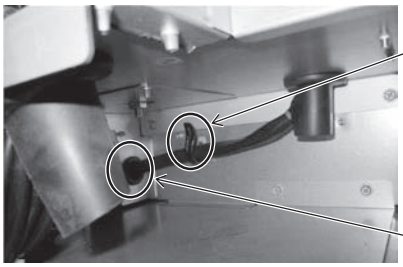

(4) EXL-module

FRONT VIEW

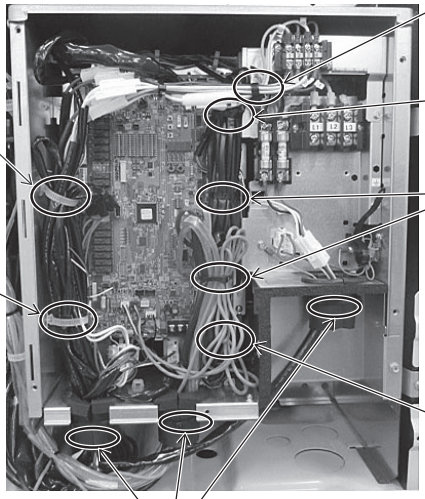

LEFT VIEW

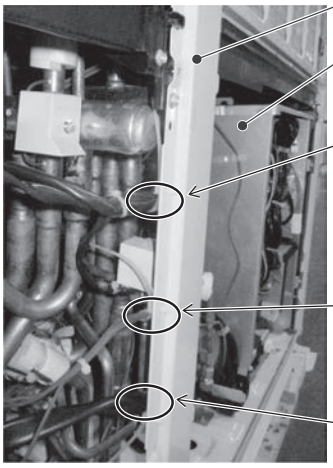

LEFT VIEW

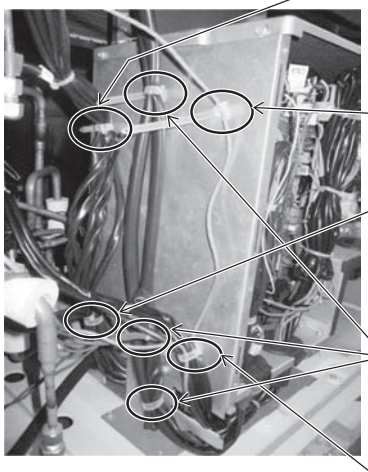

BOTTOM VIEW

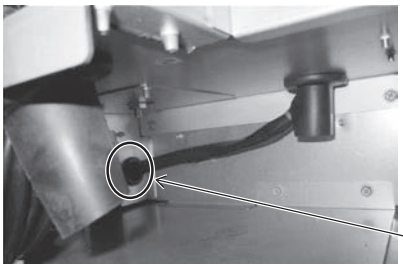

8-13-4 Four-way Valve Replacement Procedure <Type A>

1. S, L-module (Applicable to four-way valves 21S4a and 21S4b)

Explained below is the procedure for replacing four-way valve (21S4a) (on the left when seen from the front of the unit) and four-way valve (21S4b) (on the right when seen from the front of the unit).
Secure sufficient work space before starting maintenance work. (See 8-13-1 Ensuring Maintenance Space (Preparation for the Maintenance of Refrigerant Circuit Parts) <Type A/Type A1>.)

(1) Remove the top compressor cover by unscrewing the three screws. (See Figure 1.)
Remove the compressor cover by unhooking the hooks on the back.
(2) Remove the front compressor cover by unscrewing the four screws. (See Figure 2.)
(3) Cut the two cable ties holding TH4 and TH15, and remove the wiring from the rubber bush on the left compressor cover. (See Figure 3.)
(4) Remove the left compressor cover by unscrewing the two screws. (See Figure 4.)

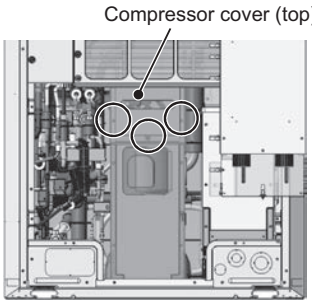

Figure 1

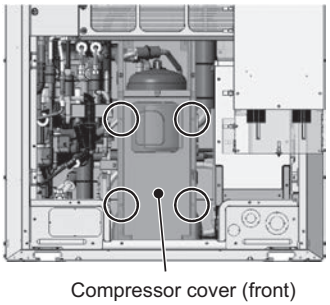

Figure 2

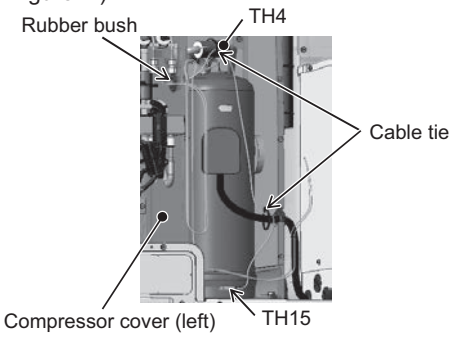

Figure 3

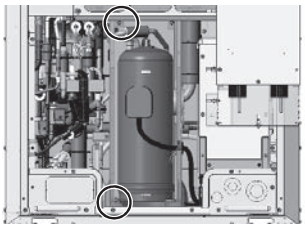
Figure 4

(5) Remove the coils, coil covers, pipe covers, and adjacent wiring of the four-way valve and LEV. (See Figures 5-1 through 5-3.)

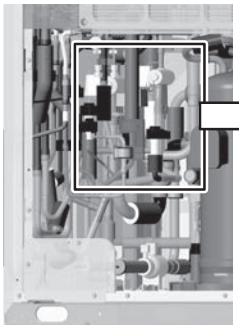
Figure 5-1

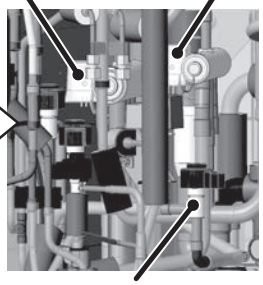

Figure 5-2

Figure 5-3

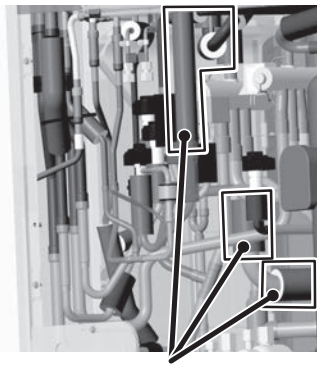
Remove the five pipe covers adjacent to the four-way valves.
*Save the pipe covers for later use.

(6) Cut the band on the pipe cover and the rubber spacer on the heat-exchanger side to remove them. (See Figure 6.)

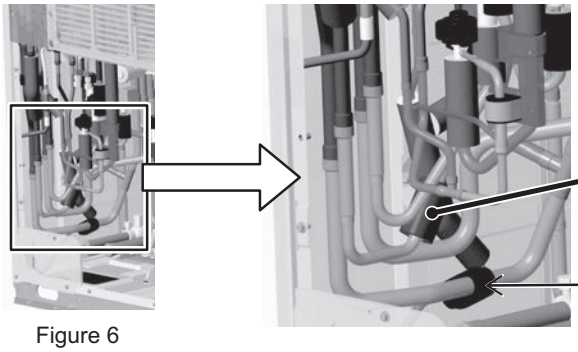
Figure 6

Remove the pipe cover adjacent to the brazed section of the heat exchanger.
*Save the pipe cover for later use.

Rubber spacer band

*Notes on replacing refrigerant circuit components (four-way valve, solenoid valve, and LEV)
- Be sure to perform non-oxidized brazing.
- Before heating the pipes, wrap the refrigerant circuit components with a wet towel to keep the temperature of the components from rising above 120°C.
- After brazing is done, check that the brazing is done properly and check for leaks before vacuum-drying the pipes.
- Direct the brazing torch flame away from the wiring and sheet metals inside the unit not to damage them.
- Wet felt sheets listed below (or its equivalent), and place them around the areas to be brazed to protect the heat exchanger, pipes, and pipe covers from being damaged from the brazing torch flame.
  Recommended felt sheets: Spatter felt 50CF-11 (5t x 1 m x 1 m) by TRUSCO Nakayama
  Felt sheets that meet the JIS standard (JIS A 1323 type A "Flame retardant testing method for spark droplets of welding and gas cutting on fabric sheets in construction works")

Replacement procedure for the four-way valve (21S4a)

(7A) Cut the pipe below four-way valve (21S4a) and in the middle with a pipe cutter as shown in the figure.
Cut the pipe below four-way valve (21S4a) and in the back with a pipe cutter as shown in the figure.
After cutting the pipe in three sections as indicated in the figure, remove the braze at the three areas shown in Figure 7.

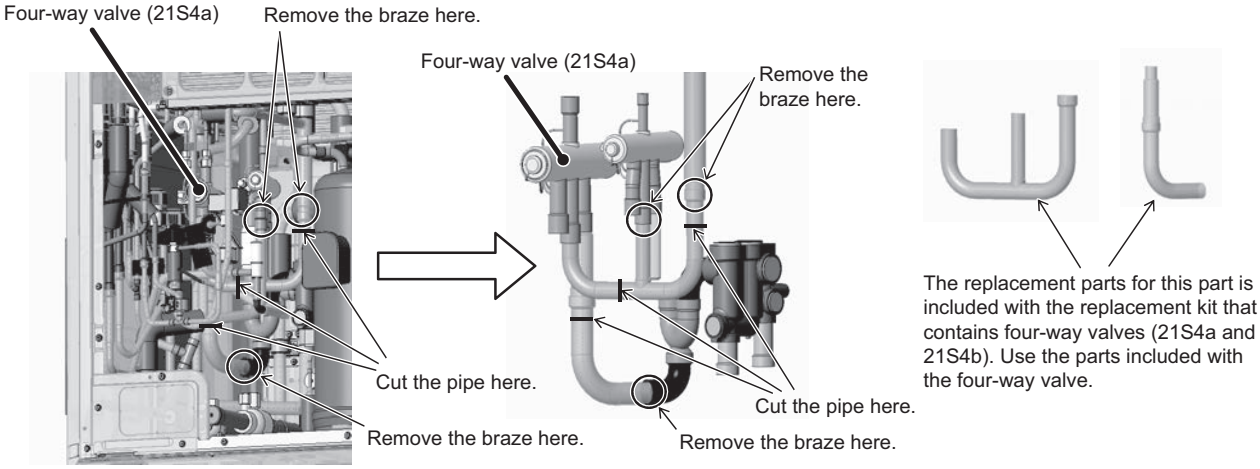

Figure 7

(8A) Remove the pipe below four-way valve (21S4a) and on the front by removing the braze at the three areas shown in Figure 8.

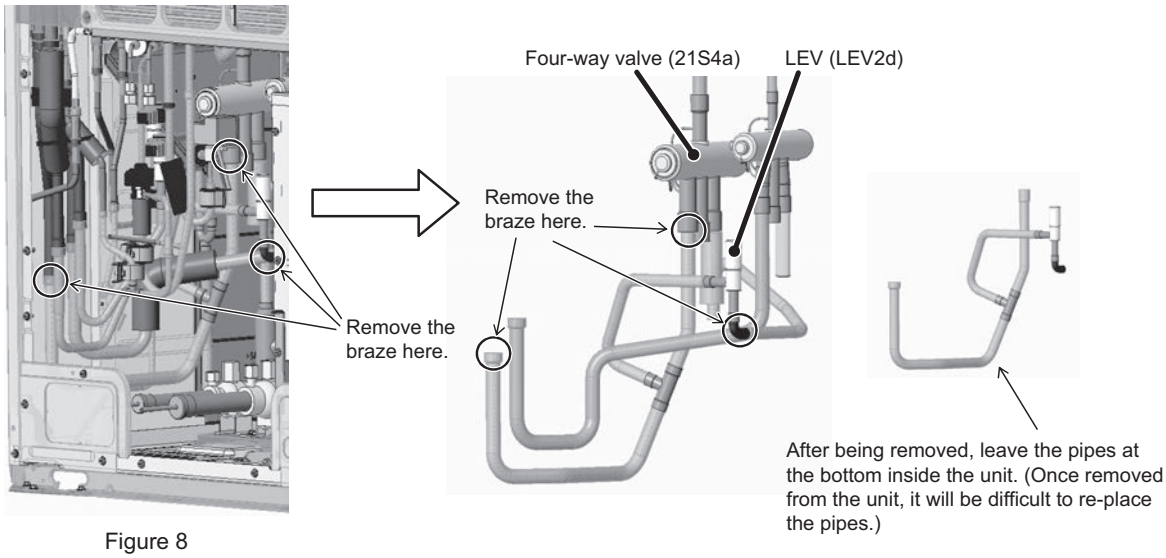

Figure 8

(9A) Remove four-way valve (21S4a) by removing the braze from the area above four-way valve (21S4a) as shown in Figure 9.

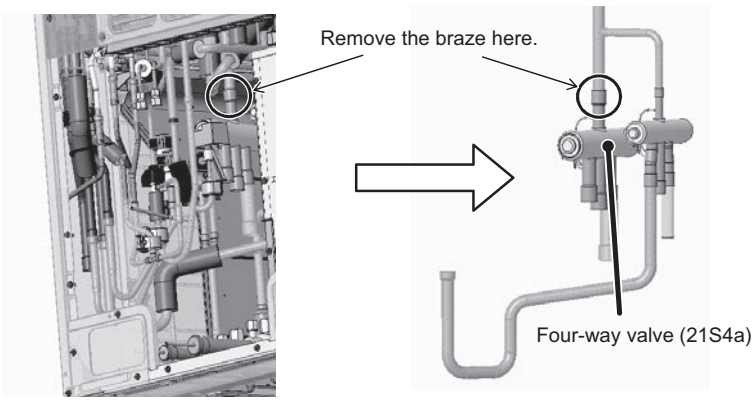

Figure 9

(10A) Mount a new four-way valve (21S4a). Figure 10 shows how to position a new four-way valve.

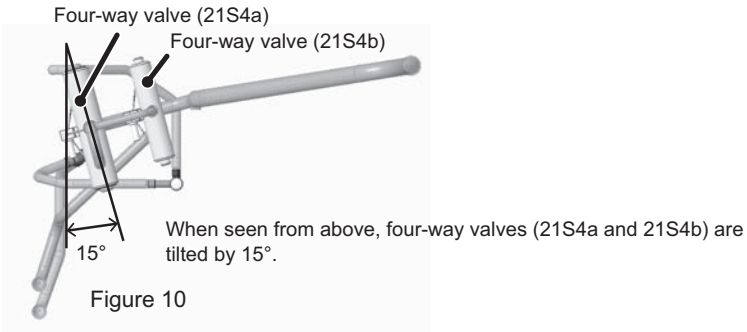

Figure 10

(11A) To make it easier to connect four-way valve (21S4a), cut the pipe end below the raised hole (cut off the section covered with brazing filler) on the pipe with a pipe cutter. Cut the pipe with an expanded end that is included with four-way valve (21S4a) to the same length as the pipe that was removed from the on-site pipe. (See Figure 11.)

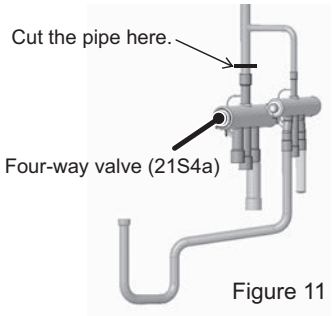

Figure 11

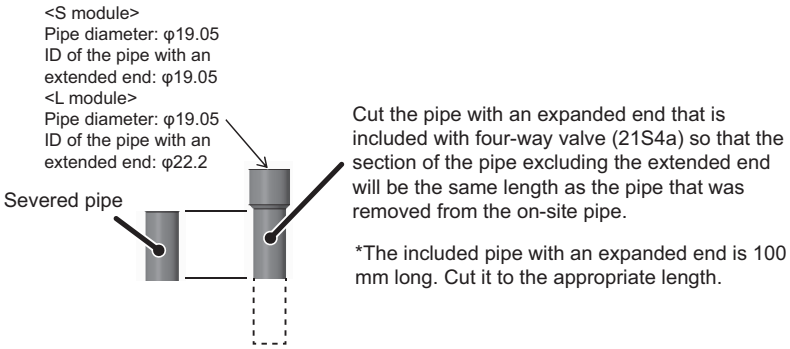

(12A) Mount four-way valve (21S4a) to the pipe below four-way valve (21S4a) and on the back. A total of four areas require brazing, including the area indicated in (11A) and the areas indicated in Figure 12.

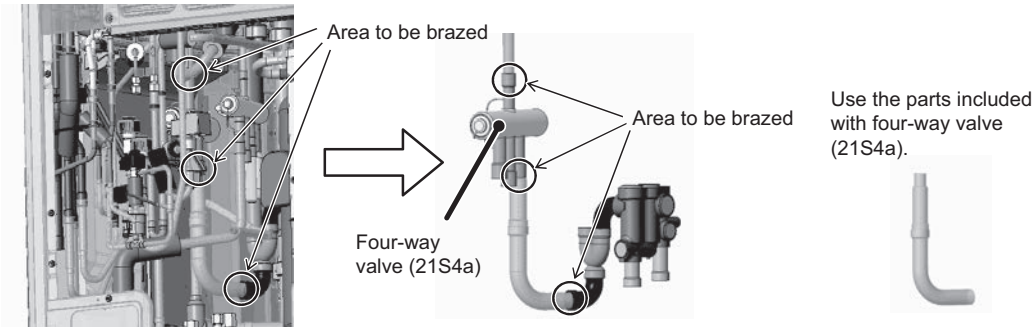

Figure 12

(13A) Install the pipe below four-way valve (21S4a) and in the middle by brazing at the three areas shown in Figure 13.

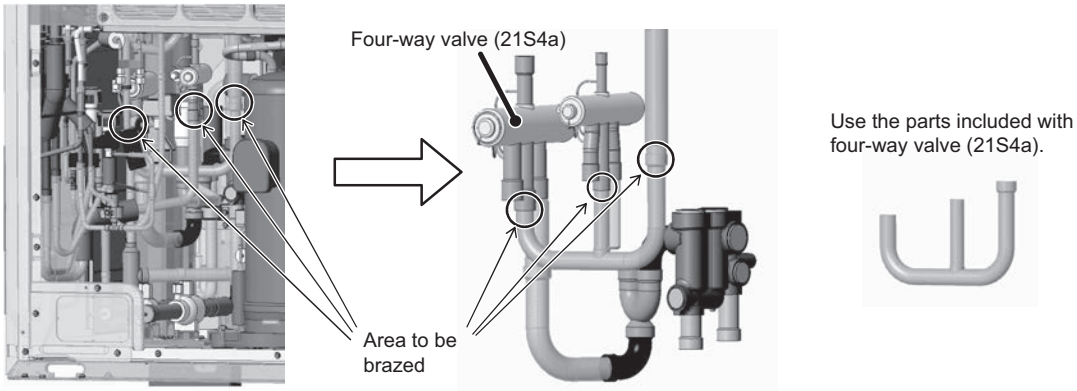

Figure 13

(14A) Install the pipe below four-way valve (21S4a) and on the front by brazing at the three areas shown in Figure 14.

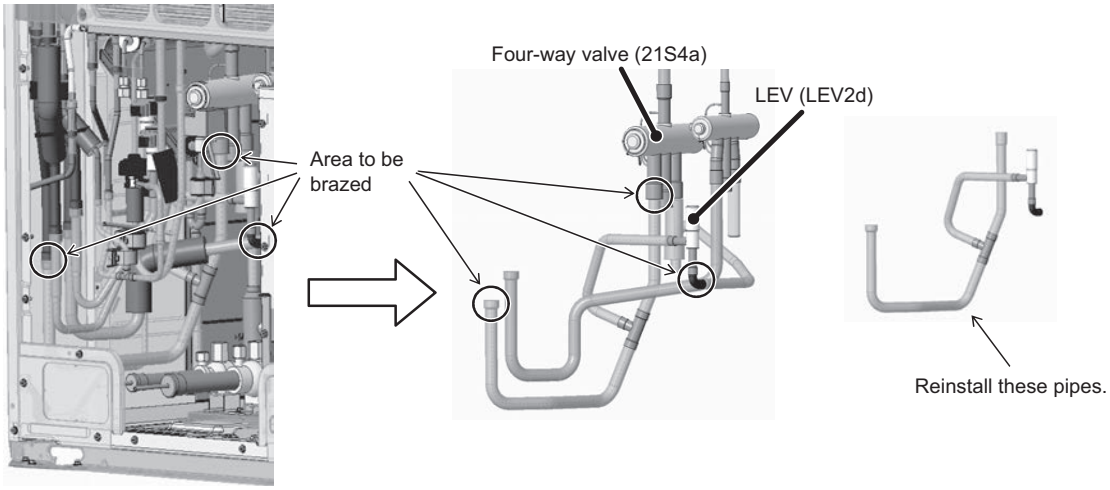

Figure 14

This step completes the replacement procedure for four-way valve (21S4a). Re-place the components that were removed as they were.

Replacement procedure for the four-way valve (21S4b)

(15B) Cut the pipe below four-way valve (21S4b) and in the middle with a pipe cutter as shown in the figure.
After cutting the pipe where indicated in the figure, remove the braze at the two areas shown in Figure 15.

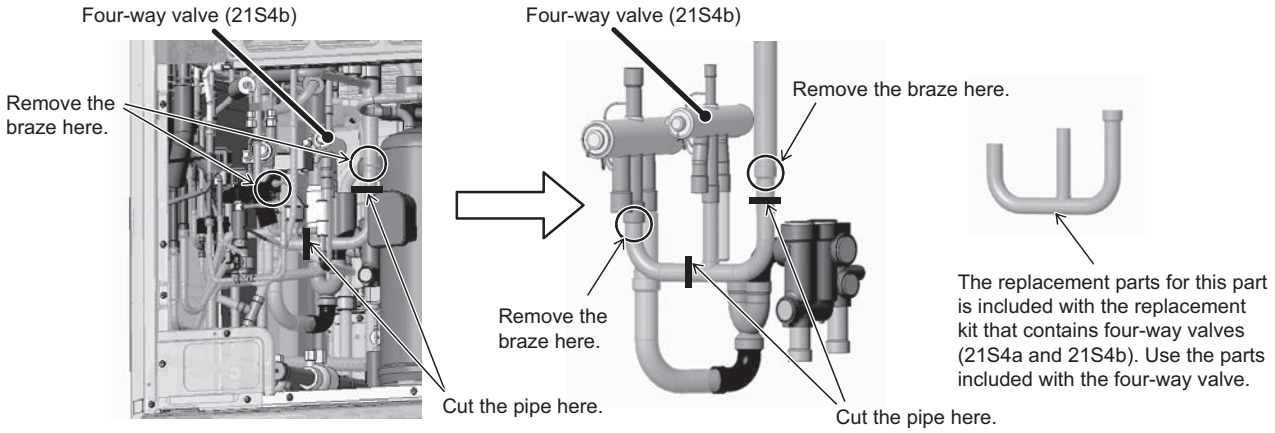

Figure 15

(16B) Remove the pipe below four-way valve (21S4b) and on the front by removing the braze at the two areas shown in Figure 16.

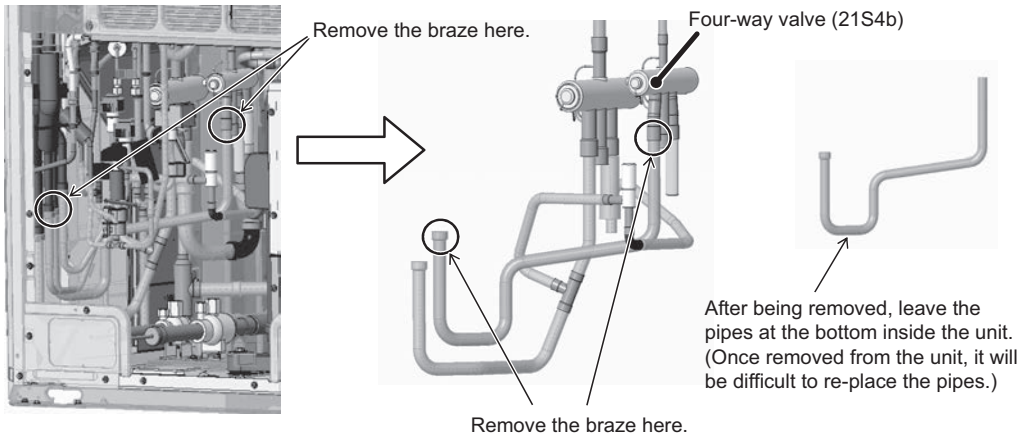

Figure 16

(17B) Remove four-way valve (21S4b) by removing the braze from the area above four-way valve (21S4b) as shown in Figure 17.

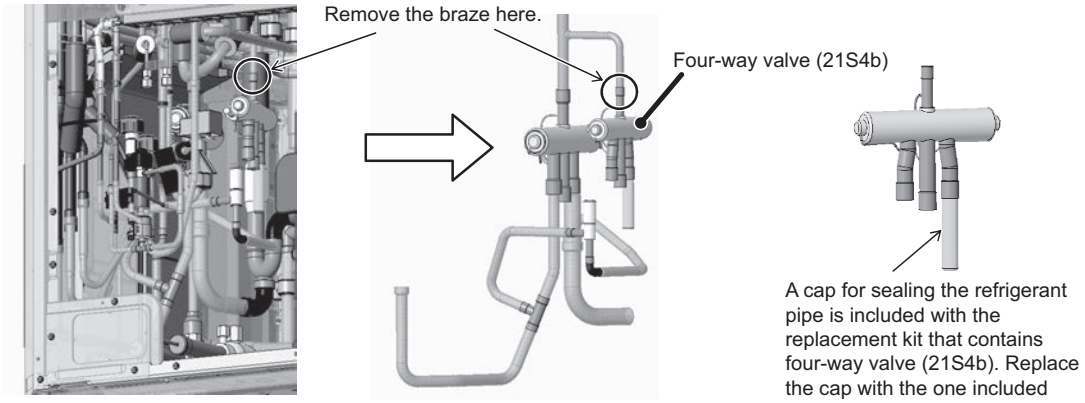

Figure 17

(18B) To make it easier to connect four-way valve (21S4b), cut the pipe between the section above four-way valve (21S4b) and the pipe bend with a pipe cutter. Cut the pipe with an expanded end that is included with four-way valve (21S4b) to the same length as the pipe that was removed from the on-site pipe. (See Figure 18.)

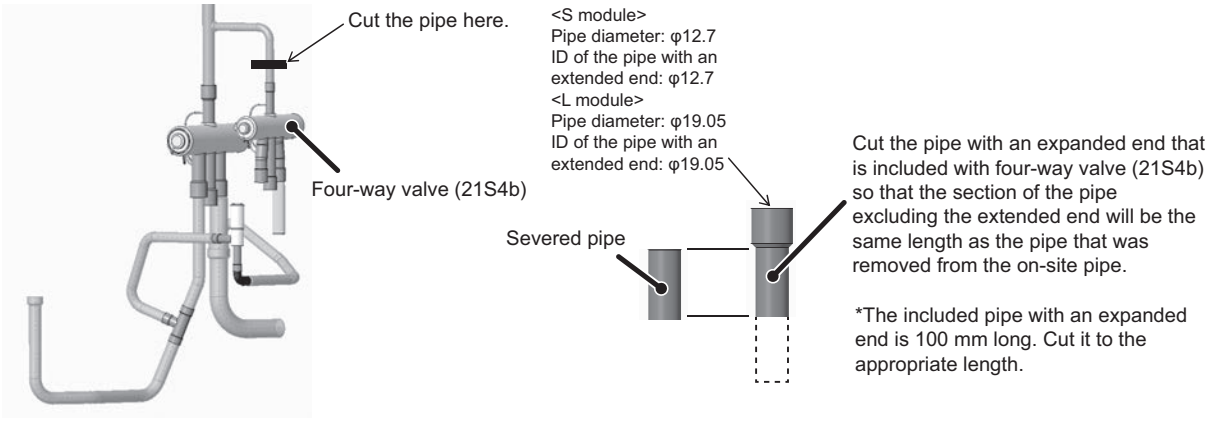

Figure 18

(19B) Mount four-way valve (21S4b) to the pipe below four-way valve (21S4b) and in the middle. A total of five areas require brazing, including the area indicated in (18B) and the areas indicated in Figure 19. Mount four-way valve (21S4b) horizontal to four-way valve (21S4a) as shown in (10A).

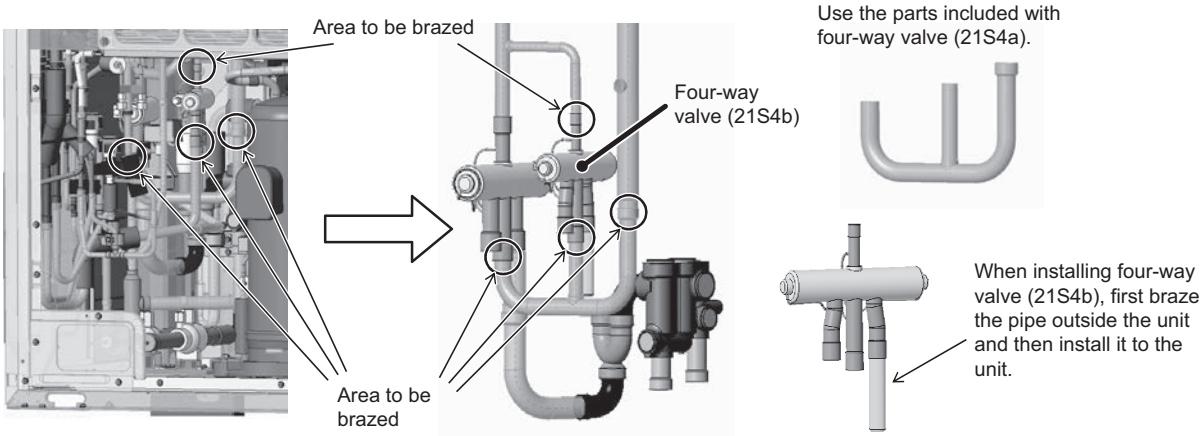

Figure 19

(20B) Install the pipe below four-way valve (21S4b) and on the front by brazing at the two areas shown in Figure 20.

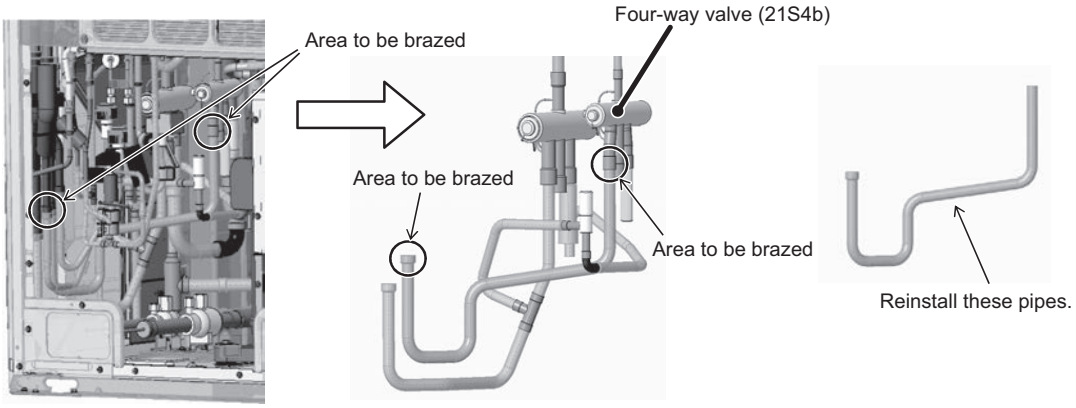

Figure 20

This step completes the replacement procedure for four-way valve (21S4b). Re-place the components that were removed as they were.

2. XL-module (four-way valve (21S4a, 21S4b, and 21S4c))

Explained below is the procedure for replacing four-way valve (21S4a) (on the left when seen from the front of the unit), four-way valve (21S4b) (in the middle when seen from the front of the unit), and four-way valve (21S4c) (on the right when seen from the front of the unit). (See Figure 1.)

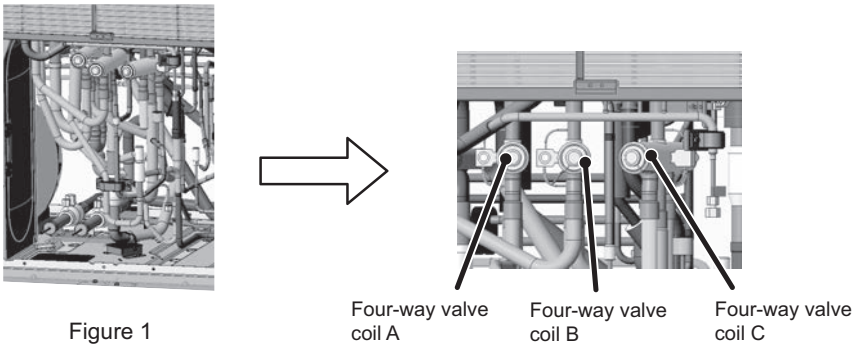

Figure 1

(1) Remove the pipe covers, wirings, and sheet metals. (See Figure 2.)

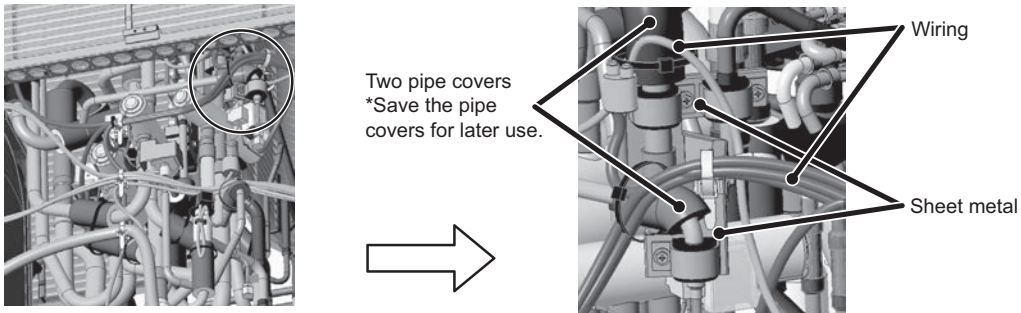

Figure 2

(2) Remove the coils from four-way valves (21S4a, 21A4b, and 21S4c), solenoid valve (SV2), coil cover, and wiring. (See Figure 3.)

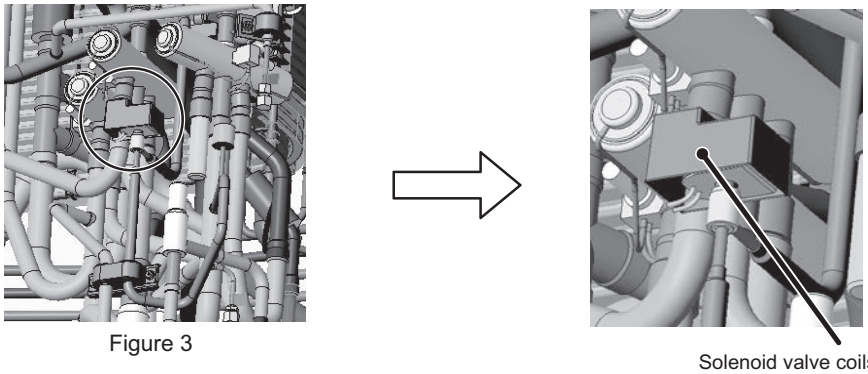

Figure 3

(3) Remove the pipe cover adjacent to four-way valves. (See Figure 4.)
*Save the pipe covers for later use.

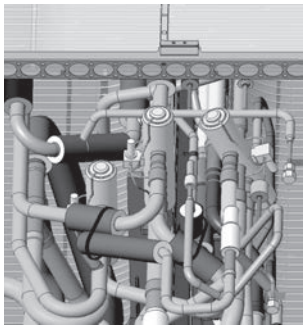

Figure 4

*Notes on replacing refrigerant circuit components (four-way valve, solenoid valve, and LEV)
- Be sure to perform non-oxidized brazing.
- Before heating the pipes, wrap the refrigerant circuit components with a wet towel to keep the temperature of the components from rising above 120°C.
- After brazing is done, check that the brazing is done properly and check for leaks before vacuum-drying the pipes.
- Direct the brazing torch flame away from the wiring and sheet metals inside the unit not to damage them.
- Wet felt sheets listed below (or its equivalent), and place them around the areas to be brazed to protect the heat exchanger, pipes, and pipe covers from being damaged from the brazing torch flame.
  Recommended felt sheets: Spatter felt 50CF-11 (5t x 1 m x 1 m) by TRUSCO Nakayama
  Felt sheets that meet the JIS standard (JIS A 1323 type A "Flame retardant testing method for spark droplets of welding and gas cutting on fabric sheets in construction works")

(4) Remove the braze from the pipe on the left side of four-way valve (21S4a) and between four-way valves (21S4b and 21S4c). (See Figure 5.)

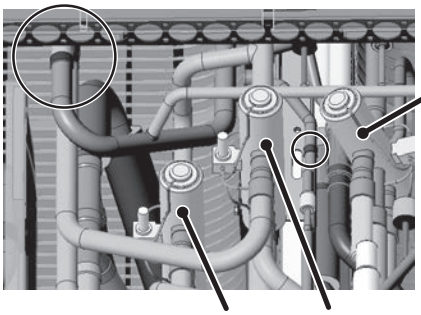

Figure 5

Replacement procedure for the four-way valve (21S4a)
(5A) Install a flame-protection plate. (See Figure 6.)

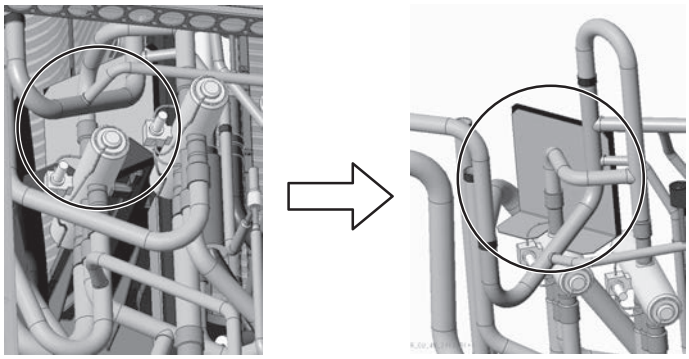

Figure 6

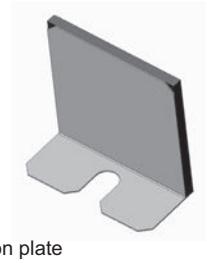

Flame-protection plate
*The replacement parts for this part is included with the replacement kit that contains four-way valve (21S4a). Remove the plate after replacing four-way valve (21S4a).

(6A) Remove the braze from the area above four-way valve (21S4a) as shown in Figure 7.

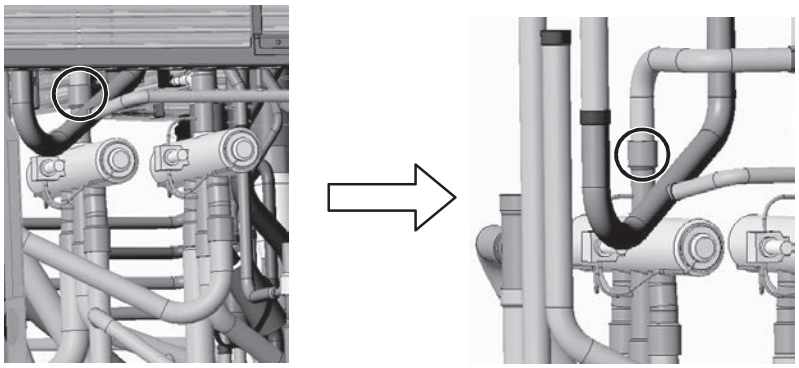

Figure 7

(7A) Remove the braze from the three areas below four-way valve (21S4a) as shown in Figure 8.

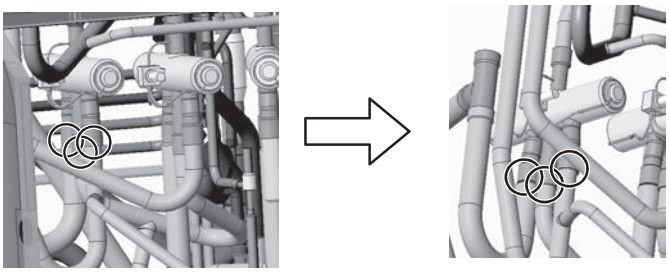

Figure 8

(8A) Mount a new four-way valve (21S4a).

Replacement procedure for the four-way valve (21S4b)
(9B) Follow the steps (6A) through (7A).

(10B) Mount a new four-way valve (21S4b).

Replacement procedure for the four-way valve (21S4c)
(11C) Remove the braze from the area above four-way valve (21S4c) as shown in Figure 9.

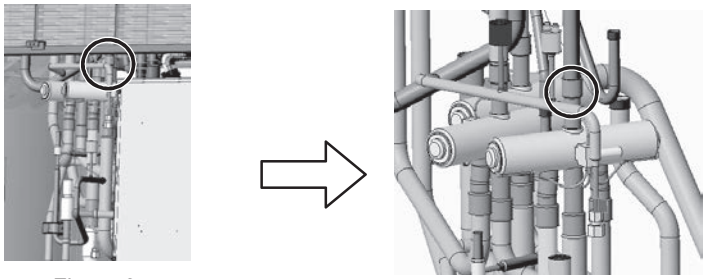

Figure 9

(12C) Remove the braze from the two areas below four-way valve (21S4c) as shown in Figure 10.

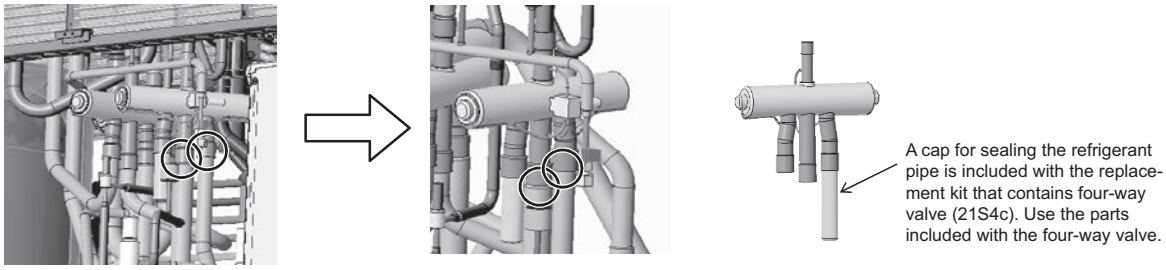

Figure 10

(13C) Mount a new four-way valve (21S4c). Figure 11 shows how to position a new four-way valve.

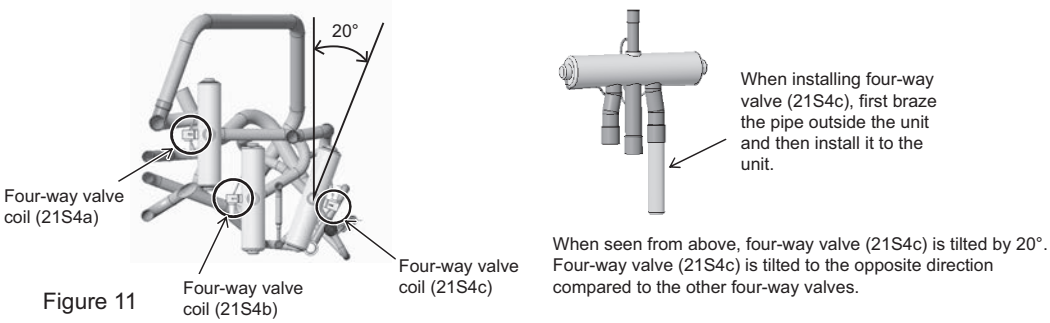

Figure 11

3. EXL-module (four-way valve (21S4a and 21S4b))

Explained below is the procedure for replacing four-way valve 21S4a (on the left when seen from the front of the unit) and four-way valve 21S4b (on the right when seen from the front of the unit). (See Figure 1.)

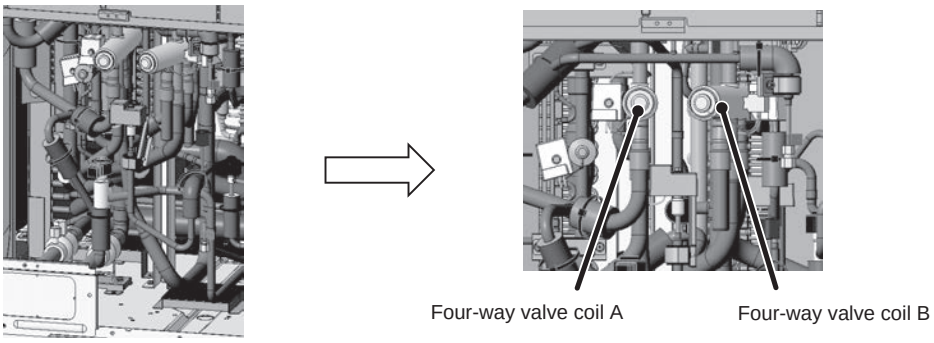

Figure 1

(1) Remove the three pipe covers, wirings, and sheet metals. (See Figure 2.)

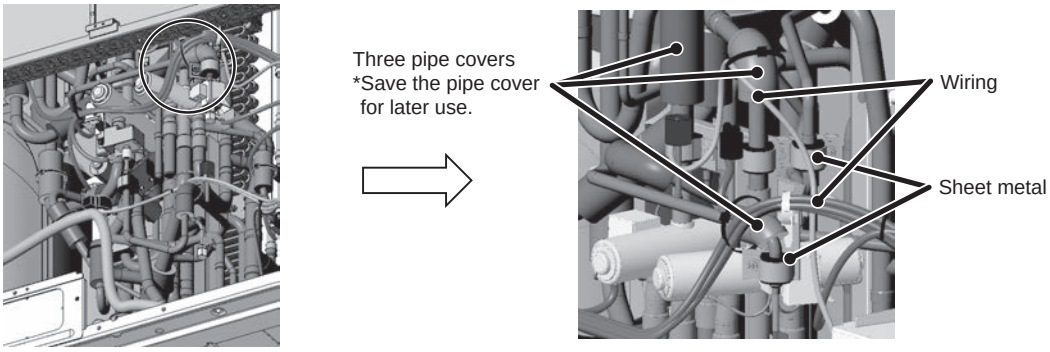

Figure 2

(2) Remove the coils (four-way valves (21S4a and 21S4b) and solenoid valve (SV2)), coil cover, wiring, and sheet metal. (See Figure 3.)

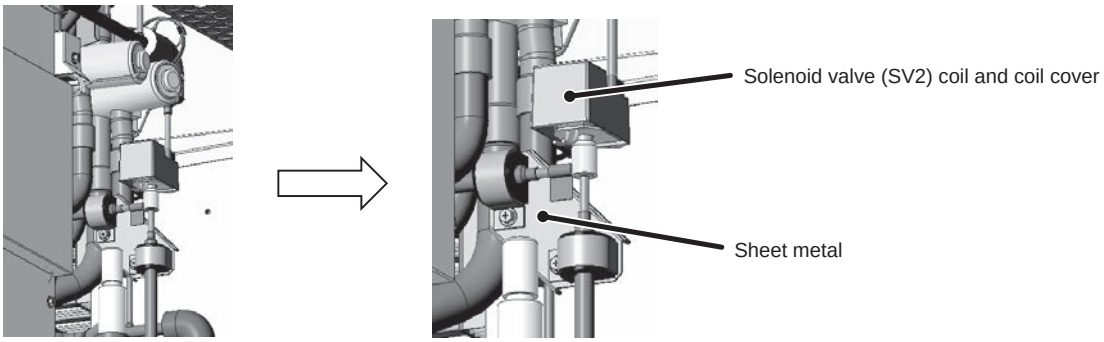

Figure 3

(3) Remove the sheet metals and the pipe covers adjacent to the four-way valves. (See Figure 4.)
*Save the pipe cover for later use.

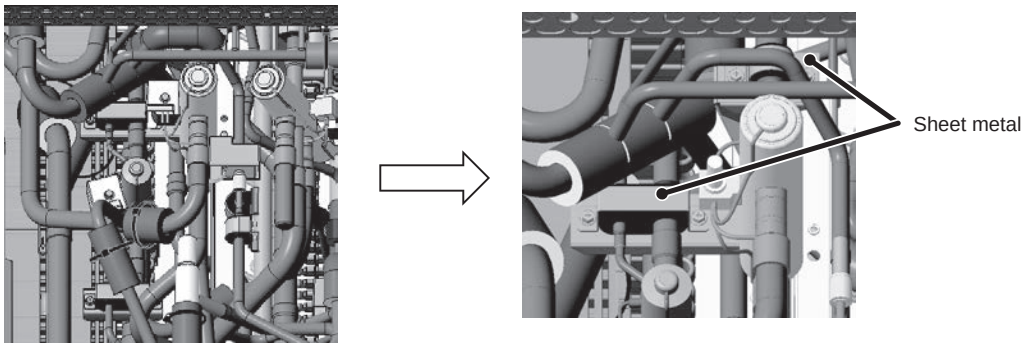

Figure 4

*Notes on replacing refrigerant circuit components (four-way valve, solenoid valve, and LEV)
- Be sure to perform non-oxidized brazing.
- Before heating the pipes, wrap the refrigerant circuit components with a wet towel to keep the temperature of the components from rising above 120°C.
- After brazing is done, check that the brazing is done properly and check for leaks before vacuum-drying the pipes.
- Direct the brazing torch flame away from the wiring and sheet metals inside the unit not to damage them.
- Wet felt sheets listed below (or its equivalent), and place them around the areas to be brazed to protect the heat exchanger, pipes, and pipe covers from being damaged from the brazing torch flame.
  Recommended felt sheets: Spatter felt 50CF-11 (5t x 1 m x 1 m) by TRUSCO Nakayama
  Felt sheets that meet the JIS standard (JIS A 1323 type A "Flame retardant testing method for spark droplets of welding and gas cutting on fabric sheets in construction works")

(4) Remove the braze from the left side of four-way valve (21S4a) and from the pipe between four-way valves (21S4a and 21S4b). (See Figure 5.)

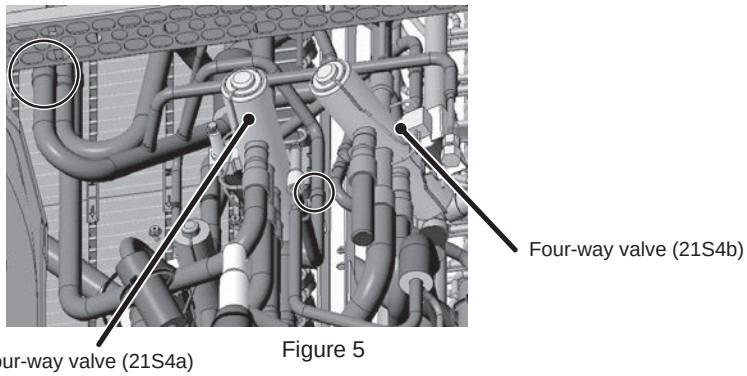

Figure 5

Replacement procedure for four-way valve (21S4a)
(5) Remove the braze from the area above four-way valve (21S4a). (See Figure 6.)

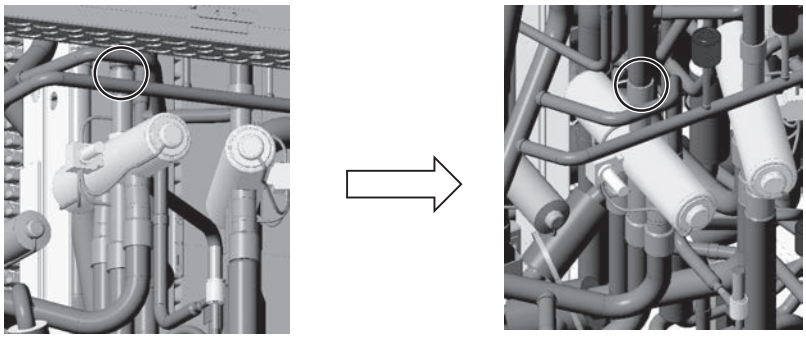

Figure 6

(6) Remove the braze from the three areas below four-way valve (21S4a). (See Figure 7.)

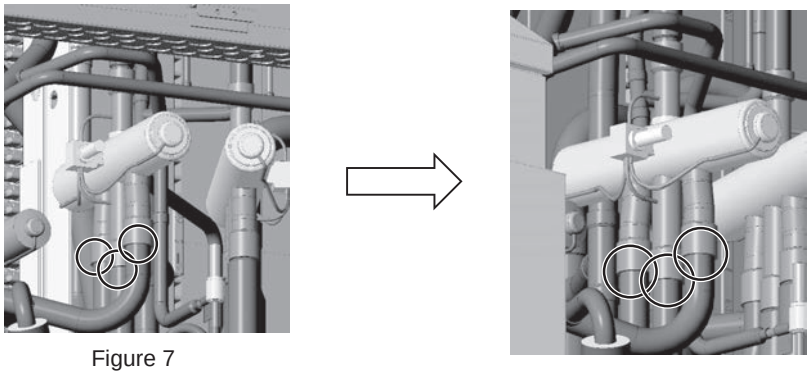

Figure 7

(7) Mount a new four-way valve (21S4a).

Replacement procedure for four-way valve (21S4b)
(8) Follow the steps (5) and (6).

(9) Mount a new four-way valve (21S4b). Figure 8 shows how to position a new four-way valve.
When seen from above, four-way valve (21S4b) is tilted by 20° with respect to the vertical plane.
Coils on four-way valves 21S4a and 21S4b face different directions.

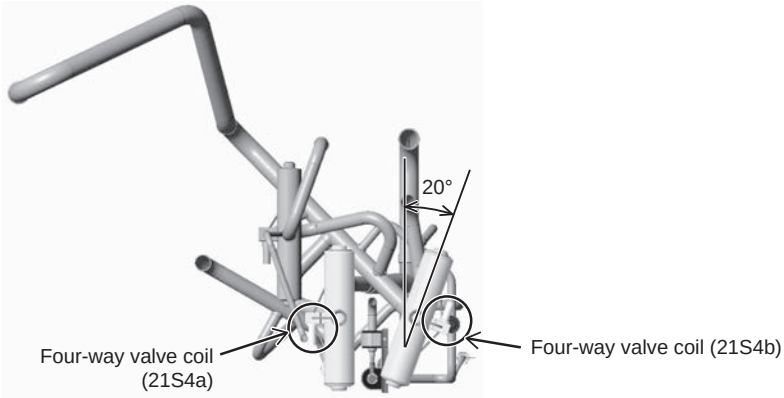

Figure 8

8-13-5 Four-way Valve Replacement Procedure <Type A1>

1. S, L-module (Applicable to four-way valves 21S4a and 21S4b)

Explained below is the procedure for replacing four-way valve (21S4a) (on the left when seen from the front of the unit) and four-way valve (21S4b) (on the right when seen from the front of the unit).
Secure sufficient work space before starting maintenance work. (See 8-13-1 Ensuring Maintenance Space (Preparation for the Maintenance of Refrigerant Circuit Parts) <Type A/Type A1>.)

(1) Remove the top compressor cover by unscrewing the three screws. (See Figure 1.)
Remove the compressor cover by unhooking the hooks on the back.
(2) Remove the front compressor cover by unscrewing the four screws. (See Figure 2.)
(3-1) Cut the two cable ties holding TH4 and TH15, and remove the wiring from the rubber bush on the left compressor cover for TH4, TH15 and the crankcase heater (CH11). (See Figure 3-1.) (P72, 96, 120, and 144 only.)
(3-2) Cut the three cable ties holding TH4, TH15 and Crankcase heater (CH11), and remove the wiring from the rubber bush on the left compressor cover. (See Figure 3-2.) (EP72, 96, 120, and 144 only.)
(4) Remove the left compressor cover by unscrewing the two screws. (See Figure 4.)

Figure 1

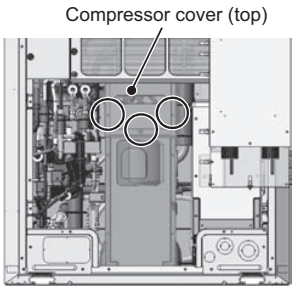

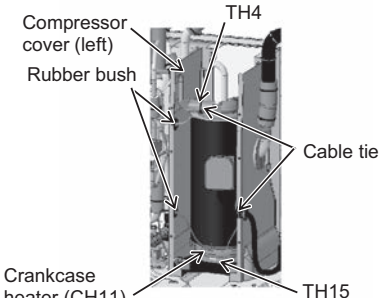

Figure 3-1

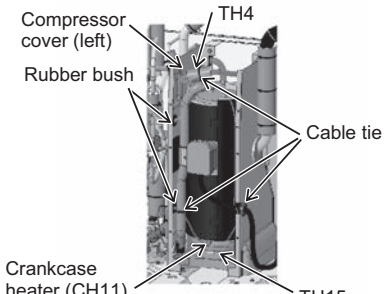

Figure 3-2

Figure 2

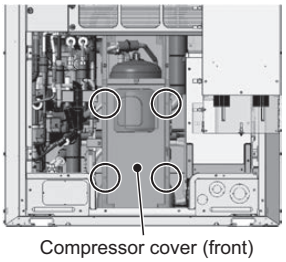

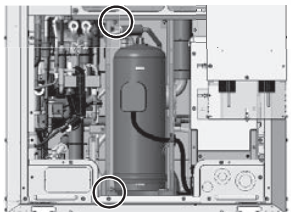

Figure 4

(5) Remove the coils, coil covers, pipe covers, and adjacent wiring of the four-way valve and LEV. (See Figures 5-1 through 5-3.)

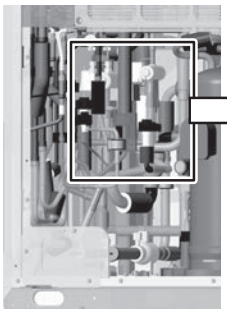

Figure 5-1

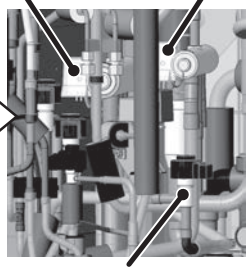

Figure 5-2

Figure 5-3

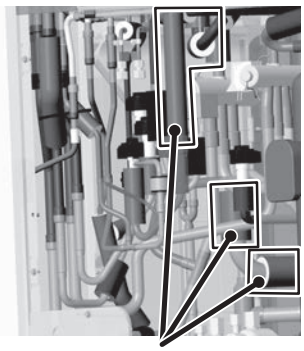

(6) Cut the band on the pipe cover and the rubber spacer on the heat-exchanger side to remove them. (See Figure 6.)

Figure 6

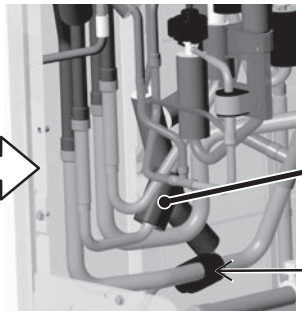

*Notes on replacing refrigerant circuit components (four-way valve, solenoid valve, and LEV)
- Be sure to perform non-oxidized brazing.
- Before heating the pipes, wrap the refrigerant circuit components with a wet towel to keep the temperature of the components from rising above 120°C.
- After brazing is done, check that the brazing is done properly and check for leaks before vacuum-drying the pipes.
- Direct the brazing torch flame away from the wiring and sheet metals inside the unit not to damage them.
- Wet felt sheets listed below (or its equivalent), and place them around the areas to be brazed to protect the heat exchanger, pipes, and pipe covers from being damaged from the brazing torch flame.
  Recommended felt sheets: Spatter felt 50CF-11 (5t x 1 m x 1 m) by TRUSCO Nakayama
  Felt sheets that meet the JIS standard (JIS A 1323 type A "Flame retardant testing method for spark droplets of welding and gas cutting on fabric sheets in construction works")

Replacement procedure for the four-way valve (21S4a)

(7A) Cut the pipe below four-way valve (21S4a) and in the middle with a pipe cutter as shown in the figure.
Cut the pipe below four-way valve (21S4a) and in the back with a pipe cutter as shown in the figure.
After cutting the pipe in three sections as indicated in the figure, remove the braze at the three areas shown in Figure 7.

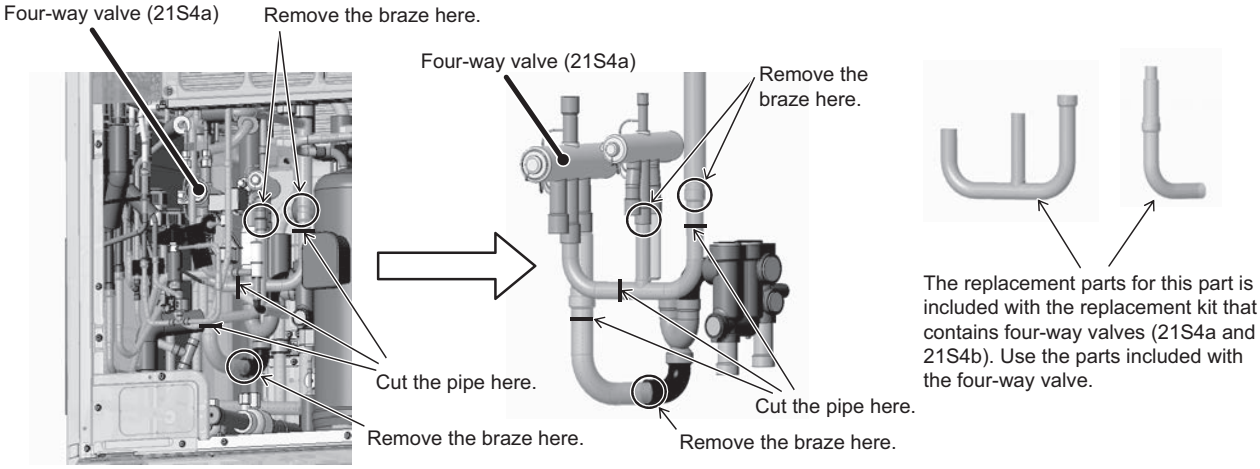

Figure 7

(8A) Remove the pipe below four-way valve (21S4a) and on the front by removing the braze at the three areas shown in Figure 8.

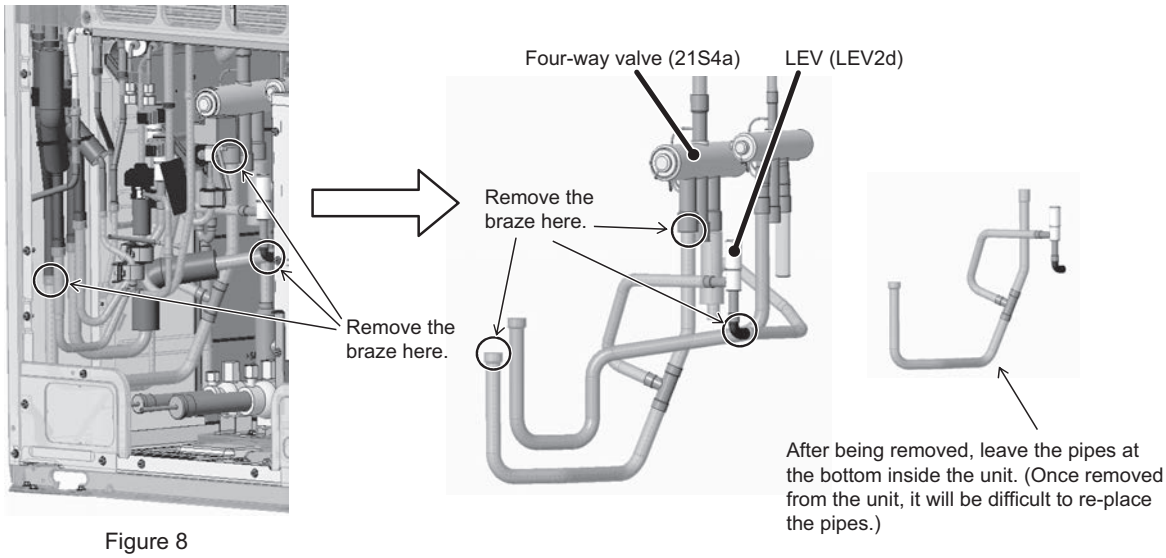

Figure 8

(9A) Remove four-way valve (21S4a) by removing the braze from the area above four-way valve (21S4a) as shown in Figure 9.

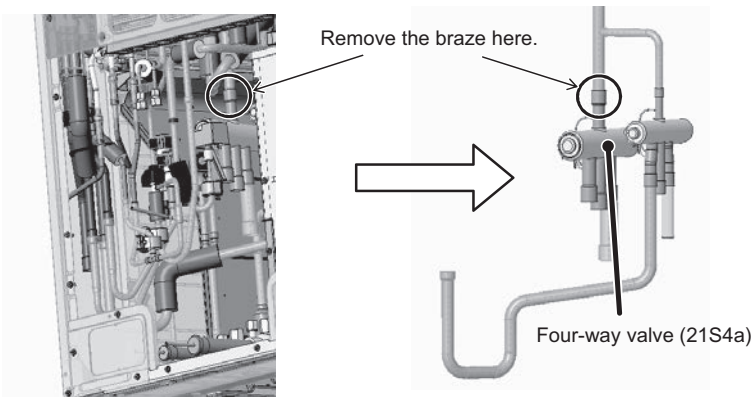

Figure 9

(10A) Mount a new four-way valve (21S4a). Figure 10 shows how to position a new four-way valve.

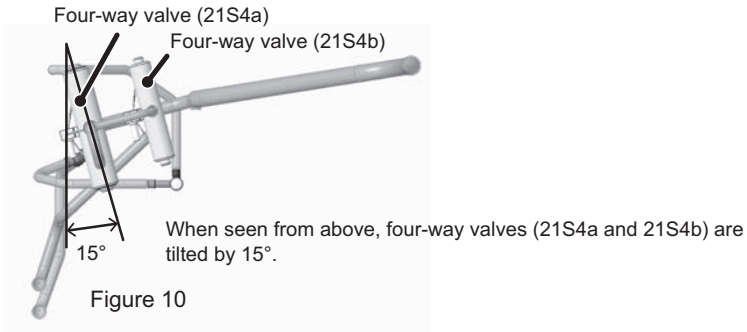

Figure 10

(11A) To make it easier to connect four-way valve (21S4a), cut the pipe end below the raised hole (cut off the section covered with brazing filler) on the pipe with a pipe cutter. Cut the pipe with an expanded end that is included with four-way valve (21S4a) to the same length as the pipe that was removed from the on-site pipe. (See Figure 11.)

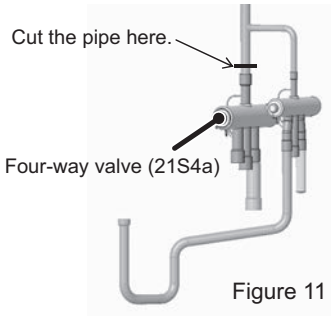

Figure 11

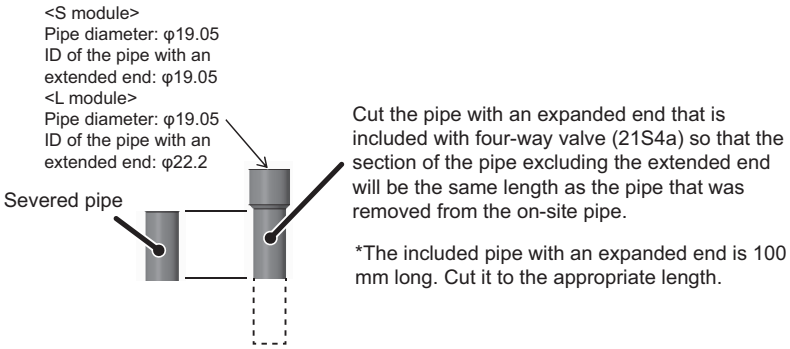

(12A) Mount four-way valve (21S4a) to the pipe below four-way valve (21S4a) and on the back. A total of four areas require brazing, including the area indicated in (11A) and the areas indicated in Figure 12.

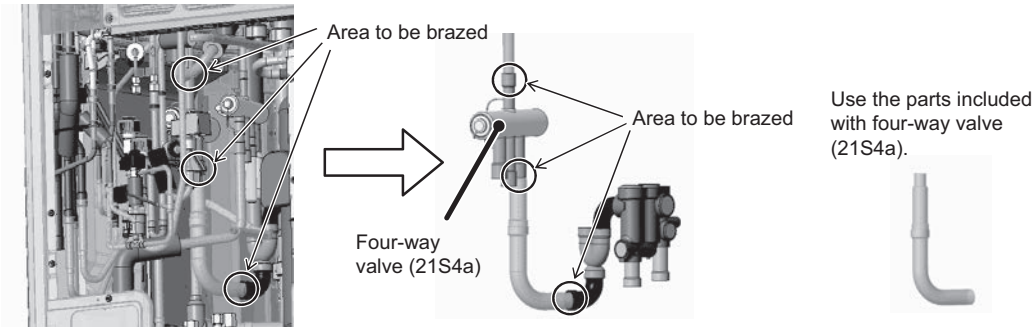

Figure 12

(13A) Install the pipe below four-way valve (21S4a) and in the middle by brazing at the three areas shown in Figure 13.

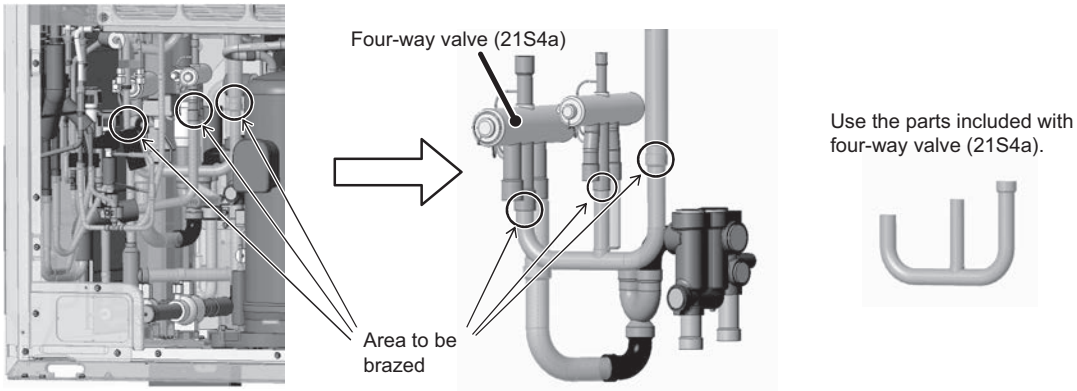

Figure 13

(14A) Install the pipe below four-way valve (21S4a) and on the front by brazing at the three areas shown in Figure 14.

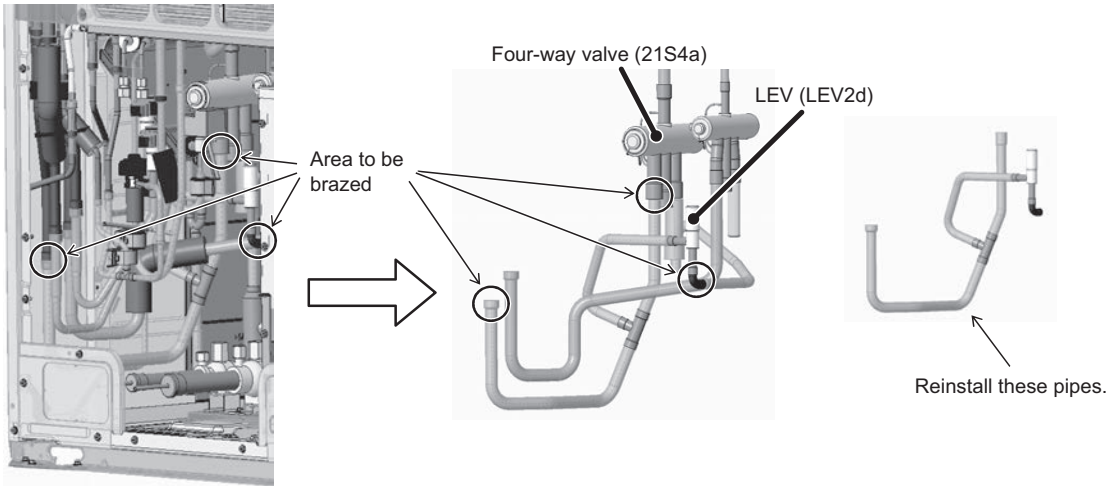

Figure 14

This step completes the replacement procedure for four-way valve (21S4a). Re-place the components that were removed as they were.

Replacement procedure for the four-way valve (21S4b)

(15B) Cut the pipe below four-way valve (21S4b) and in the middle with a pipe cutter as shown in the figure.
After cutting the pipe where indicated in the figure, remove the braze at the two areas shown in Figure 15.

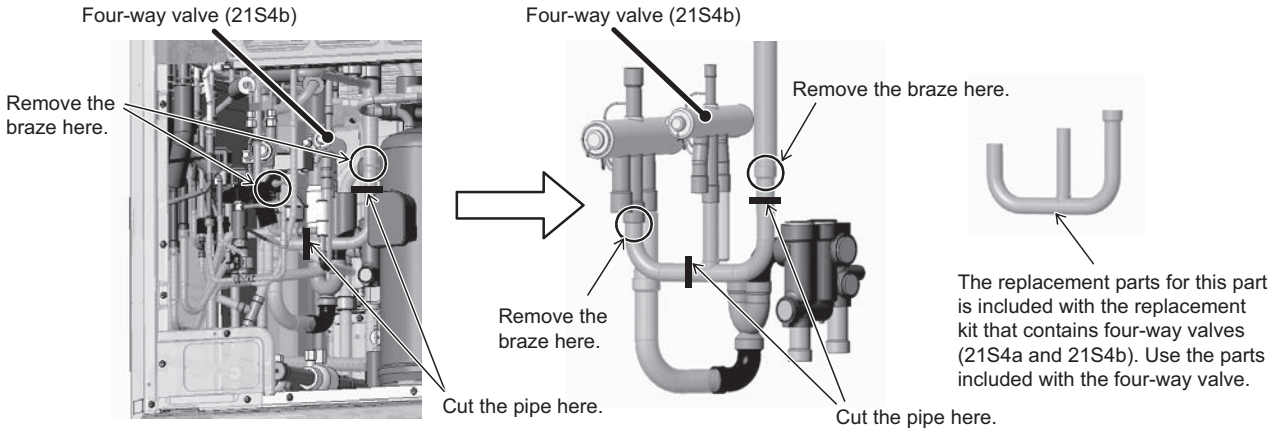

Figure 15

(16B) Remove the pipe below four-way valve (21S4b) and on the front by removing the braze at the two areas shown in Figure 16.

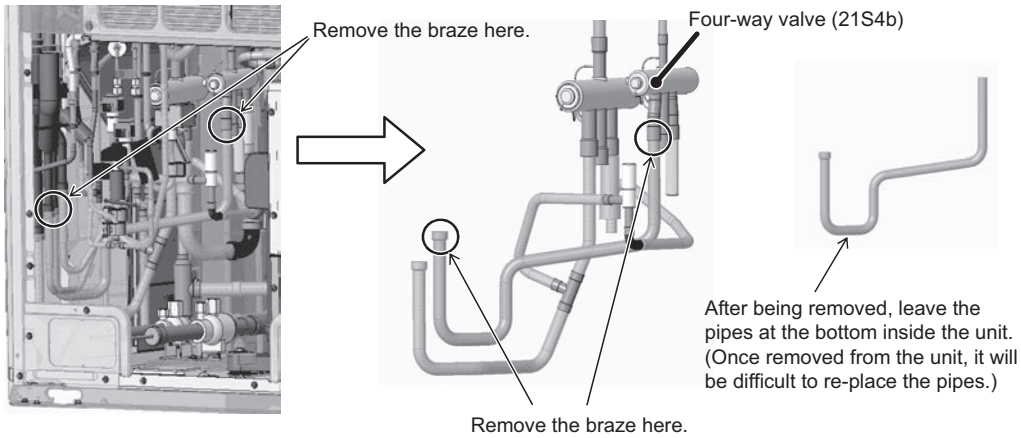

Figure 16

(17B) Remove four-way valve (21S4b) by removing the braze from the area above four-way valve (21S4b) as shown in Figure 17.

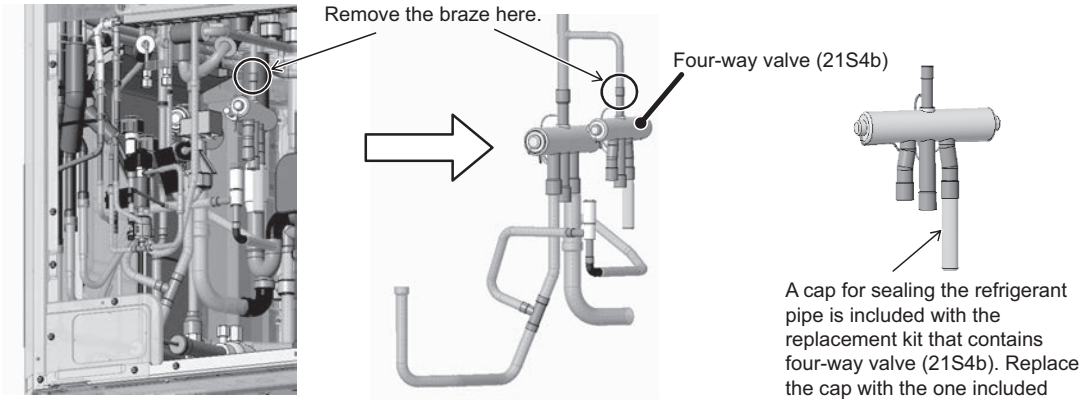

Figure 17

(18B) To make it easier to connect four-way valve (21S4b), cut the pipe between the section above four-way valve (21S4b) and the pipe bend with a pipe cutter. Cut the pipe with an expanded end that is included with four-way valve (21S4b) to the same length as the pipe that was removed from the on-site pipe. (See Figure 18.)

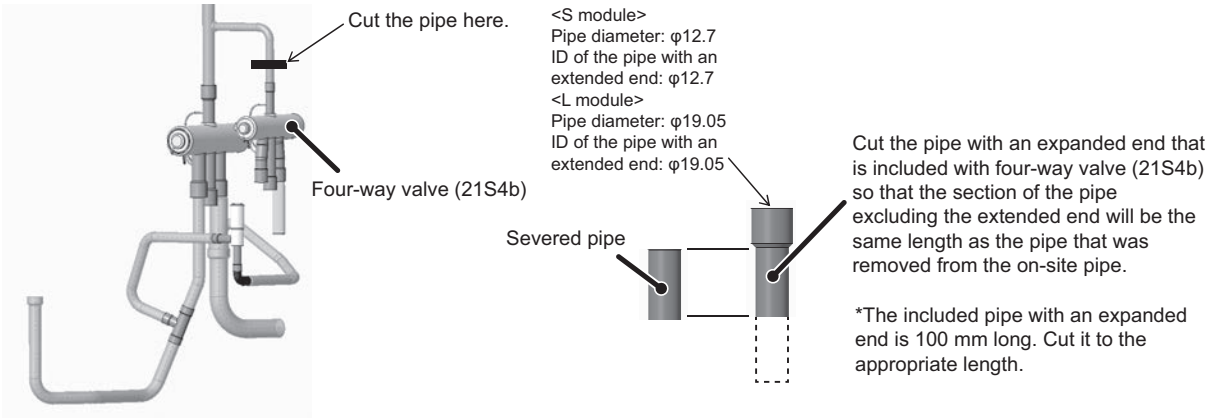

Figure 18

(19B) Mount four-way valve (21S4b) to the pipe below four-way valve (21S4b) and in the middle. A total of five areas require brazing, including the area indicated in (18B) and the areas indicated in Figure 19. Mount four-way valve (21S4b) horizontal to four-way valve (21S4a) as shown in (10A).

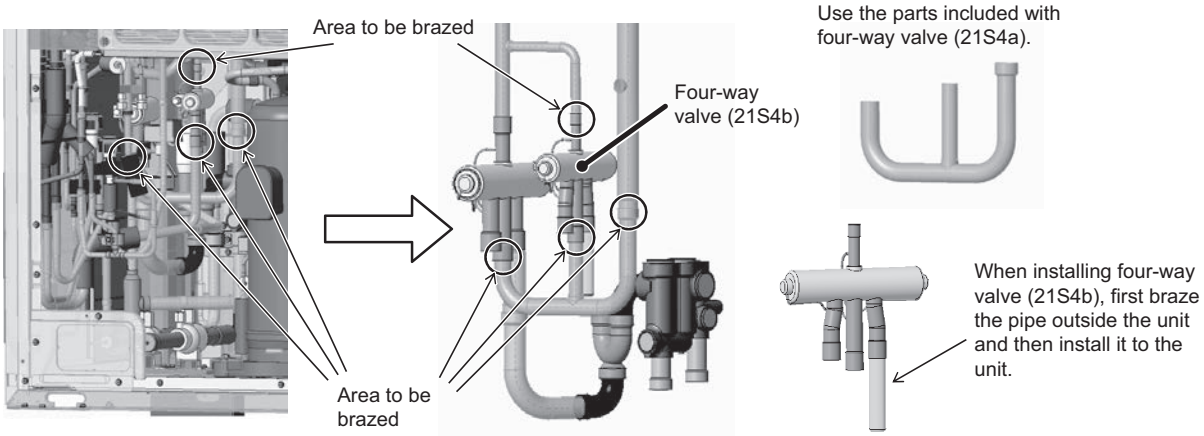

Figure 19

(20B) Install the pipe below four-way valve (21S4b) and on the front by brazing at the two areas shown in Figure 20.

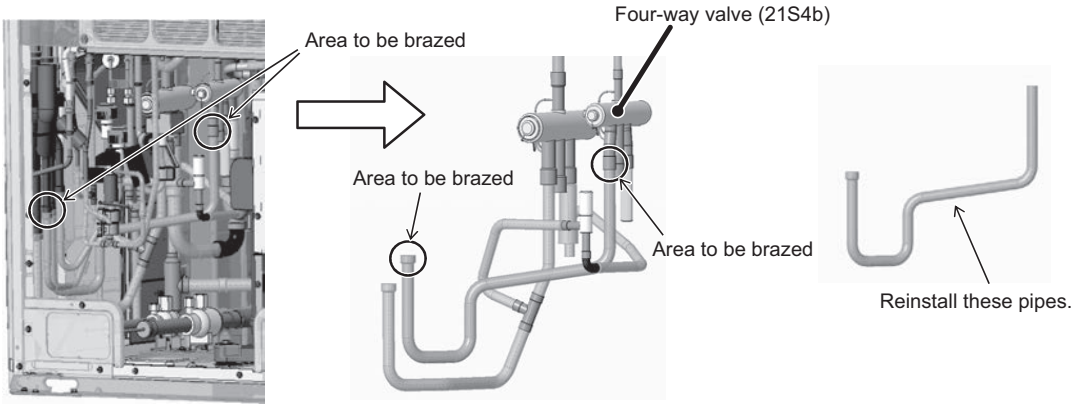

Figure 20

This step completes the replacement procedure for four-way valve (21S4b). Re-place the components that were removed as they were.

2. XL-module (four-way valve (21S4a, 21S4b, and 21S4c))

Explained below is the procedure for replacing four-way valve (21S4a) (on the left when seen from the front of the unit), four-way valve (21S4b) (in the middle when seen from the front of the unit), and four-way valve (21S4c) (on the right when seen from the front of the unit). (See Figure 1.)

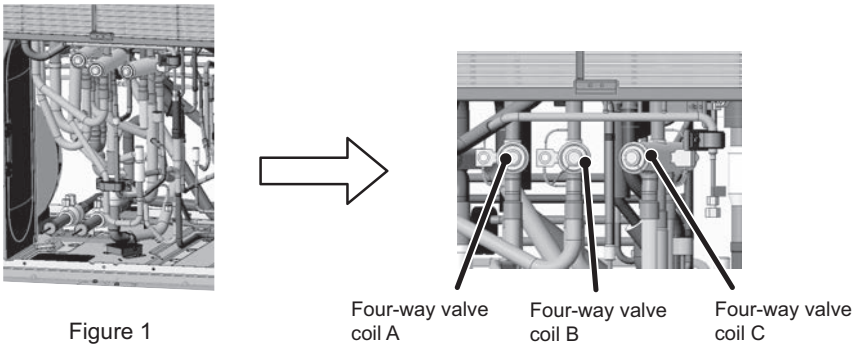

Figure 1

(1) Remove the pipe covers, wirings, and sheet metals. (See Figure 2.)

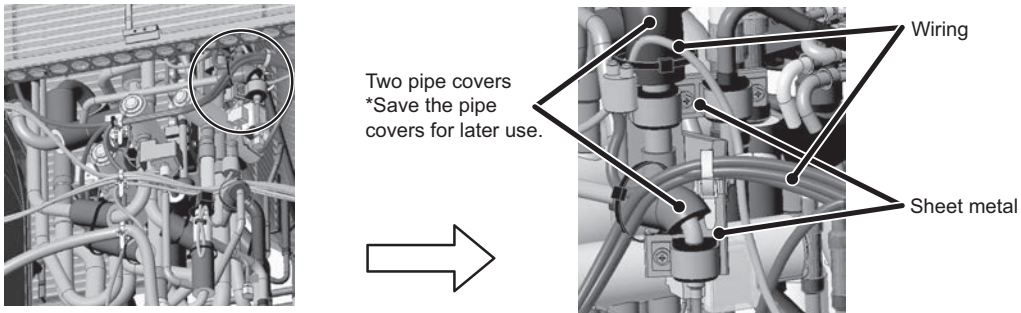

Figure 2

(2) Remove the coils from four-way valves (21S4a, 21A4b, and 21S4c), solenoid valve (SV2), coil cover, and wiring. (See Figure 3.)

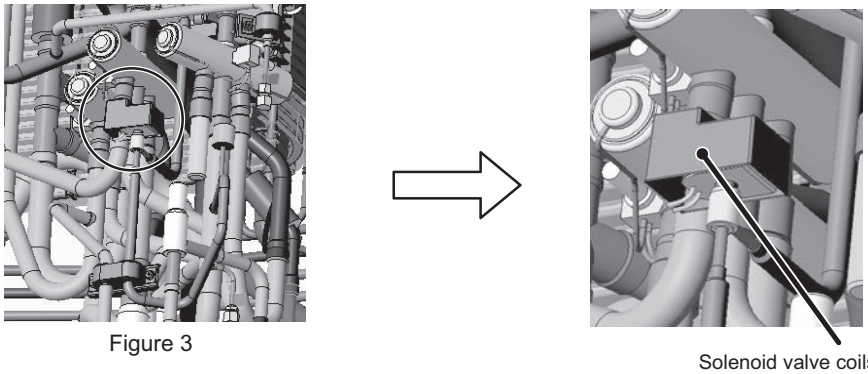

Figure 3

(3) Remove the pipe cover adjacent to four-way valves. (See Figure 4.)
*Save the pipe covers for later use.

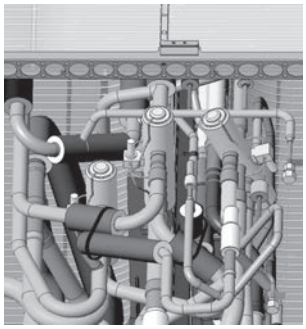

Figure 4

*Notes on replacing refrigerant circuit components (four-way valve, solenoid valve, and LEV)
- Be sure to perform non-oxidized brazing.
- Before heating the pipes, wrap the refrigerant circuit components with a wet towel to keep the temperature of the components from rising above 120°C.
- After brazing is done, check that the brazing is done properly and check for leaks before vacuum-drying the pipes.
- Direct the brazing torch flame away from the wiring and sheet metals inside the unit not to damage them.
- Wet felt sheets listed below (or its equivalent), and place them around the areas to be brazed to protect the heat exchanger, pipes, and pipe covers from being damaged from the brazing torch flame.
  Recommended felt sheets: Spatter felt 50CF-11 (5t x 1 m x 1 m) by TRUSCO Nakayama
  Felt sheets that meet the JIS standard (JIS A 1323 type A "Flame retardant testing method for spark droplets of welding and gas cutting on fabric sheets in construction works")

(4) Remove the braze from the pipe on the left side of four-way valve (21S4a) and between four-way valves (21S4b and 21S4c). (See Figure 5.)

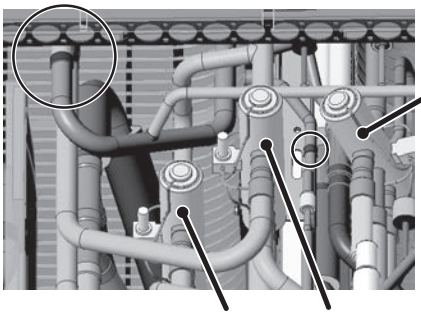

Figure 5

Replacement procedure for the four-way valve (21S4a)
(5A) Install a flame-protection plate. (See Figure 6.)

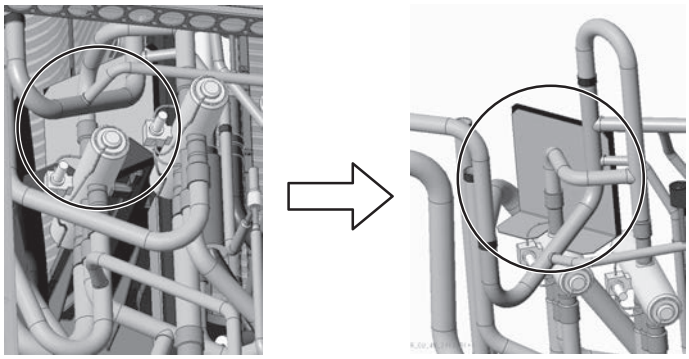

Figure 6

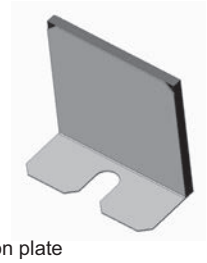

Flame-protection plate
*The replacement parts for this part is included with the replacement kit that contains four-way valve (21S4a). Remove the plate after replacing four-way valve (21S4a).

(6A) Remove the braze from the area above four-way valve (21S4a) as shown in Figure 7.

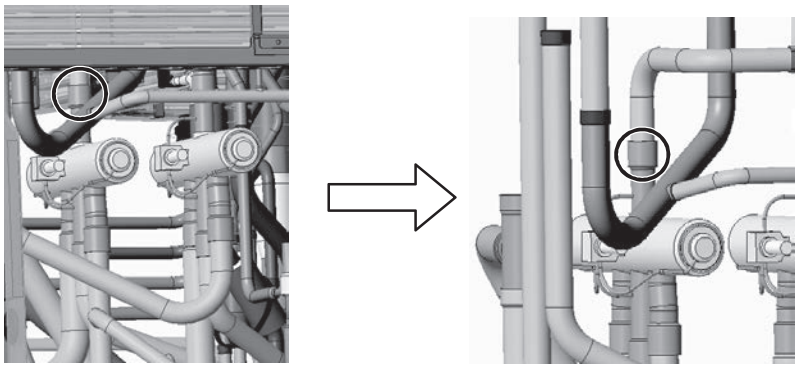

Figure 7

(7A) Remove the braze from the three areas below four-way valve (21S4a) as shown in Figure 8.

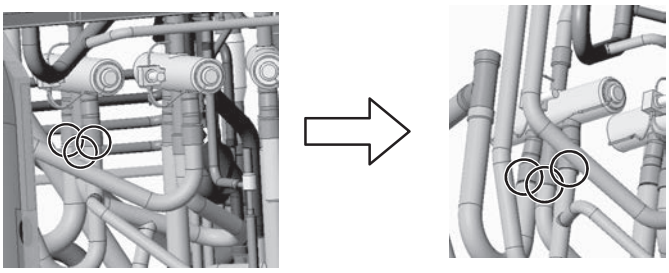

Figure 8

(8A) Mount a new four-way valve (21S4a).

Replacement procedure for the four-way valve (21S4b)
(9B) Follow the steps (6A) through (7A).

(10B) Mount a new four-way valve (21S4b).

Replacement procedure for the four-way valve (21S4c)
(11C) Remove the braze from the area above four-way valve (21S4c) as shown in Figure 9.

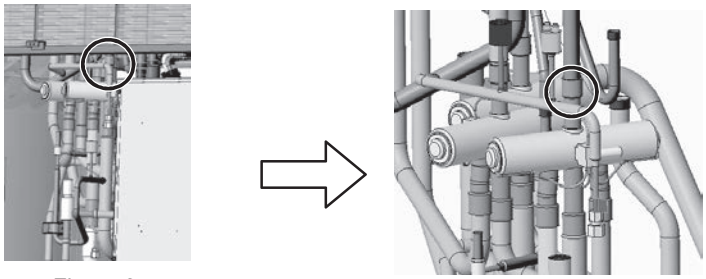

Figure 9

(12C) Remove the braze from the two areas below four-way valve (21S4c) as shown in Figure 10.

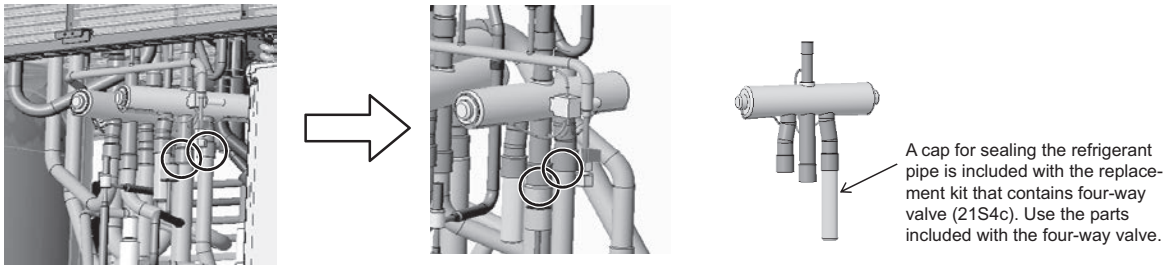

Figure 10

(13C) Mount a new four-way valve (21S4c). Figure 11 shows how to position a new four-way valve.

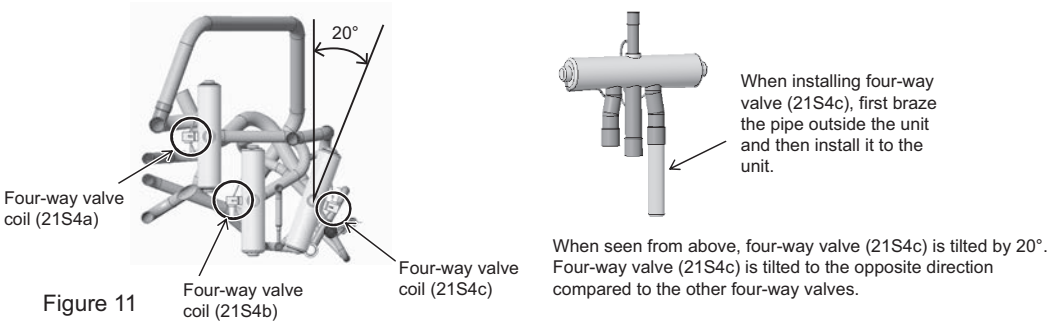

Figure 11

3. EXL-module (four-way valve (21S4a and 21S4b))

Explained below is the procedure for replacing four-way valve 21S4a (on the left when seen from the front of the unit) and four-way valve 21S4b (on the right when seen from the front of the unit). (See Figure 1.)

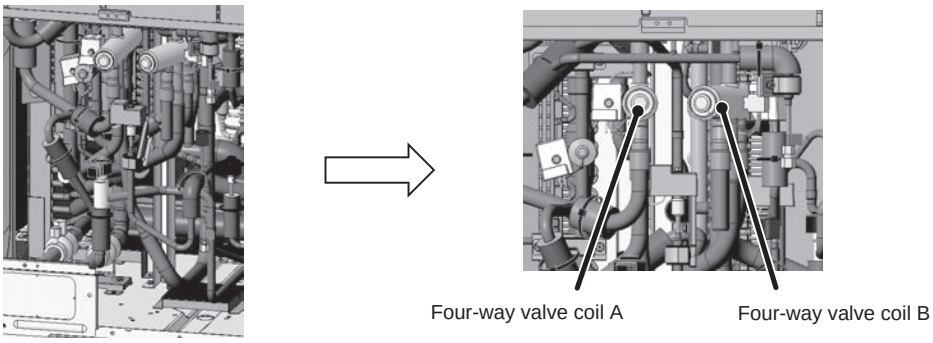

Figure 1

(1) Remove the three pipe covers, wirings, and sheet metals. (See Figure 2.)

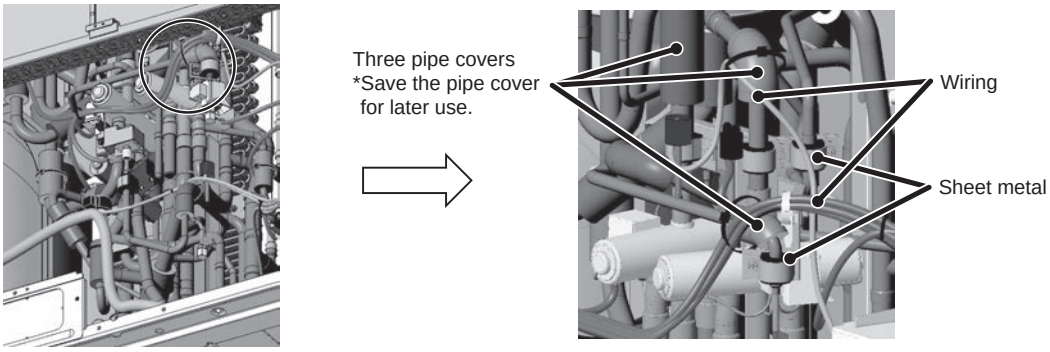

Figure 2

(2) Remove the coils (four-way valves (21S4a and 21S4b) and solenoid valve (SV2)), coil cover, wiring, and sheet metal. (See Figure 3.)

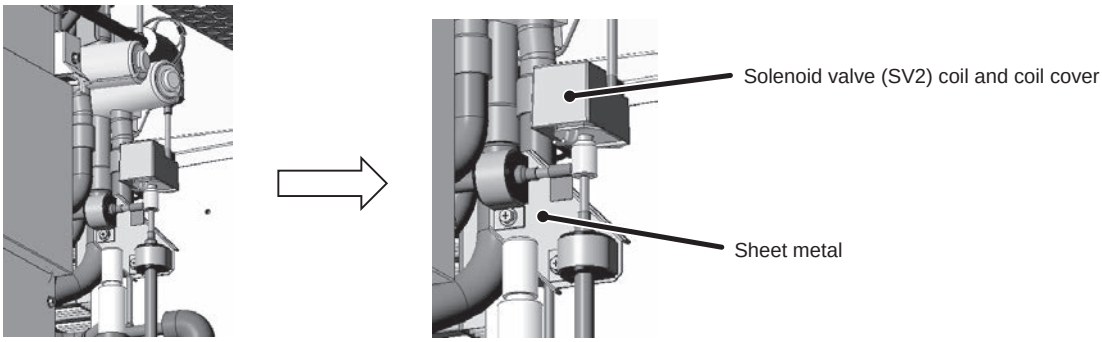

Figure 3

(3) Remove the sheet metals and the pipe covers adjacent to the four-way valves. (See Figure 4.)
*Save the pipe cover for later use.

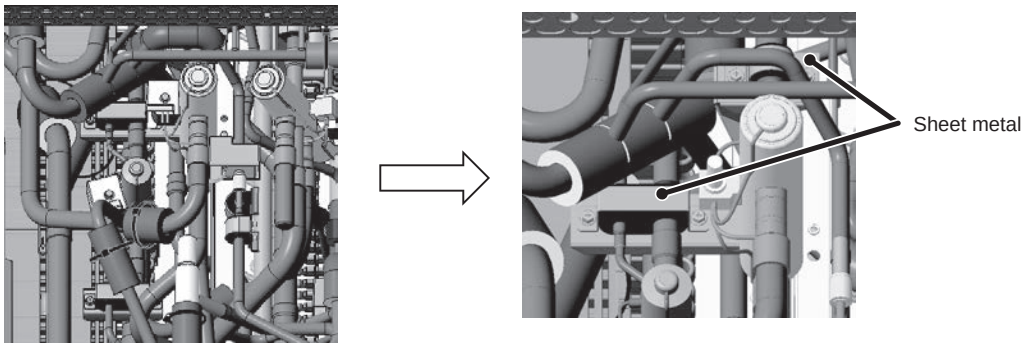

Figure 4

*Notes on replacing refrigerant circuit components (four-way valve, solenoid valve, and LEV)
- Be sure to perform non-oxidized brazing.
- Before heating the pipes, wrap the refrigerant circuit components with a wet towel to keep the temperature of the components from rising above 120°C.
- After brazing is done, check that the brazing is done properly and check for leaks before vacuum-drying the pipes.
- Direct the brazing torch flame away from the wiring and sheet metals inside the unit not to damage them.
- Wet felt sheets listed below (or its equivalent), and place them around the areas to be brazed to protect the heat exchanger, pipes, and pipe covers from being damaged from the brazing torch flame.
  Recommended felt sheets: Spatter felt 50CF-11 (5t x 1 m x 1 m) by TRUSCO Nakayama
  Felt sheets that meet the JIS standard (JIS A 1323 type A "Flame retardant testing method for spark droplets of welding and gas cutting on fabric sheets in construction works")

(4) Remove the braze from the left side of four-way valve (21S4a) and from the pipe between four-way valves (21S4a and 21S4b). (See Figure 5.)

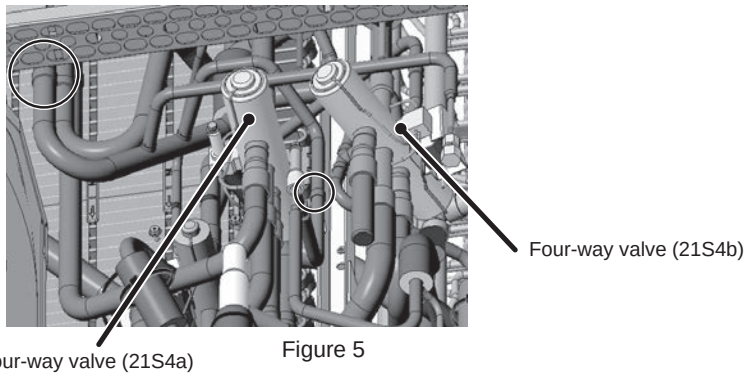

Figure 5

Replacement procedure for four-way valve (21S4a)

(5) Remove the braze from the area above four-way valve (21S4a). (See Figure 6.)

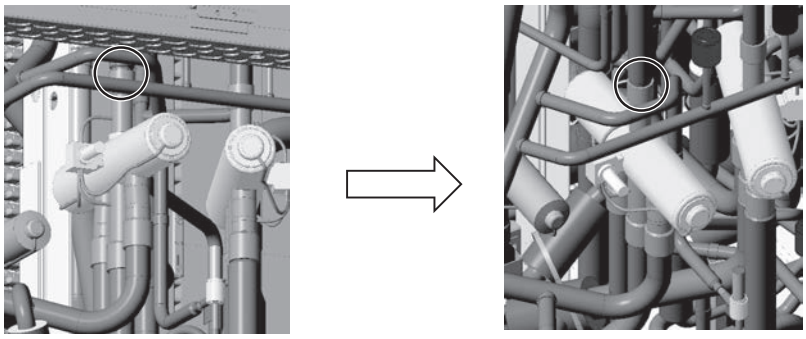

Figure 6

(6) Remove the braze from the three areas below four-way valve (21S4a). (See Figure 7.)

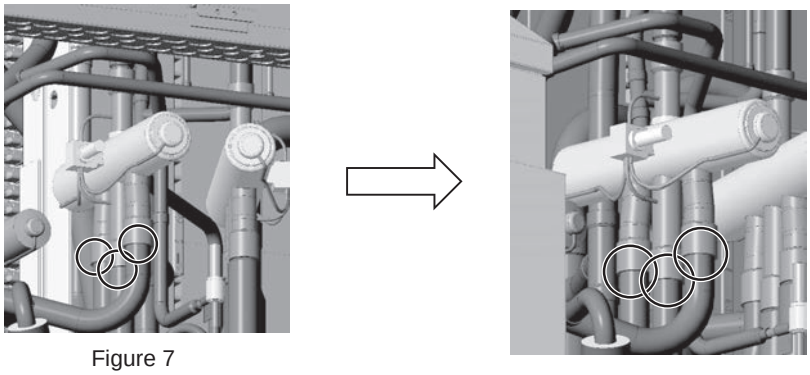

Figure 7

(7) Mount a new four-way valve (21S4a).

Replacement procedure for four-way valve (21S4b)
(8) Follow the steps (5) and (6).

(9) Mount a new four-way valve (21S4b). Figure 8 shows how to position a new four-way valve.
When seen from above, four-way valve (21S4b) is tilted by 20° with respect to the vertical plane.
Coils on four-way valves 21S4a and 21S4b face different directions.

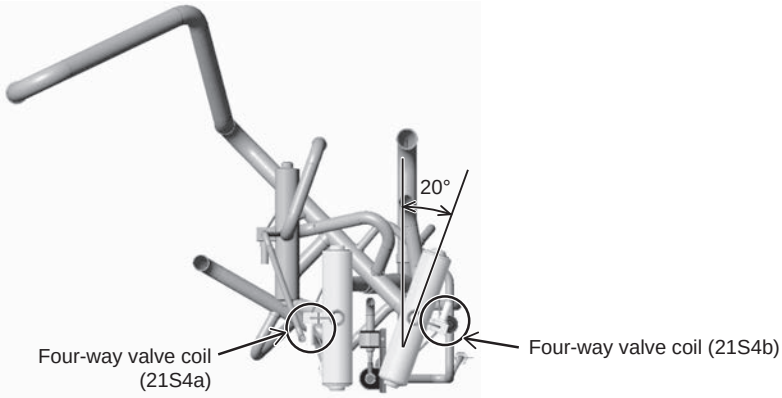

Figure 8

8-13-6 Replacement Procedure for the Check Valve Block Assembly <Type A>

1. S, L-module

Explained below is the procedure for replacing the check valve block assembly.

(1) Remove the top compressor cover by unscrewing the three screws. (See Figure 1.)
Remove the compressor cover by unhooking the hooks on the back.

(2) Remove the front compressor covers by unscrewing the four screws. (See Figure 2.)

(3) Cut the two tie bands holding TH4 and TH15, and remove the wiring from the rubber bush on the left compressor cover. (See Figure 3.)

(4) Remove the left compressor cover by unscrewing the two screws. (See Figure 4.)

(5) Remove the saddle and the rubber spacers on the compressor by unscrewing the screw. (See Figure 5.) (EP72, 96, 120, and 144 only.)

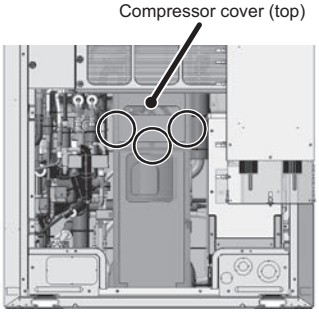

Figure 1

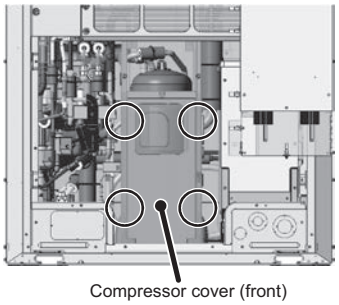

Figure 2

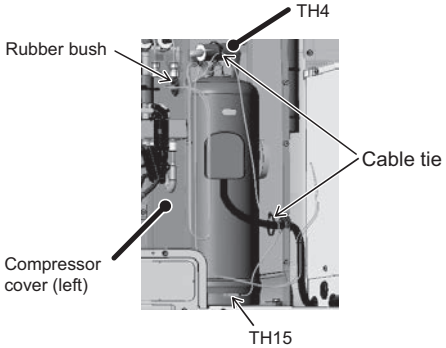

Figure 3

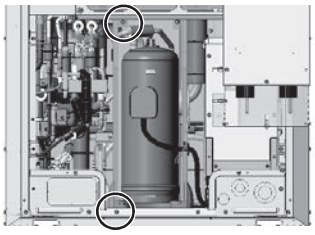

Figure 4

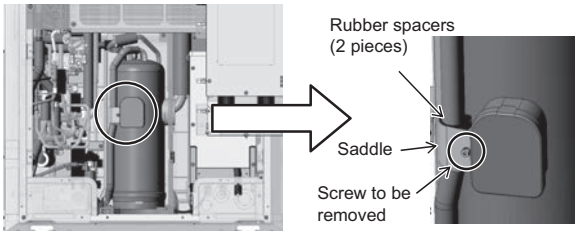

Figure 5

(6) Remove the coils, coil covers, pipe covers, and adjacent wirings of the four-way valves, solenoid valves, and LEVs. (See Figures 6-1 through 6-3.)

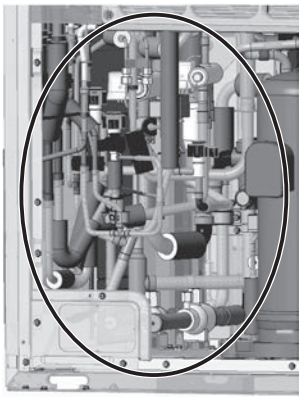

Figure 6-1

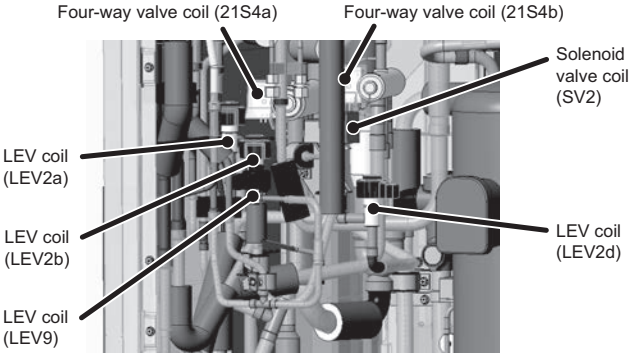

Figure 6-2 (Four-way valve, solenoid valve, LEV coil, coil cover)

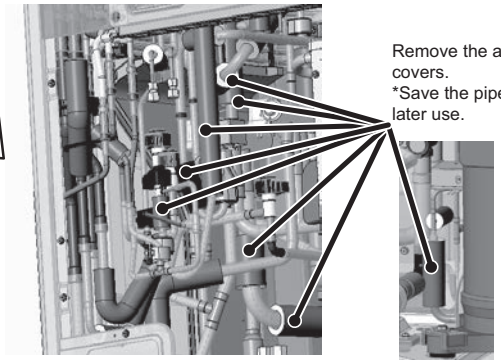

Figure 6-3 (adjacent pipe covers)

(7) Cut the bands on the TH3 wiring, and remove the pipe covers and rubber spacer on the heat-exchanger side. (See Figure 7.)

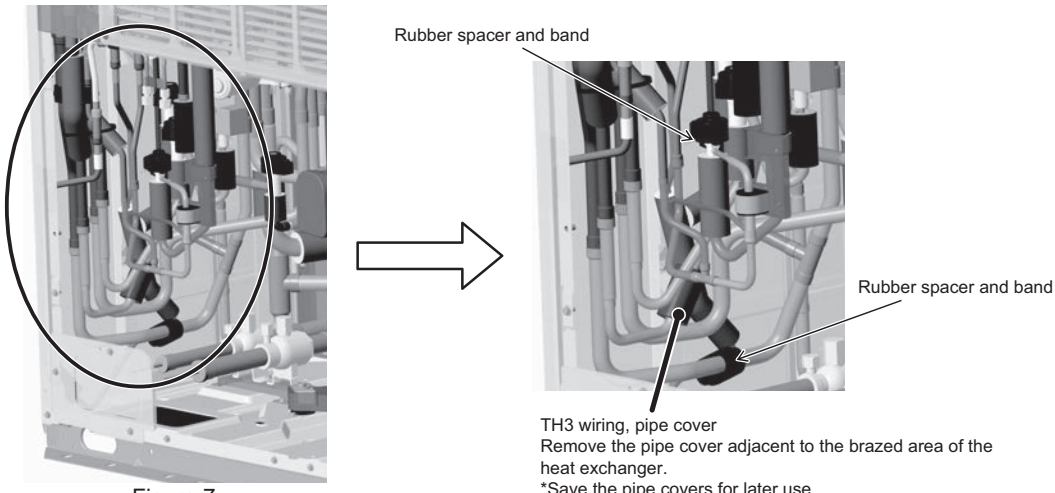

Figure 7

(8) Remove the pipe covers and the thermal insulation on the compressor. (See Figure 8.) (EP72, 96, 120, and 144 only.)

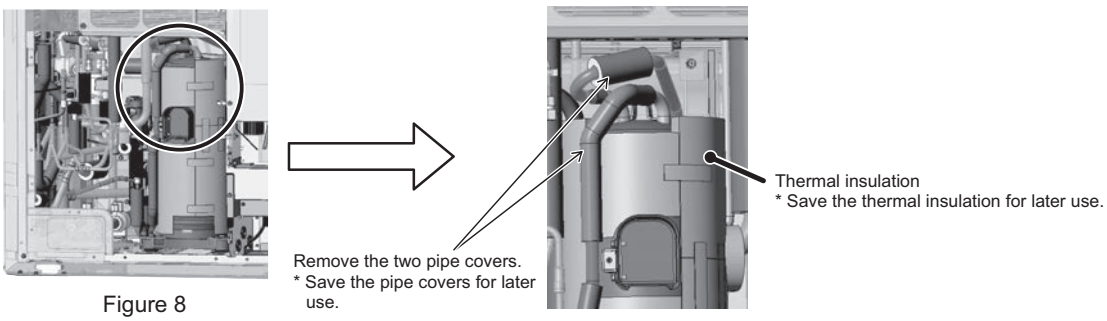

Figure 8

*Notes on replacing refrigerant circuit parts (check valve block assemblies, four-way valves, solenoid valves, and LEVs)
- Be sure to perform non-oxidized brazing.
- Before heating the pipes, wrap the refrigerant circuit components with a wet towel to keep the temperature of the components from rising above 120°C.
- After brazing is done, check that the brazing is done properly and check for leaks before vacuum-drying the pipes.
- Direct the brazing torch flame away from the wiring and sheet metals inside the unit not to damage them.
- Wet felt sheets listed below (or its equivalent), and place them around the areas to be brazed to protect the heat exchanger, pipes, and pipe covers from being damaged from the brazing torch flame.
  Recommended felt sheets: Spatter felt 50CF-11 (5t x 1 m x 1 m) by TRUSCO Nakayama
  Felt sheets that meet the JIS standard (JIS A 1323 type A "Flame retardant testing method for spark droplets of welding and gas cutting on fabric sheets in construction works")

Check valve block replacement procedure

(9) Remove the braze at the three areas circled in the figure to remove LEV9 assembly. (See Figure 9.)

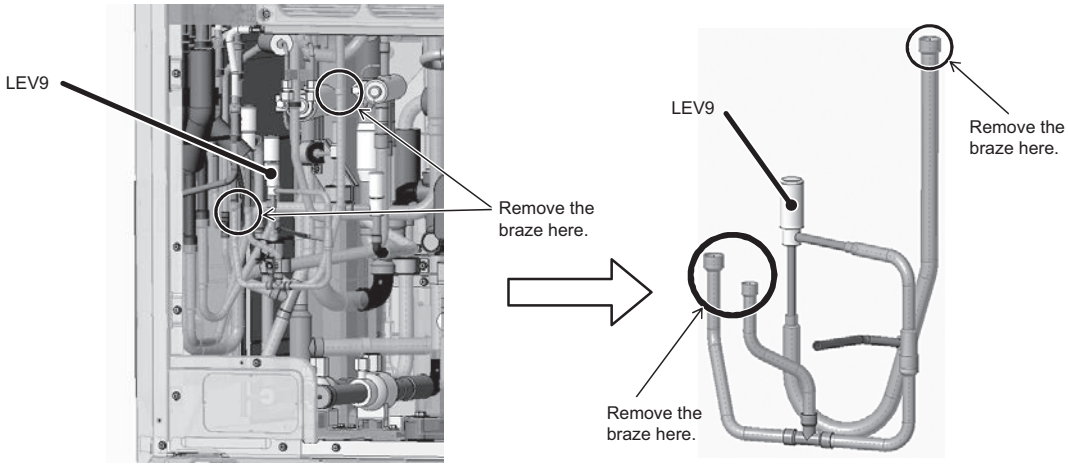

Figure 9 LEV9 assembly

(10) Remove the braze at the two areas circled in Figure 10 to remove SV2 assembly. (See Figure 10.)

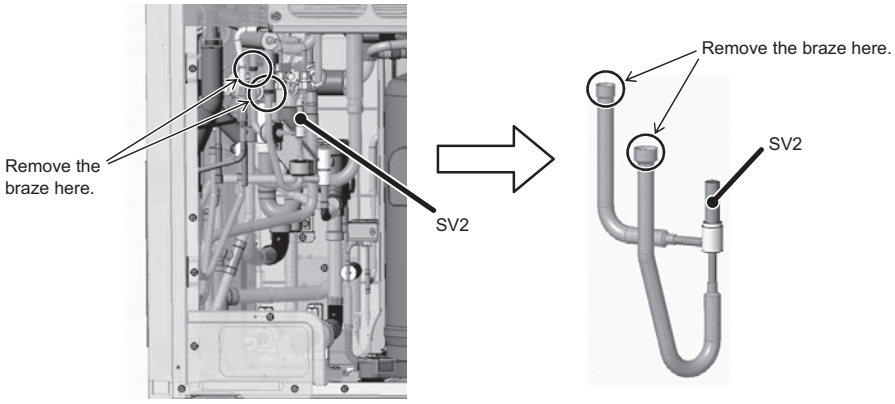

Figure 10

SV2 assembly

(11) Cut the pipe with a pipe cutter at the area shown in Figure 11. (EP72, 96, 120, and 144 only.)
Remove the braze at the area circled in Figure 11 to remove LEV4 assembly. (See Figure 11.)

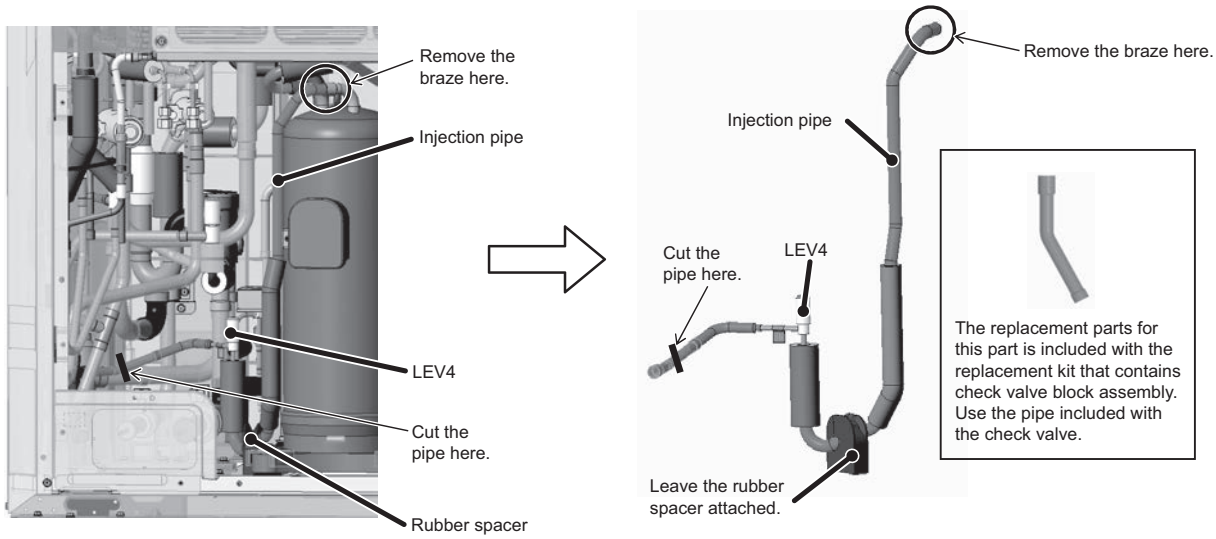

Figure 11

LEV4 assembly

(12) Remove the braze at the three areas circled in Figure 12 to remove LEV2a and 2b assembly. (See Figure 12.)

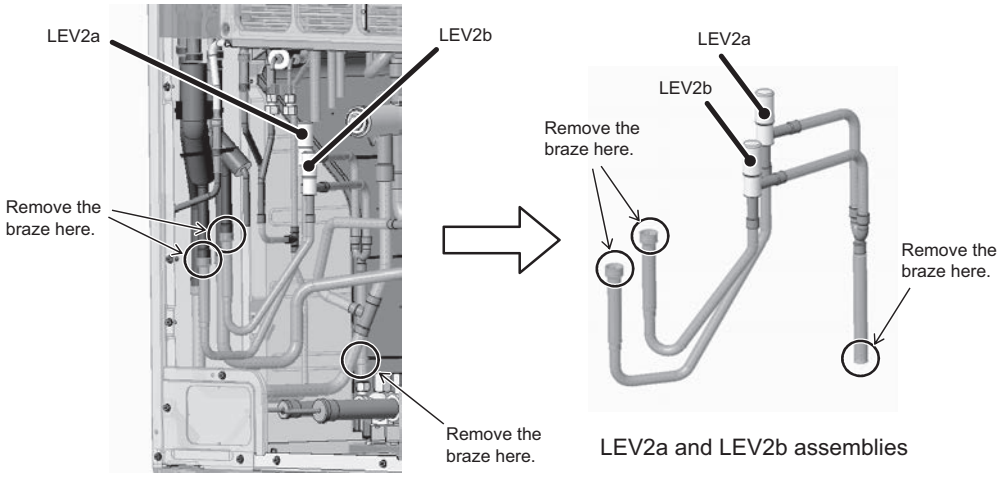

Figure 12

(13) There are two types (A and B) of gas-liquid separators that connect to the check valve block as shown below.
The removal procedure depends on the type of gas-liquid separator. Follow the appropriate procedure that corresponds to the gas-liquid separator type.
Removal procedures for gas-liquid separators A and B are explained separately below.

Gas-liquid separator A

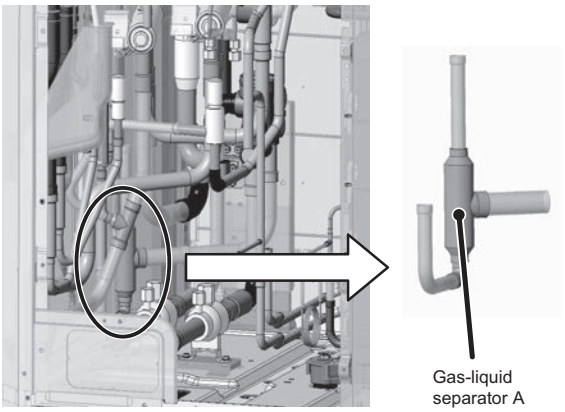

Figure 13-1

Gas-liquid separator B

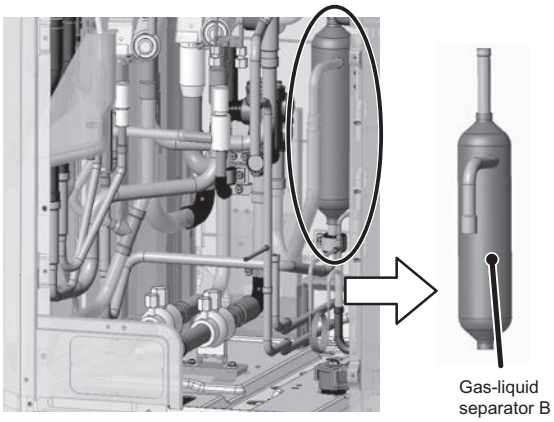

Figure 13-2

(14) Cut the pipe below four-way valves (21S4a and 21S4b) with a pipe cutter as shown in the figure. Remove the braze at the areas circled in the figure to remove 21S4a and 21S4b assemblies.

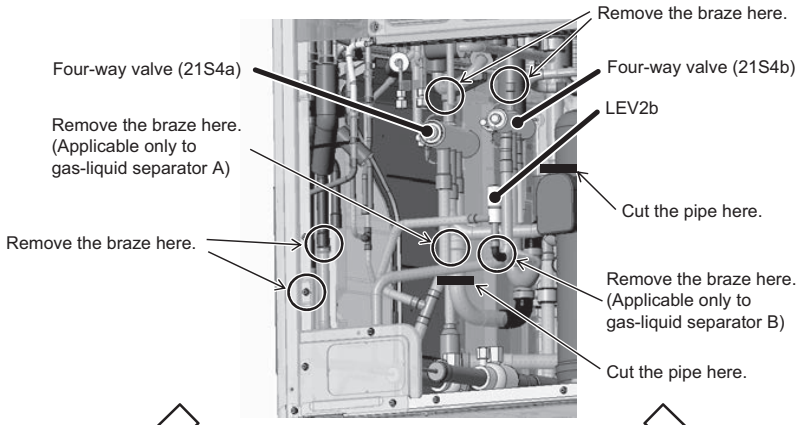

Figure 14

Gas-liquid separator A (2 areas to be cut. 5 areas to remove braze from. See Figure 14-1.)

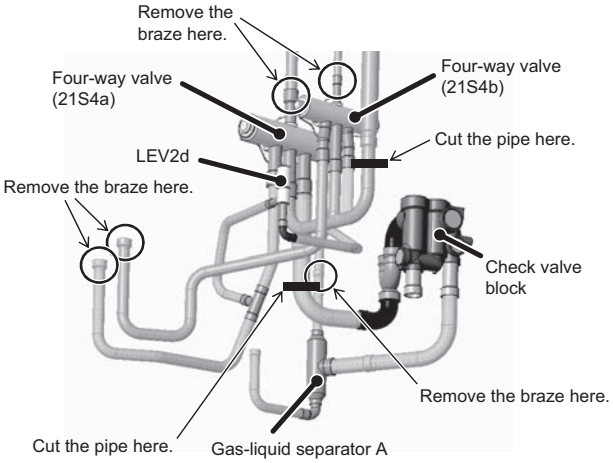

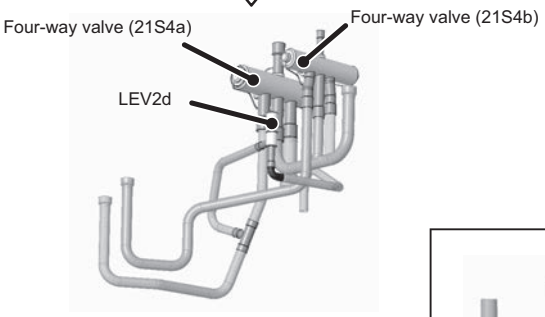

Four-way valve (21S4a and 21S4b) assemblies

Figure 14-1

Gas-liquid separator B (2 areas to be cut. 5 areas to remove braze from. See Figure 14-2.)

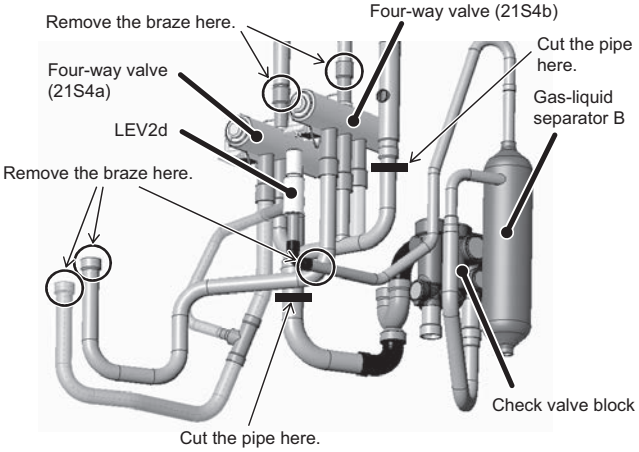

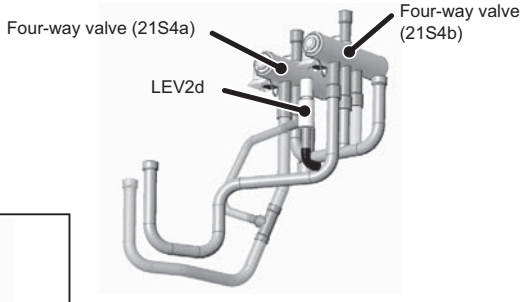

Four-way valve (21S4a and 21S4b) assemblies

Figure 14-2

The replacement parts for this part is included with the replacement kit that contains check valve block assembly. Use the pipe included with the check valve. (Applicable to both gas-liquid separators A and B)

(15) Remove the braze from the pipe where circled in the figure, and unscrew the two screws on the check valve block fixing plate to remove the check valve block assembly.

Gas-liquid separator A (2 areas to remove braze from. 2 screws to be removed. See Figure 15-1.)

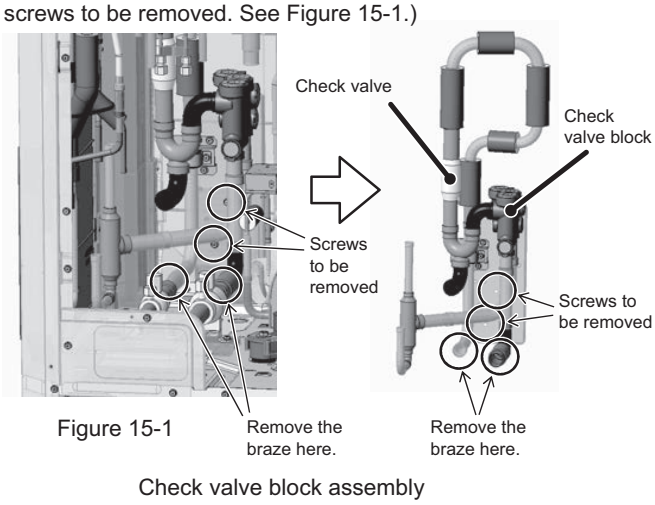

Figure 15-1

Gas-liquid separator B
(1 area to be cut. 2 areas to remove braze from. 3 screws to be removed. See Figure 15-2.)

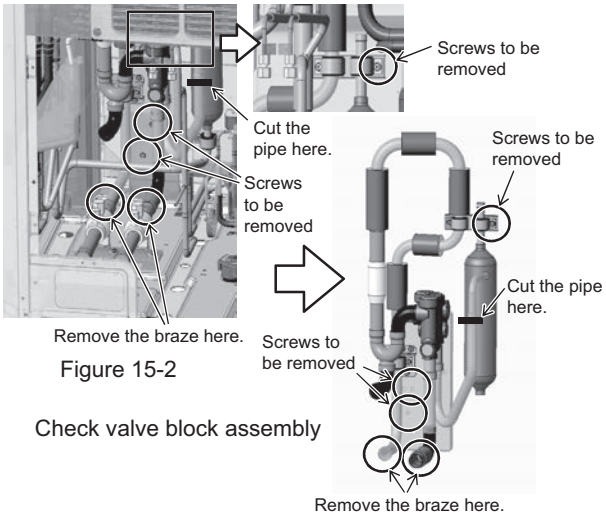

Figure 15-2

(16) Remove the braze from the pipe that connects to the gas-liquid separator (where circled in the figure), remove the two screws on the check valve block fixing plate, and replace the check valve block assembly with a new one.

Gas-liquid separator A (1 area to remove braze from. 2 screws to be removed. 1 area to be brazed. See Figure 16-1.)

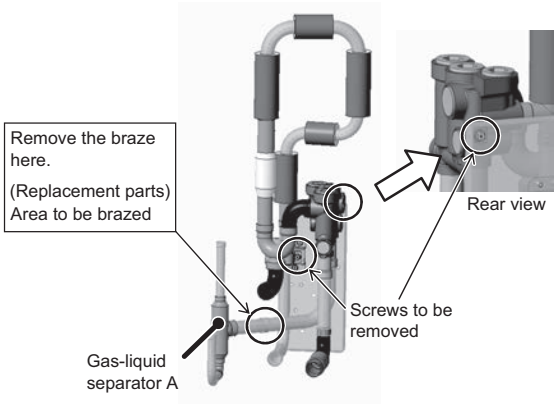

Figure 16-1

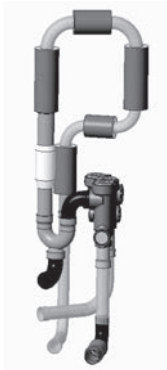

Check valve block assembly
(Replacement parts)

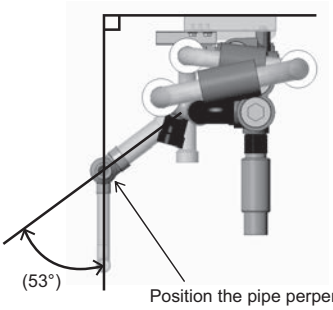

Position the pipe perpendicular to the horizontal plane of the sheet metal (when seen from above), and braze it on.

Gas-liquid separator B (3 screws. See Figure 16-2.)

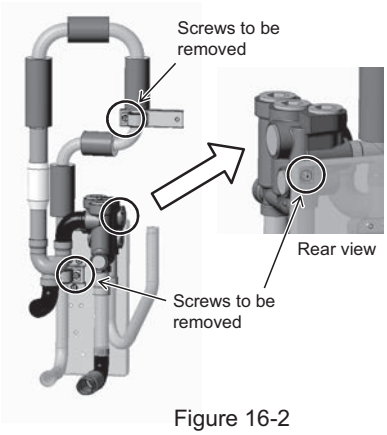

Figure 16-2

Check valve block assembly
(Replacement parts)

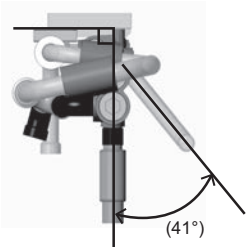

(17) Re-place the four-way valves (21S4a and 21S4b) that were removed in step (14). Figure 17-1 shows how to position a new four-way valves.
Replace the center pipe below four-way valves (21S4a and 21S4b). (3 areas to remove braze from. 2 areas to be brazed. See Figure 17-2.)

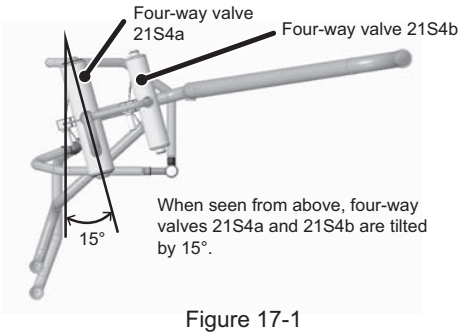

Figure 17-1

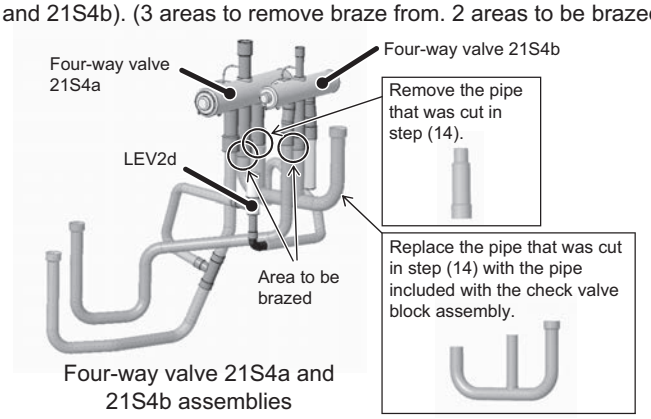

Four-way valve 21S4a and 21S4b assemblies
Figure 17-2

(18) To make it easier to connect four-way valves (21S4a and 21S4b), cut the pipes above four-way valves (21S4a and 21S4b) with a pipe cutter. Cut the pipe with an expanded end that is included with the check valve block assembly to the same length as the pipe that was removed from the on-site pipe. (See Figure 18.)

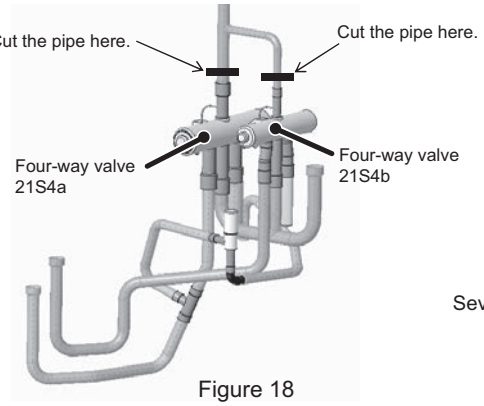

Figure 18

Four-way valve (21S4a)	Four-way valve (21S4b)
<S module>	<S module>
Pipe diameter: φ19.05	Pipe diameter: φ12.7
ID of the pipe with an extended end: φ19.05	ID of the pipe with an extended end: φ12.7
<L module>	<L module>
Pipe diameter: φ19.05	Pipe diameter: φ19.05
ID of the pipe with an extended end: φ22.2	ID of the pipe with an extended end: φ19.05

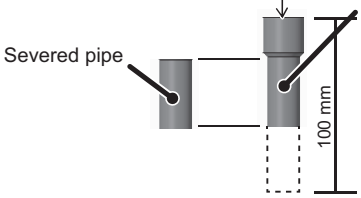

Cut the pipe with an expanded end that is included with the check valve block assembly so that the section of the pipe excluding the extended end will be the same length as the pipe that was removed from the on-site pipe.

*The included pipe with an expanded end is 100 mm long. Cut it to the appropriate length.

(19) Re-place the check valve block assembly that was replaced in step (16).

Gas-liquid separator A (2 areas to be brazed. 2 screws. See Figure 19-1.)

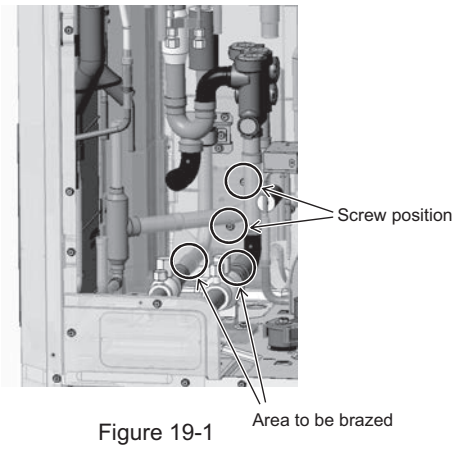

Figure 19-1

Gas-liquid separator B (3 areas to be brazed. 3 screws. See Figure 19-2.)

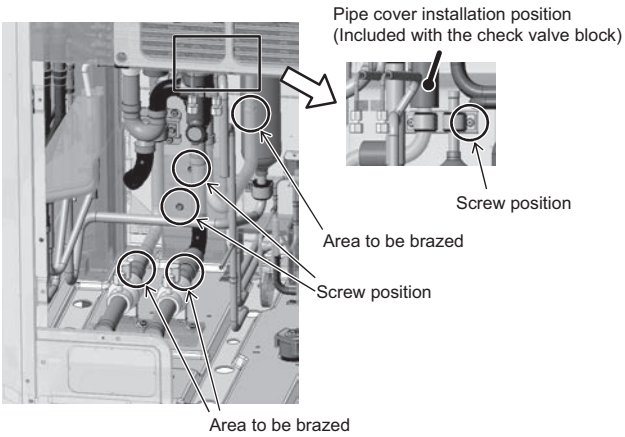

Figure 19-2

(20) Re-place the check valve assemblies (21S4a and 21S4b) whose pipes were replaced in step (17).

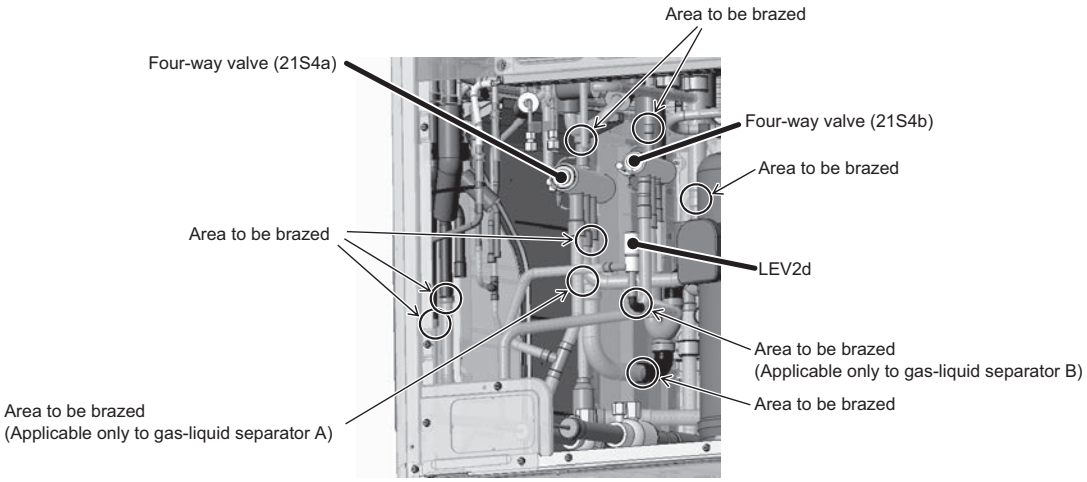

Figure 20

Gas-liquid separator A (8 areas to be brazed. See Figure 20-1.)

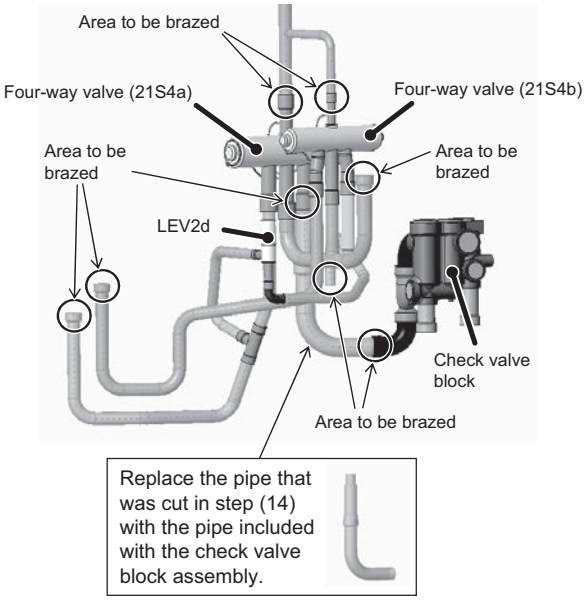

Figure 20-1

Gas-liquid separator B (8 areas to be brazed. See Figure 20-2.)

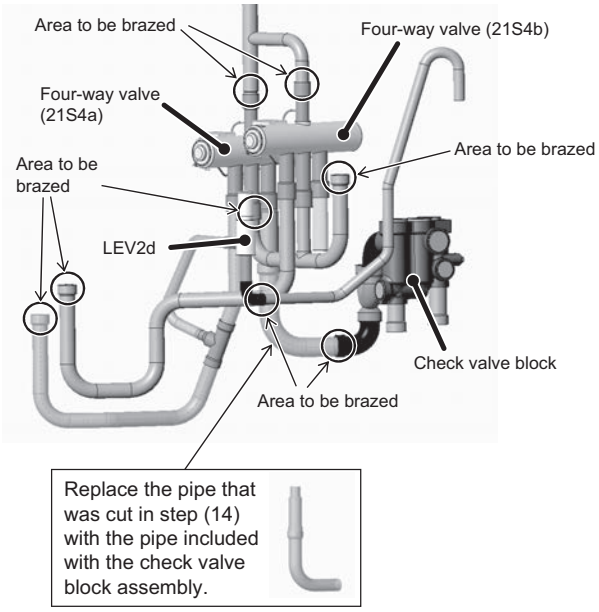

Figure 20-2

(21) Re-place the LEV4 assembly that was removed in step (11) as it was. (3 areas to be brazed. See Figure 21.) (EP72, 96, 120, and 144 only.)

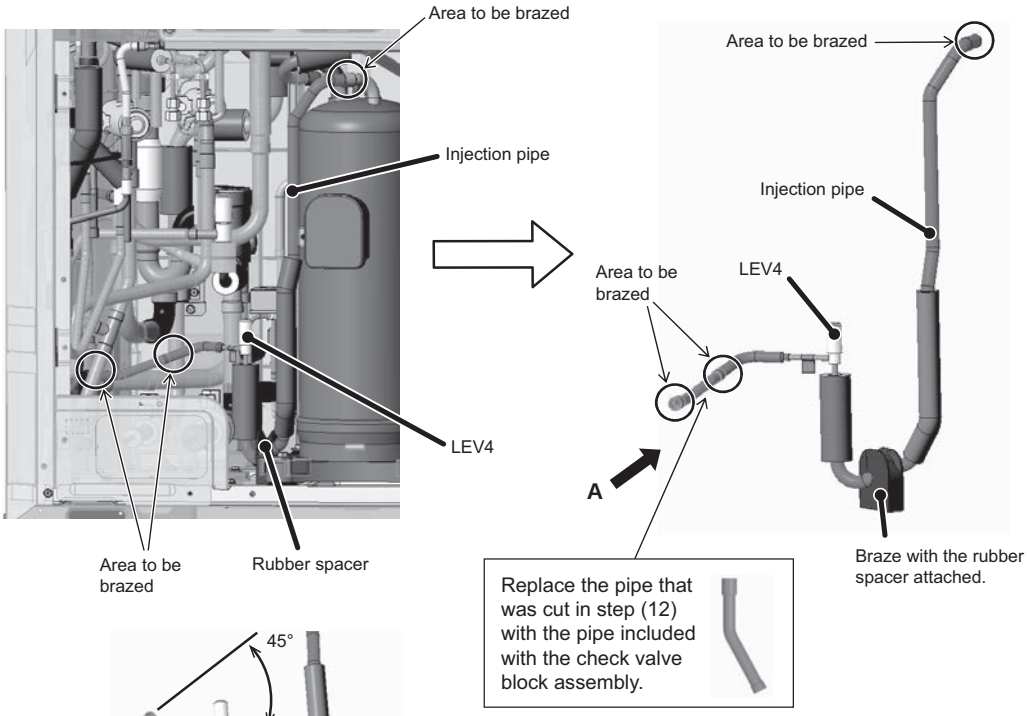

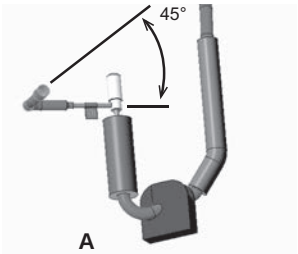

Figure 21

(22) Re-place the components that were removed as they were. This step completes the check valve block assembly replacement procedure.

2. XL-module

Explained below is the procedure for replacing the check valves. (See Figure 1.)

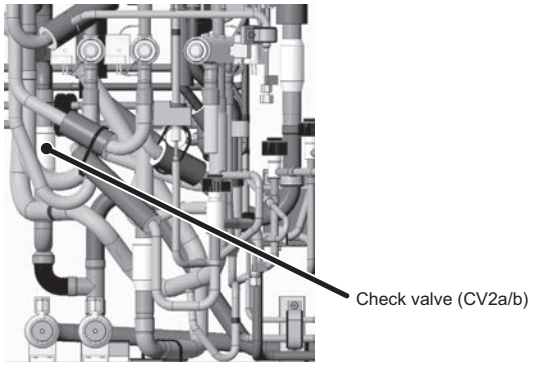

Figure 1

(1) Remove three pipe covers. (See Figure 2.)

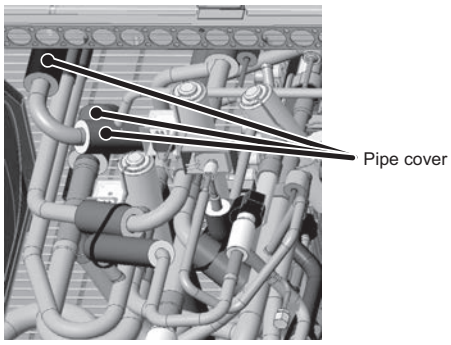

Figure 2

(2) Cut the pipe near the check valve in two areas where circled. (See Figure 3.)

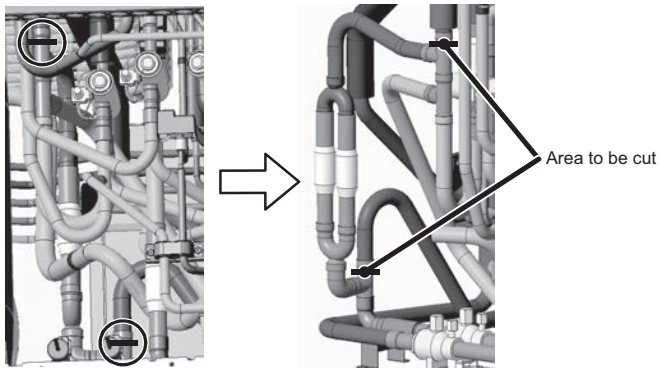

Figure 3

*Notes on replacing refrigerant circuit parts (check valve block assemblies, four-way valves, solenoid valves, and LEVs)
- Be sure to perform non-oxidized brazing.
- Before heating the pipes, wrap the refrigerant circuit components with a wet towel to keep the temperature of the components from rising above 120°C.
- After brazing is done, check that the brazing is done properly and check for leaks before vacuum-drying the pipes.
- Direct the brazing torch flame away from the wiring and sheet metals inside the unit not to damage them.
- Wet felt sheets listed below (or its equivalent), and place them around the areas to be brazed to protect the heat exchanger, pipes, and pipe covers from being damaged from the brazing torch flame.
  Recommended felt sheets: Spatter felt 50CF-11 (5t x 1 m x 1 m) by TRUSCO Nakayama
  Felt sheets that meet the JIS standard (JIS A 1323 type A "Flame retardant testing method for spark droplets of welding and gas cutting on fabric sheets in construction works")

(3) Remove the braze from the pipe where circled in the figure. (See Figure 4.)

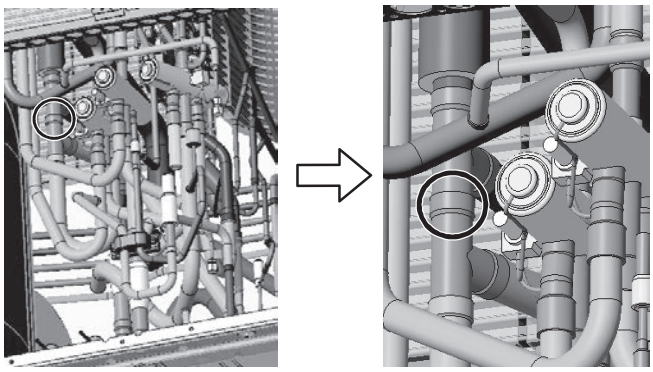

Figure 4

(4) Remove the braze from the pipe where circled in the figure. (See Figure 5.)

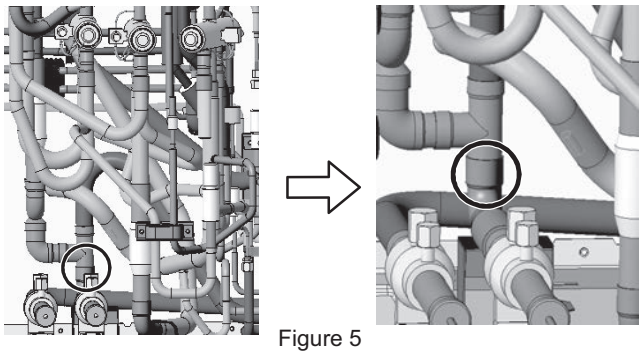

Figure 5

(5) Remove the check valve assembly (CV2a/b) from the area indicated in Figure 6.

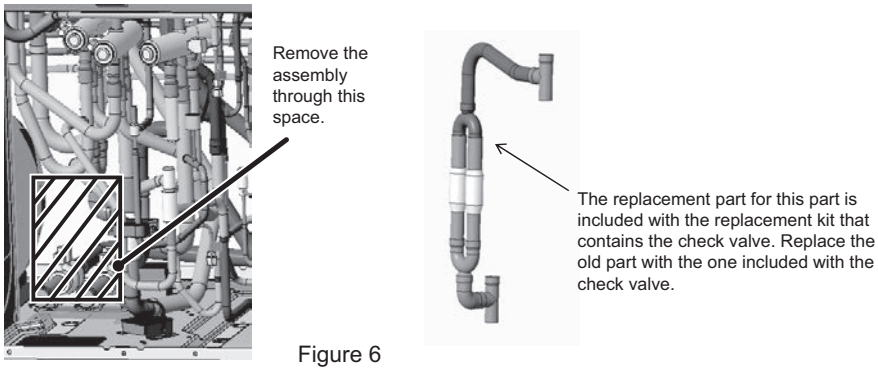

Figure 6

(6) Braze the replacement parts at four areas. (See Figure 7.)

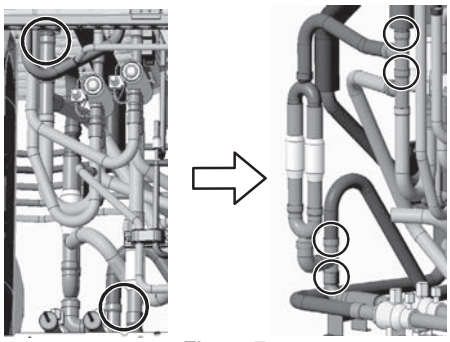

Figure 7

This step completes the check valve replacement procedure. Re-place the components that were removed as they were.

3. EXL-module

Explained below is the procedure for replacing the check valves. (See Figure 1.)

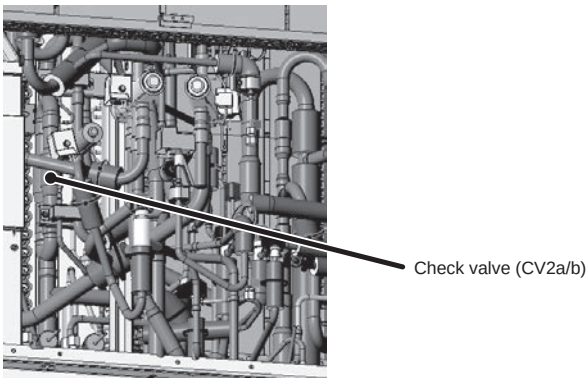

Figure 1

(1) Remove the pipe cover. (See Figure 2.)

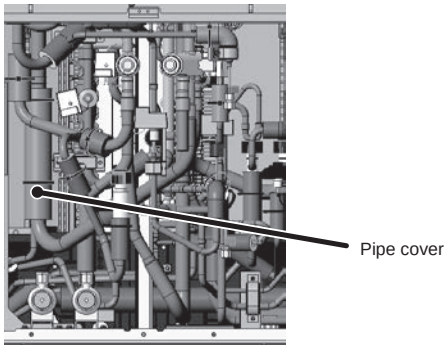

Figure 2

(2) Cut the pipe at the location adjacent to the check valve (where indicated in the figure). (See Figure 3.)

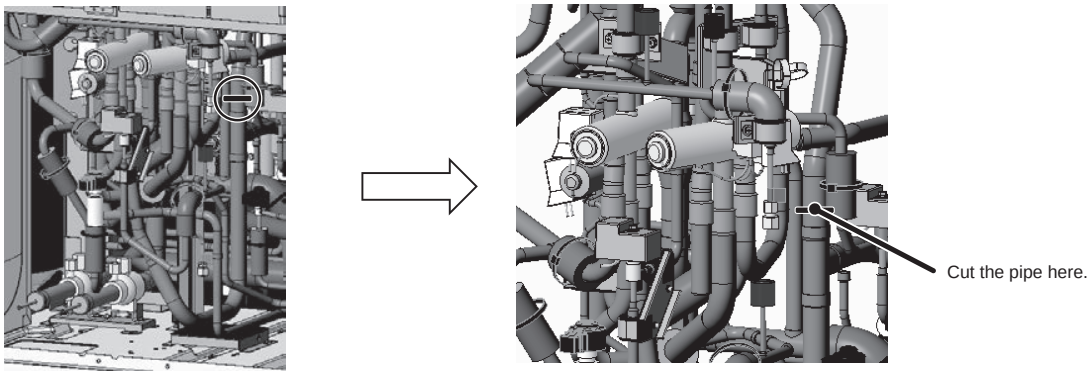

Figure 3

*Notes on replacing refrigerant circuit parts (check valve block assemblies, four-way valves, solenoid valves, and LEVs)
- Be sure to perform non-oxidized brazing.
- Before heating the pipes, wrap the refrigerant circuit components with a wet towel to keep the temperature of the components from rising above 120°C.
- After brazing is done, check that the brazing is done properly and check for leaks before vacuum-drying the pipes.
- Direct the brazing torch flame away from the wiring and sheet metals inside the unit not to damage them.
- Wet felt sheets listed below (or its equivalent), and place them around the areas to be brazed to protect the heat exchanger, pipes, and pipe covers from being damaged from the brazing torch flame.
  Recommended felt sheets: Spatter felt 50CF-11 (5t x 1 m x 1 m) by TRUSCO Nakayama
  Felt sheets that meet the JIS standard (JIS A 1323 type A "Flame retardant testing method for spark droplets of welding and gas cutting on fabric sheets in construction works")

(3) Remove the braze from the area shown in the figure. (See Figure 4.)

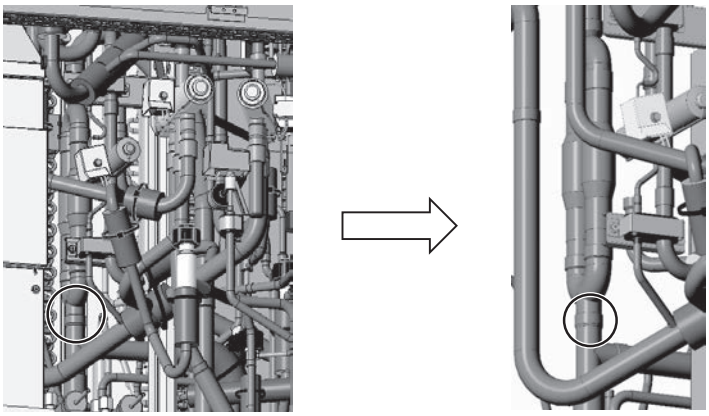

Figure 4

(4) Remove the check valve assembly (CV2a/b) from the area indicated in Figure 5.

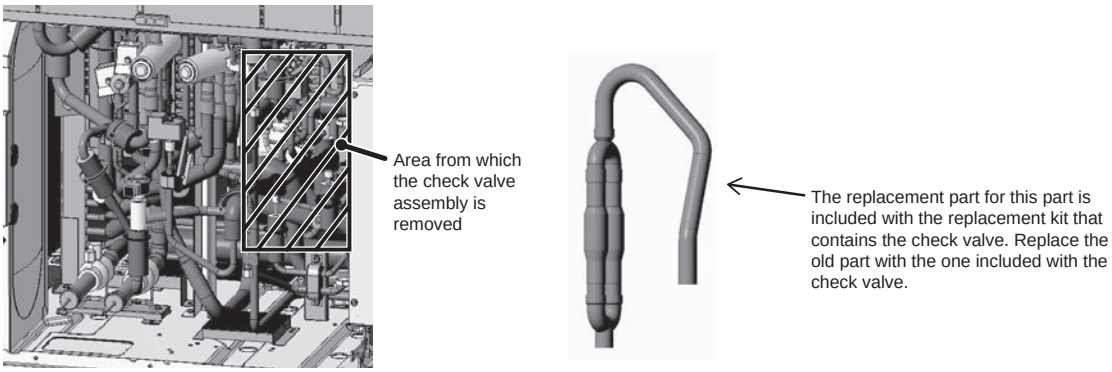

Figure 5

(5) Braze the replacement parts at the two areas. (See Figure 6.)

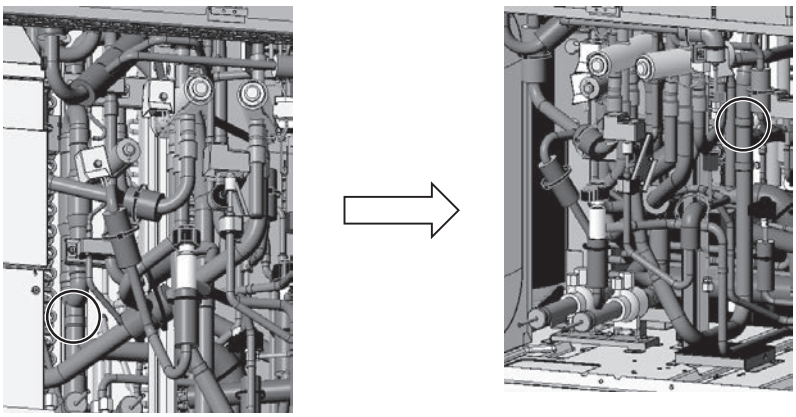

Figure 6

This step completes the check valve replacement procedure. Re-place the components that were removed as they were.

8-13-7 Replacement Procedure for the Check Valve Block Assembly <Type A1>

1. S, L-module

Explained below is the procedure for replacing the check valve block assembly.

(1) Remove the top compressor cover by unscrewing the three screws. (See Figure 1.)
Remove the compressor cover by unhooking the hooks on the back.

(2) Remove the front compressor covers by unscrewing the four screws. (See Figure 2.)

(3-1) Cut the two cable ties holding TH4 and TH15, and remove the wiring from the rubber bush on the left compressor cover for TH4, TH15 and the crankcase heater (CH11). (See Figure 3-1.) (P72, 96, 120, and 144 only.)

(3-2) Cut the three cable ties holding TH4, TH15 and Crankcase heater (CH11), and remove the wiring from the rubber bush on the left compressor cover. (See Figure 3-2.) (EP72, 96, 120, and 144 only.)

(4) Remove the left compressor cover by unscrewing the two screws. (See Figure 4.)

(5) Remove the saddle and the rubber spacers on the compressor by unscrewing the screw. (See Figure 5.) (EP72, 96, 120, and 144 only.)

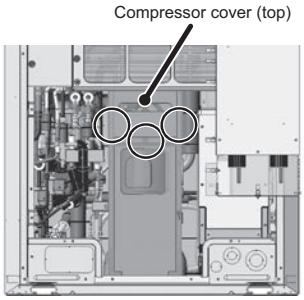

Figure 1

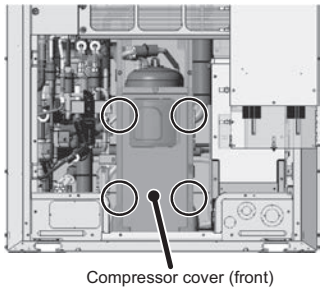

Figure 2

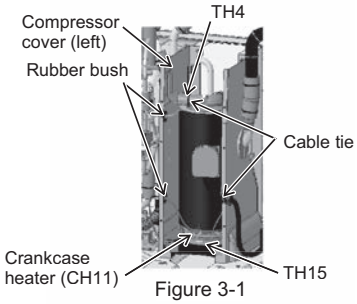

Figure 3-1

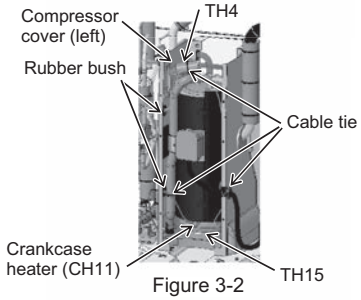

Figure 3-2

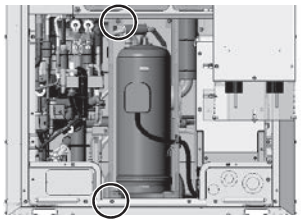

Figure 4

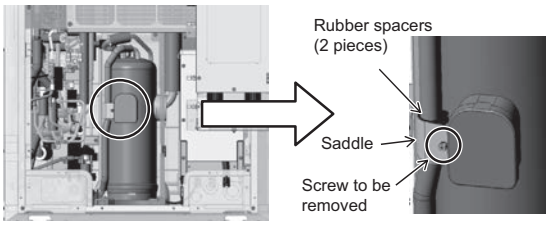

Figure 5

(6) Remove the coils, coil covers, pipe covers, and adjacent wirings of the four-way valves, solenoid valves, and LEVs. (See Figures 6-1 through 6-3.)

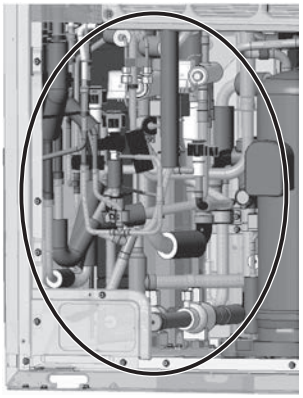

Figure 6-1

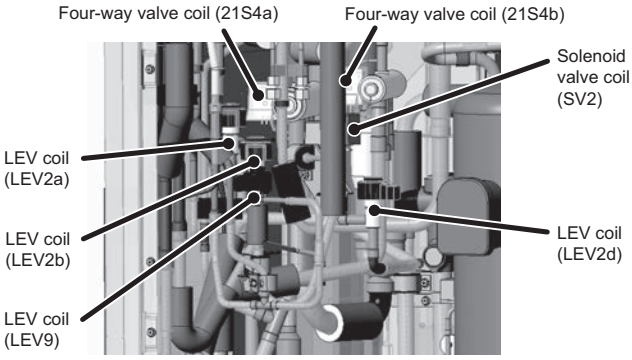

Figure 6-2 (Four-way valve, solenoid valve, LEV coil, coil cover)

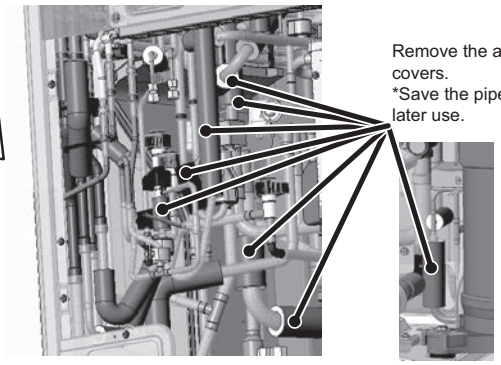

(7) Cut the bands on the TH3 wiring, and remove the pipe covers and rubber spacer on the heat-exchanger side. (See Figure 7.)

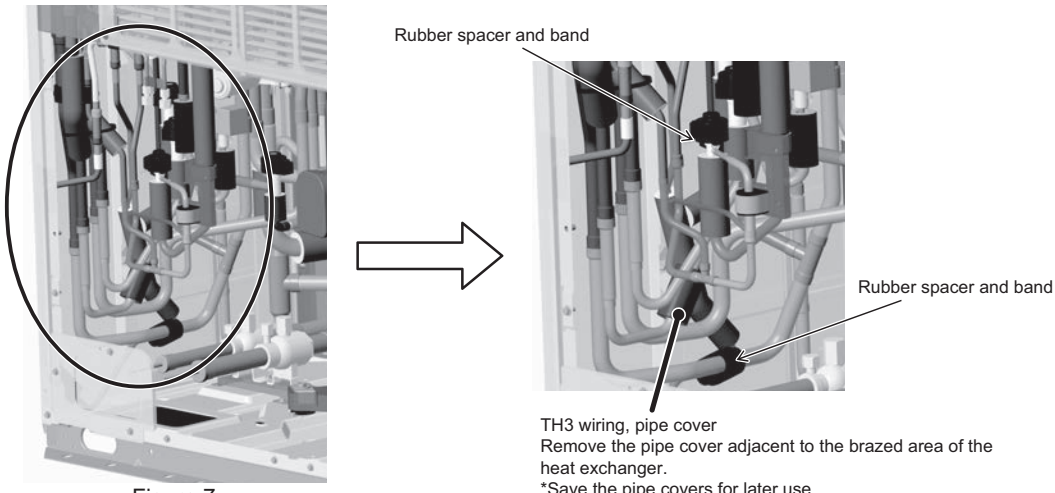

Figure 7

(8) Remove the pipe covers and the thermal insulation on the compressor. (See Figure 8.) (EP72, 96, 120, and 144 only.)

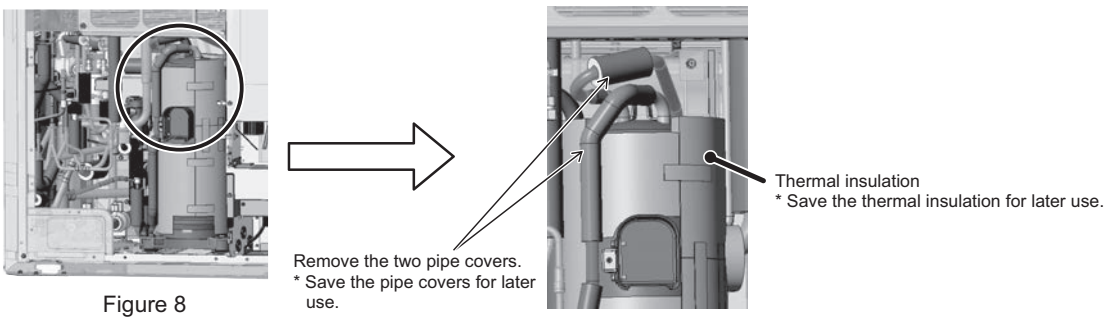

Figure 8

*Notes on replacing refrigerant circuit parts (check valve block assemblies, four-way valves, solenoid valves, and LEVs)
- Be sure to perform non-oxidized brazing.
- Before heating the pipes, wrap the refrigerant circuit components with a wet towel to keep the temperature of the components from rising above 120°C.
- After brazing is done, check that the brazing is done properly and check for leaks before vacuum-drying the pipes.
- Direct the brazing torch flame away from the wiring and sheet metals inside the unit not to damage them.
- Wet felt sheets listed below (or its equivalent), and place them around the areas to be brazed to protect the heat exchanger, pipes, and pipe covers from being damaged from the brazing torch flame.
  Recommended felt sheets: Spatter felt 50CF-11 (5t x 1 m x 1 m) by TRUSCO Nakayama
  Felt sheets that meet the JIS standard (JIS A 1323 type A "Flame retardant testing method for spark droplets of welding and gas cutting on fabric sheets in construction works")

Check valve block replacement procedure

(9) Remove the braze at the three areas circled in the figure to remove LEV9 assembly. (See Figure 9.)

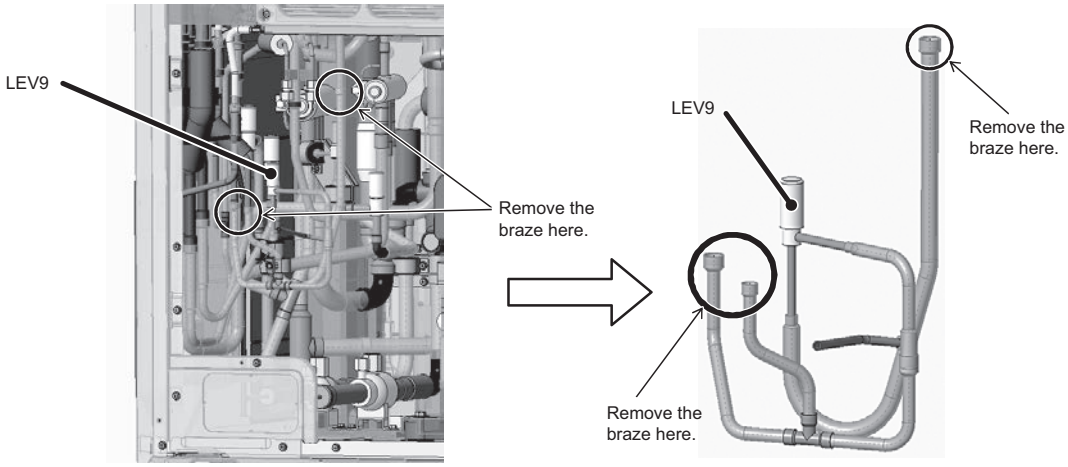

Figure 9 LEV9 assembly

(10) Remove the braze at the two areas circled in Figure 10 to remove SV2 assembly. (See Figure 10.)

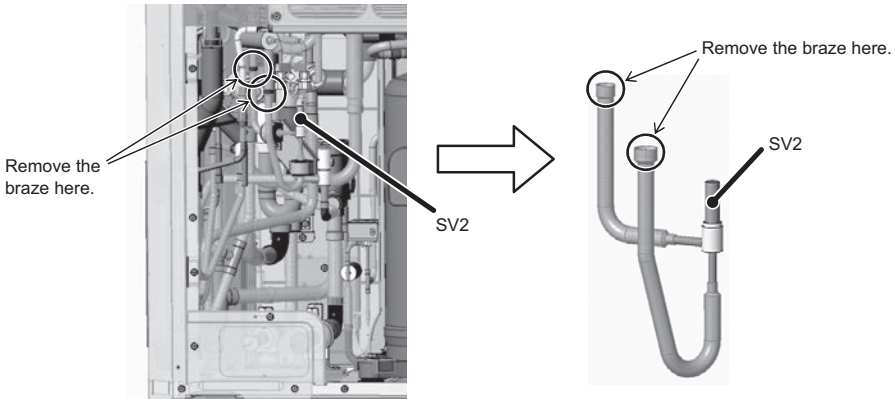

Figure 10

SV2 assembly

(11) Cut the pipe with a pipe cutter at the area shown in Figure 11. (EP72, 96, 120, and 144 only.)
Remove the braze at the area circled in Figure 11 to remove LEV4 assembly. (See Figure 11.)

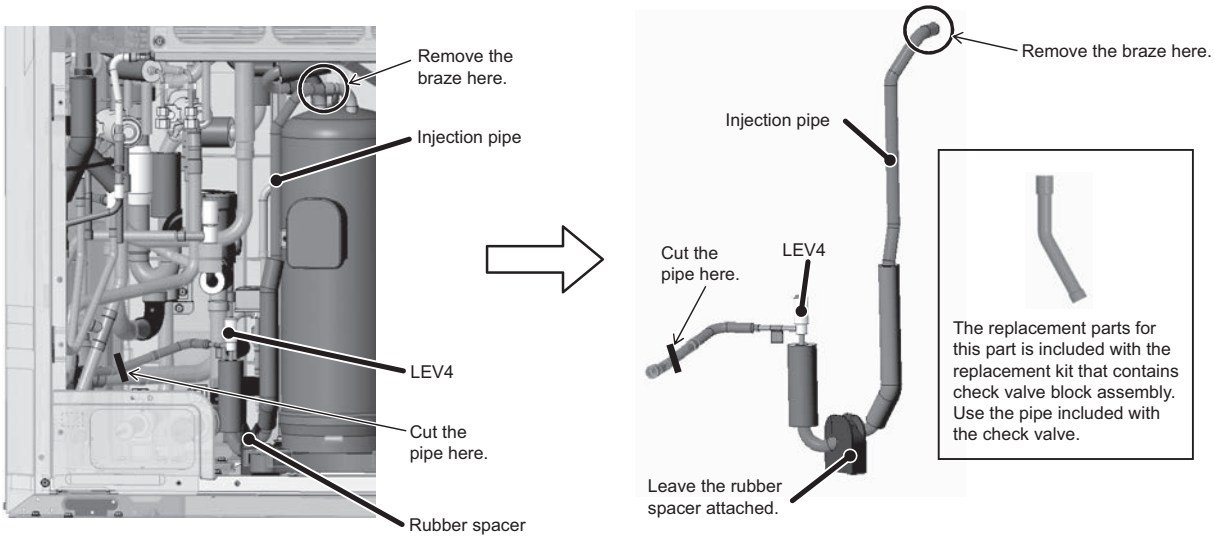

Figure 11

LEV4 assembly

(12) Remove the braze at the three areas circled in Figure 12 to remove LEV2a and 2b assembly. (See Figure 12.)

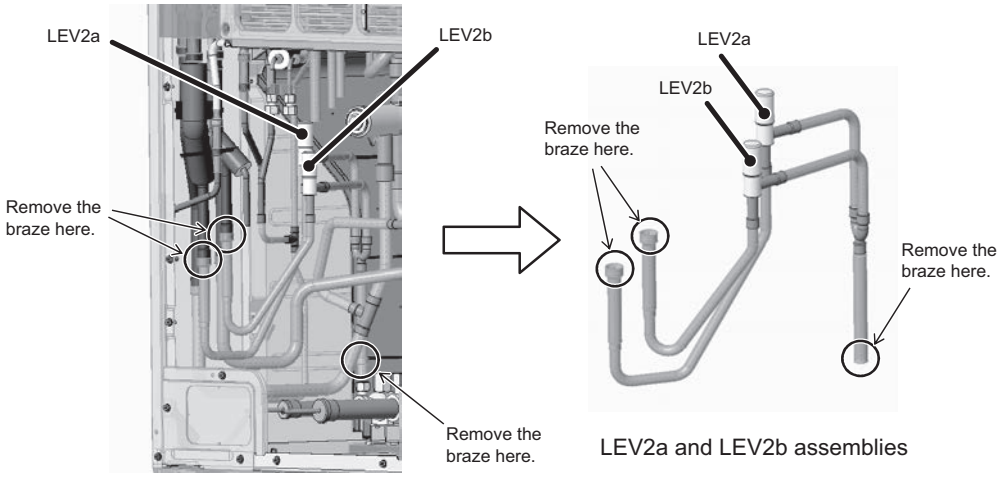

Figure 12

(13) There are two types (A and B) of gas-liquid separators that connect to the check valve block as shown below.
The removal procedure depends on the type of gas-liquid separator. Follow the appropriate procedure that corresponds to the gas-liquid separator type.
Removal procedures for gas-liquid separators A and B are explained separately below.

Gas-liquid separator A

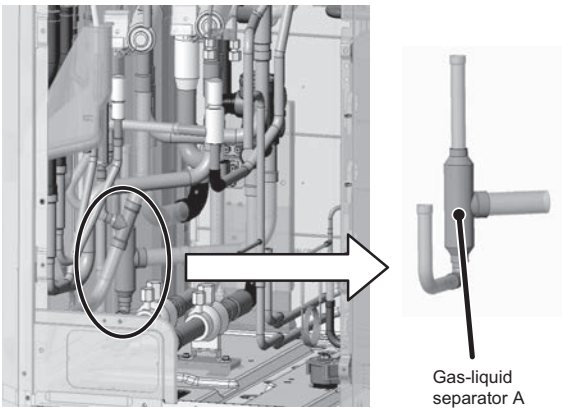

Figure 13-1

Gas-liquid separator B

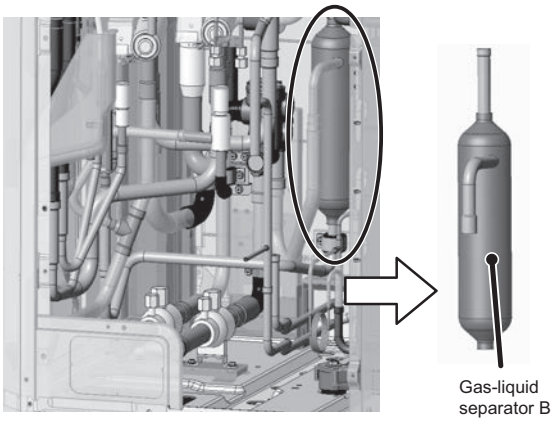

Figure 13-2

(14) Cut the pipe below four-way valves (21S4a and 21S4b) with a pipe cutter as shown in the figure. Remove the braze at the areas circled in the figure to remove 21S4a and 21S4b assemblies.

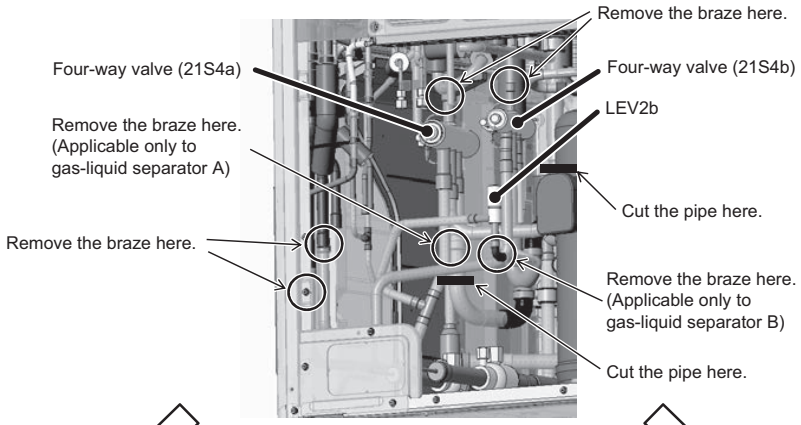

Figure 14

Gas-liquid separator A (2 areas to be cut. 5 areas to remove braze from. See Figure 14-1.)

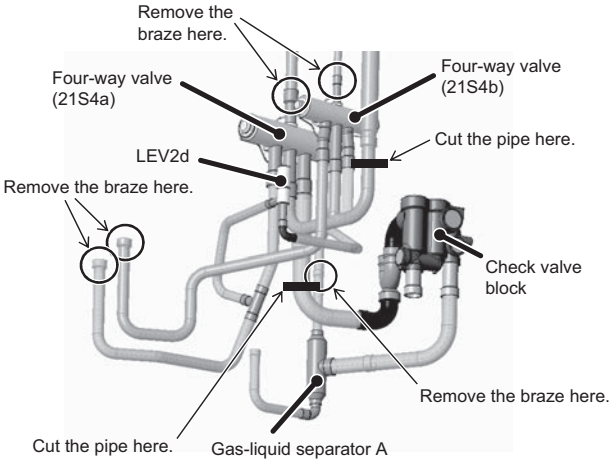

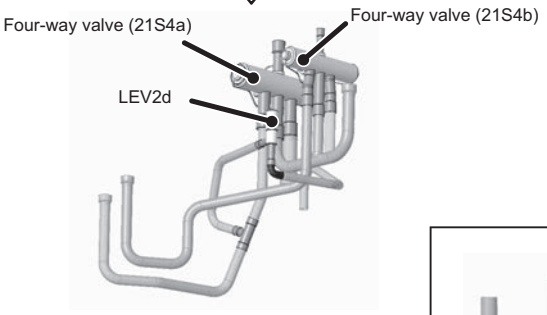

Four-way valve (21S4a and 21S4b) assemblies

Figure 14-1

Gas-liquid separator B (2 areas to be cut. 5 areas to remove braze from. See Figure 14-2.)

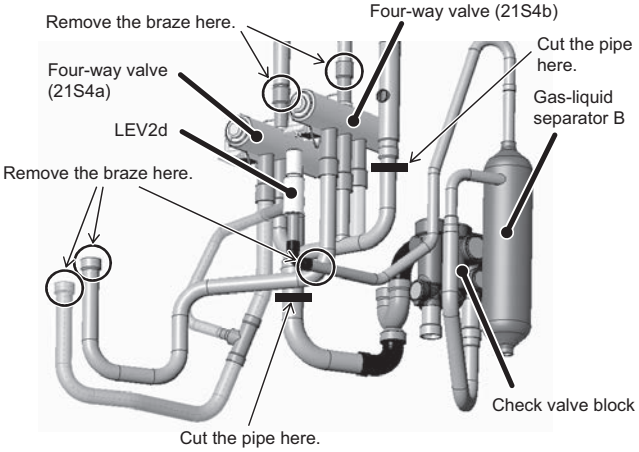

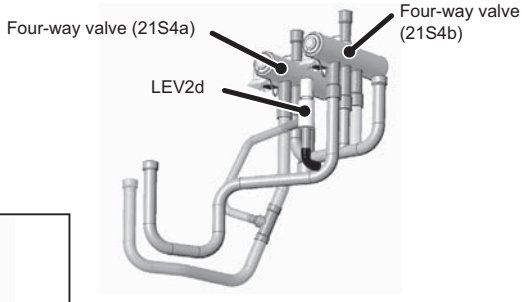

Four-way valve (21S4a and 21S4b) assemblies

Figure 14-2

The replacement parts for this part is included with the replacement kit that contains check valve block assembly. Use the pipe included with the check valve. (Applicable to both gas-liquid separators A and B)

(15) Remove the braze from the pipe where circled in the figure, and unscrew the two screws on the check valve block fixing plate to remove the check valve block assembly.

Gas-liquid separator A (2 areas to remove braze from. 2 screws to be removed. See Figure 15-1.)

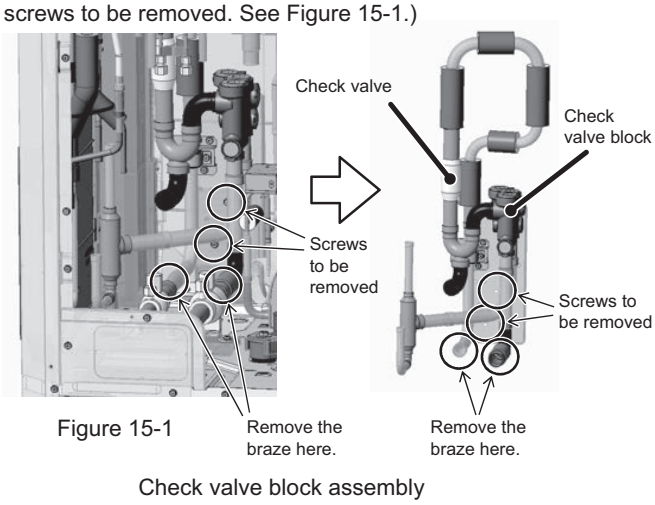

Figure 15-1

Gas-liquid separator B
(1 area to be cut. 2 areas to remove braze from. 3 screws to be removed. See Figure 15-2.)

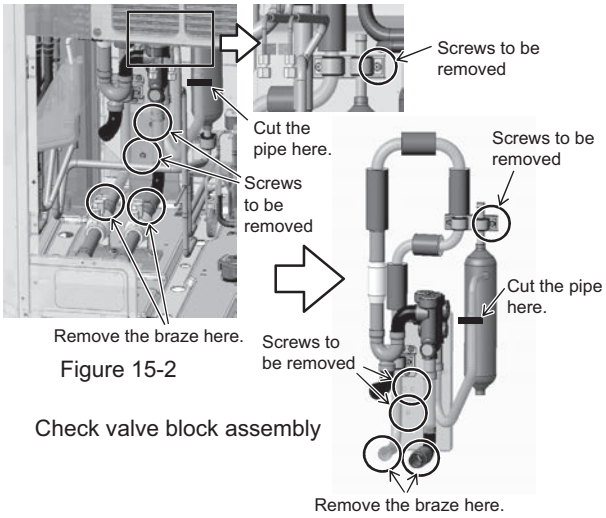

Figure 15-2

(16) Remove the braze from the pipe that connects to the gas-liquid separator (where circled in the figure), remove the two screws on the check valve block fixing plate, and replace the check valve block assembly with a new one.

Gas-liquid separator A (1 area to remove braze from. 2 screws to be removed. 1 area to be brazed. See Figure 16-1.)

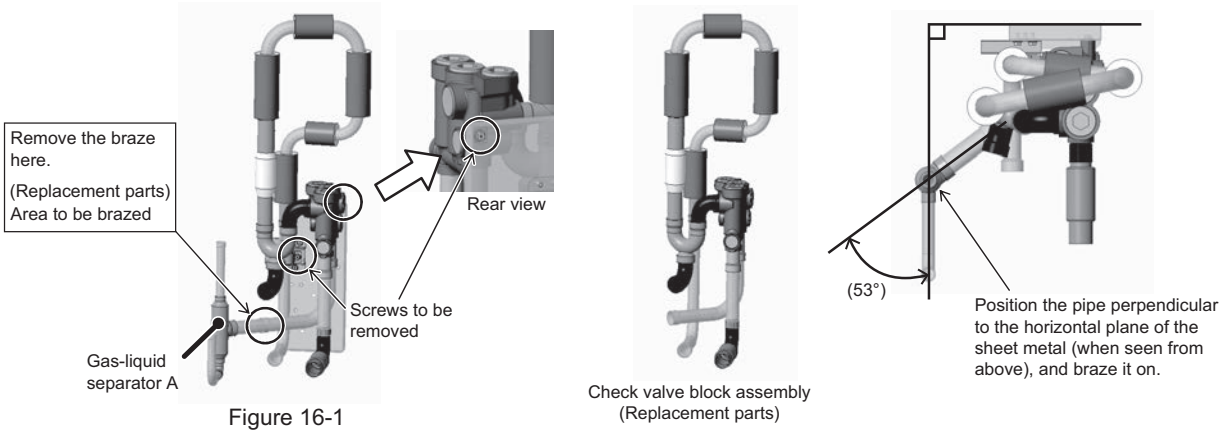

Figure 16-1

Gas-liquid separator B (3 screws. See Figure 16-2.)

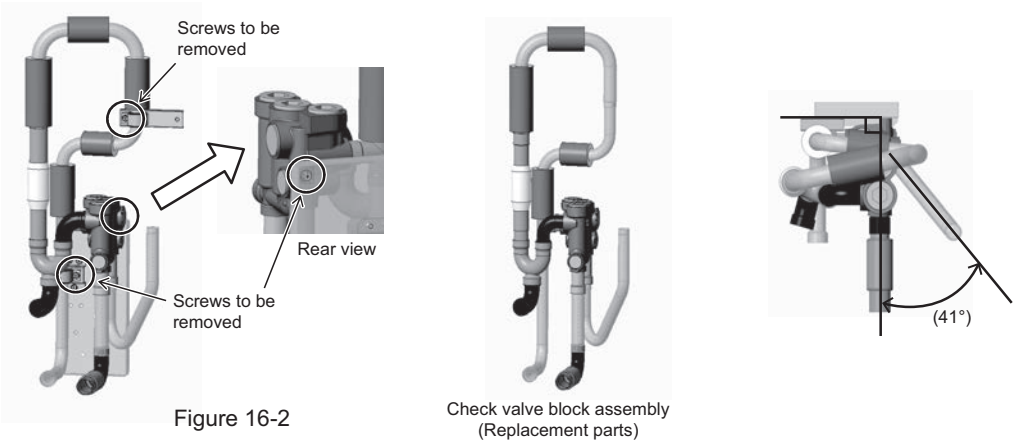

Figure 16-2

(17) Re-place the four-way valves (21S4a and 21S4b) that were removed in step (14). Figure 17-1 shows how to position a new four-way valves.
Replace the center pipe below four-way valves (21S4a and 21S4b). (3 areas to remove braze from. 2 areas to be brazed. See Figure 17-2.)

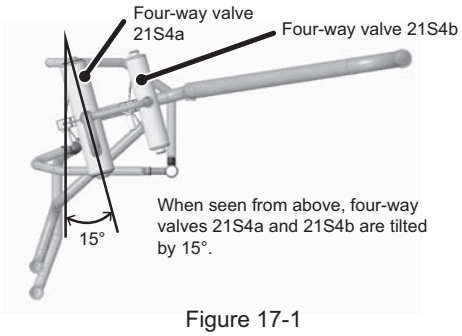

Figure 17-1

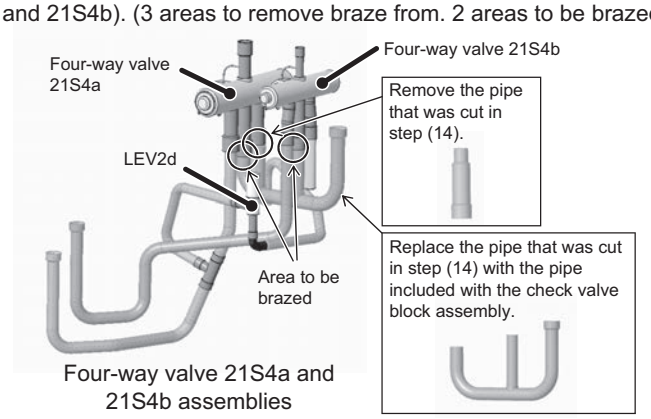

Four-way valve 21S4a and 21S4b assemblies
Figure 17-2

(18) To make it easier to connect four-way valves (21S4a and 21S4b), cut the pipes above four-way valves (21S4a and 21S4b) with a pipe cutter. Cut the pipe with an expanded end that is included with the check valve block assembly to the same length as the pipe that was removed from the on-site pipe. (See Figure 18.)

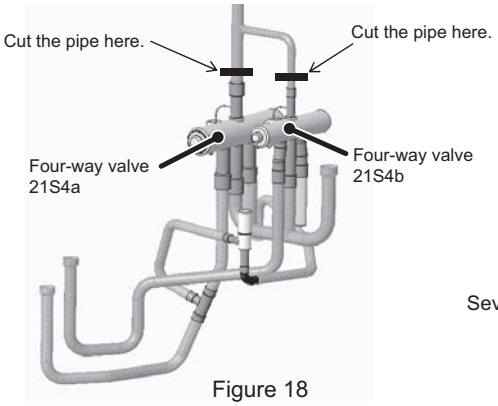

Figure 18

Four-way valve (21S4a)	Four-way valve (21S4b)
<S module>	<S module>
Pipe diameter: φ19.05	Pipe diameter: φ12.7
ID of the pipe with an extended end: φ19.05	ID of the pipe with an extended end: φ12.7
<L module>	<L module>
Pipe diameter: φ19.05	Pipe diameter: φ19.05
ID of the pipe with an extended end: φ22.2	ID of the pipe with an extended end: φ19.05

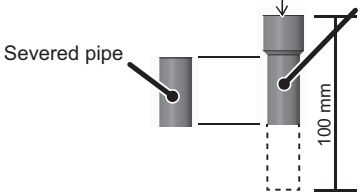

Cut the pipe with an expanded end that is included with the check valve block assembly so that the section of the pipe excluding the extended end will be the same length as the pipe that was removed from the on-site pipe.

*The included pipe with an expanded end is 100 mm long. Cut it to the appropriate length.

(19) Re-place the check valve block assembly that was replaced in step (16).

Gas-liquid separator A (2 areas to be brazed. 2 screws. See Figure 19-1.)

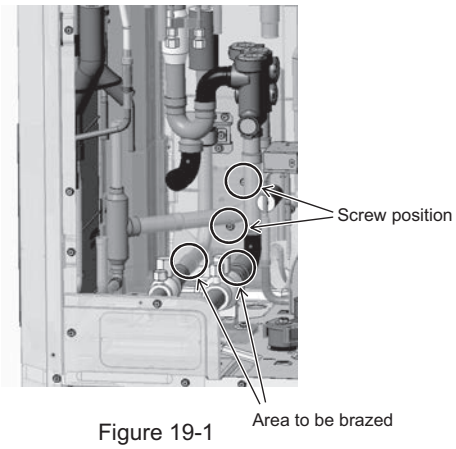

Figure 19-1

Gas-liquid separator B (3 areas to be brazed. 3 screws. See Figure 19-2.)

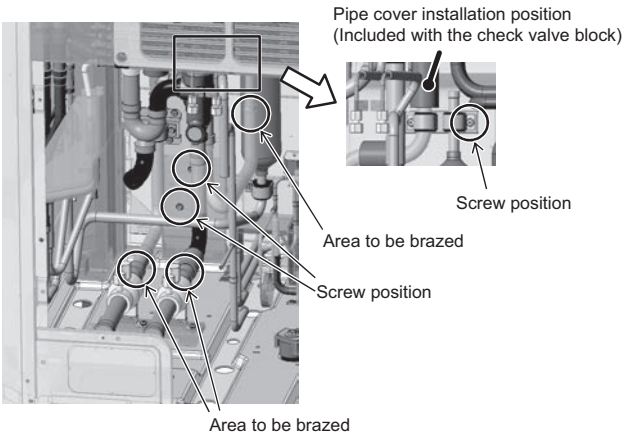

Figure 19-2

(20) Re-place the check valve assemblies (21S4a and 21S4b) whose pipes were replaced in step (17).

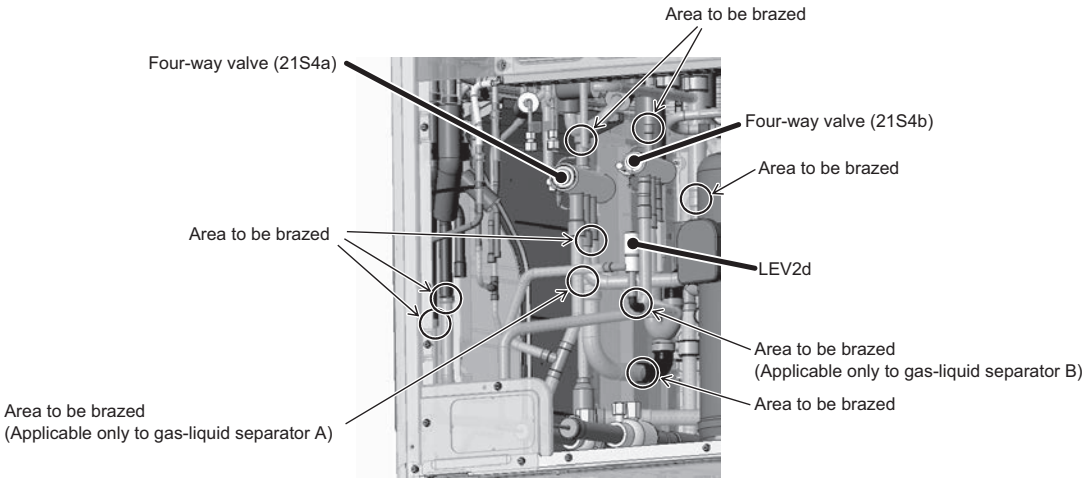

Figure 20

Gas-liquid separator A (8 areas to be brazed. See Figure 20-1.)

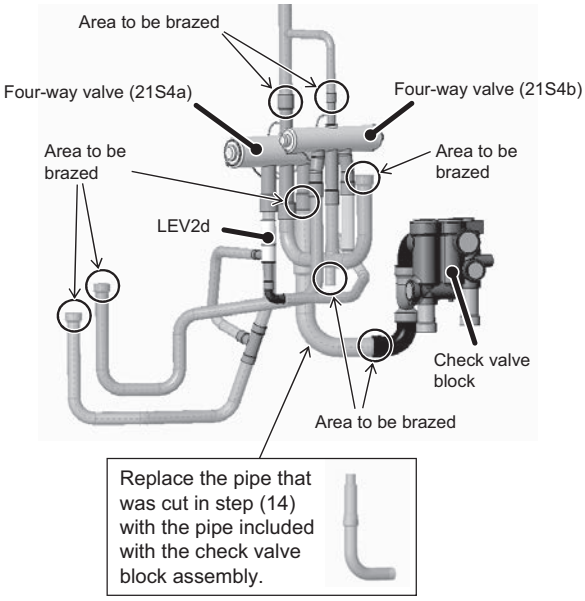

Figure 20-1

Gas-liquid separator B (8 areas to be brazed. See Figure 20-2.)

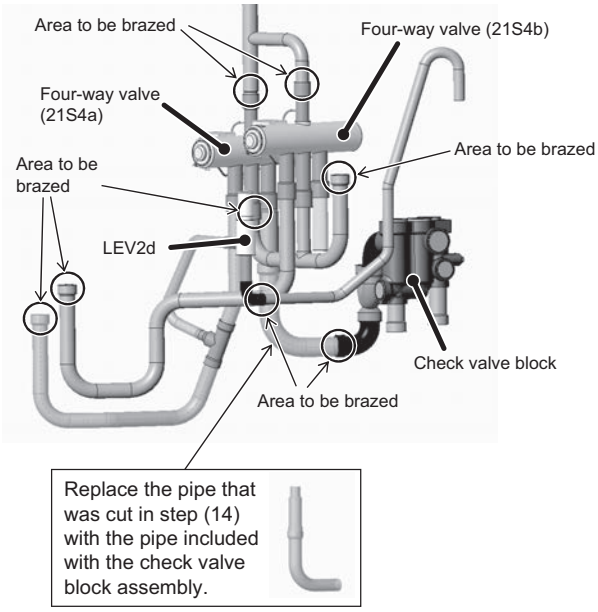

Figure 20-2

(21) Re-place the LEV4 assembly that was removed in step (11) as it was. (3 areas to be brazed. See Figure 21.) (EP72, 96, 120, and 144 only.)

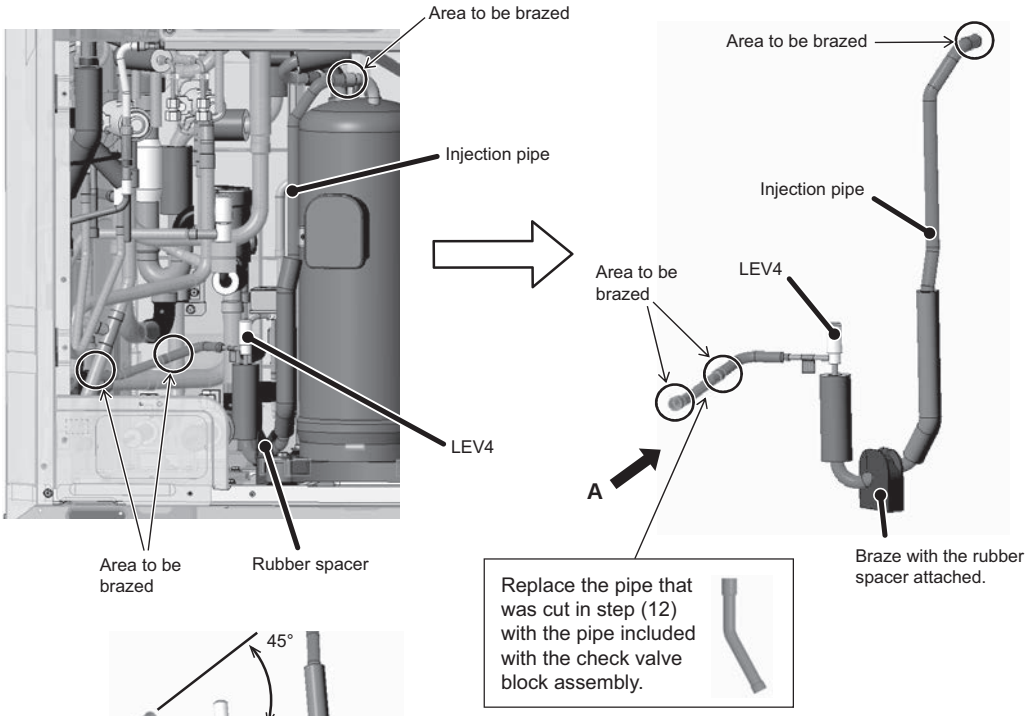

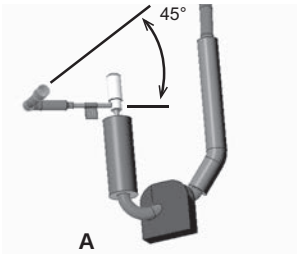

Figure 21

(22) Re-place the components that were removed as they were. This step completes the check valve block assembly replacement procedure.

2. XL-module

Explained below is the procedure for replacing the check valves. (See Figure 1.)

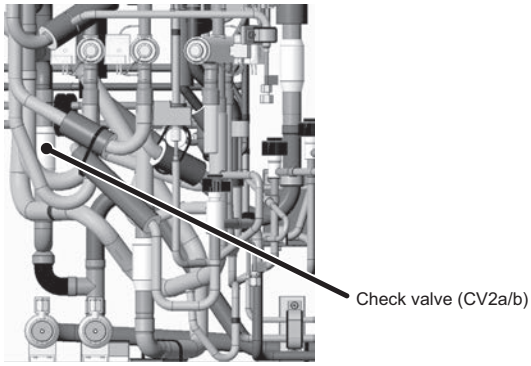

Figure 1

(1) Remove three pipe covers. (See Figure 2.)

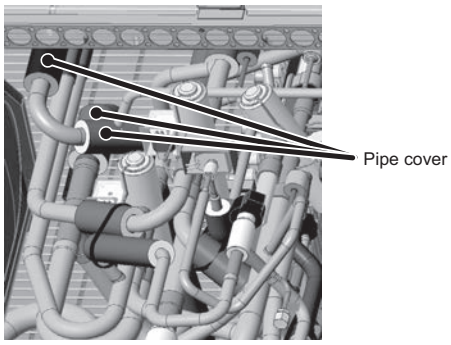

Figure 2

(2) Cut the pipe near the check valve in two areas where circled. (See Figure 3.)

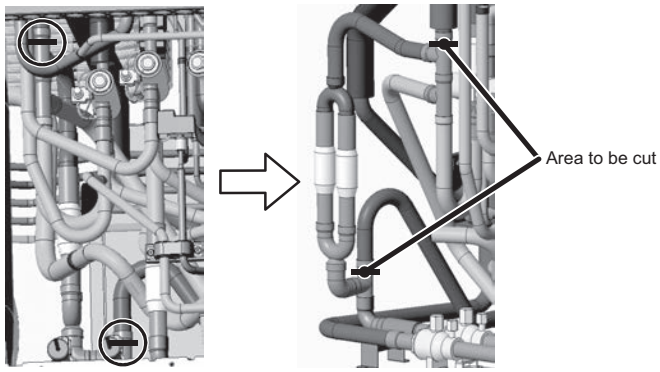

Figure 3

*Notes on replacing refrigerant circuit parts (check valve block assemblies, four-way valves, solenoid valves, and LEVs)
- Be sure to perform non-oxidized brazing.
- Before heating the pipes, wrap the refrigerant circuit components with a wet towel to keep the temperature of the components from rising above 120°C.
- After brazing is done, check that the brazing is done properly and check for leaks before vacuum-drying the pipes.
- Direct the brazing torch flame away from the wiring and sheet metals inside the unit not to damage them.
- Wet felt sheets listed below (or its equivalent), and place them around the areas to be brazed to protect the heat exchanger, pipes, and pipe covers from being damaged from the brazing torch flame.
  Recommended felt sheets: Spatter felt 50CF-11 (5t x 1 m x 1 m) by TRUSCO Nakayama
  Felt sheets that meet the JIS standard (JIS A 1323 type A "Flame retardant testing method for spark droplets of welding and gas cutting on fabric sheets in construction works")

(3) Remove the braze from the pipe where circled in the figure. (See Figure 4.)

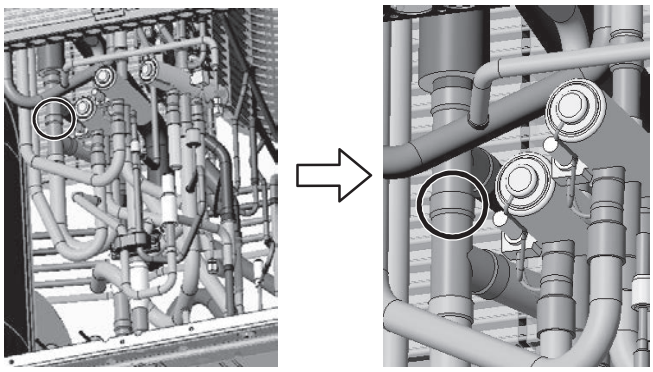

Figure 4

(4) Remove the braze from the pipe where circled in the figure. (See Figure 5.)

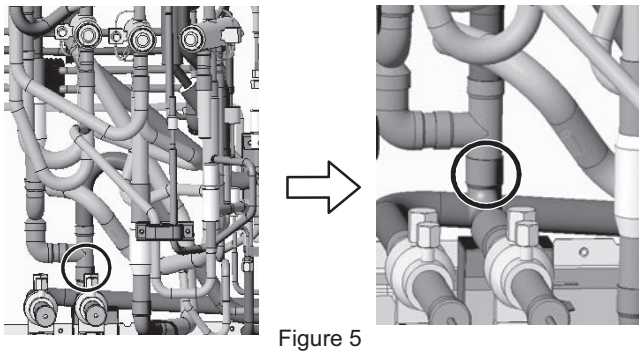

Figure 5

(5) Remove the check valve assembly (CV2a/b) from the area indicated in Figure 6.

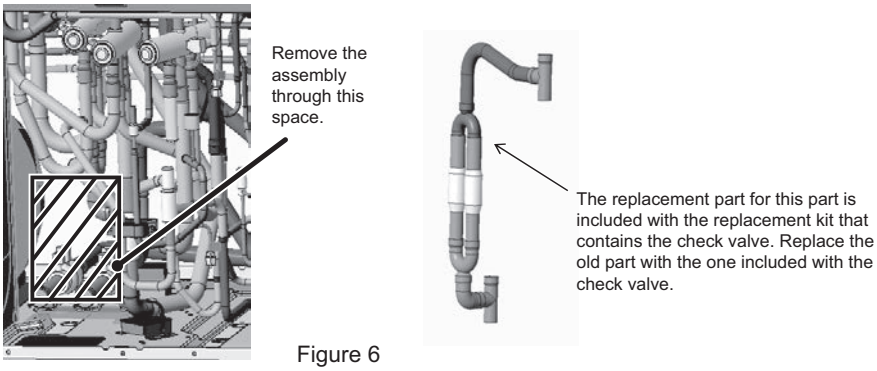

Figure 6

(6) Braze the replacement parts at four areas. (See Figure 7.)

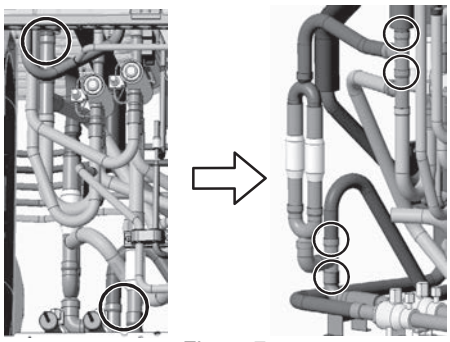

Figure 7

This step completes the check valve replacement procedure. Re-place the components that were removed as they were.

3. EXL-module

Explained below is the procedure for replacing the check valves. (See Figure 1.)

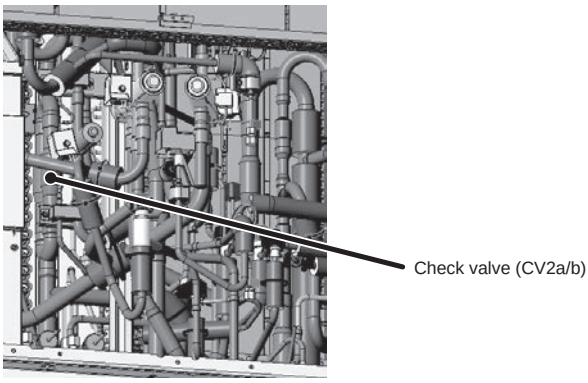

Figure 1

(1) Remove the pipe cover. (See Figure 2.)

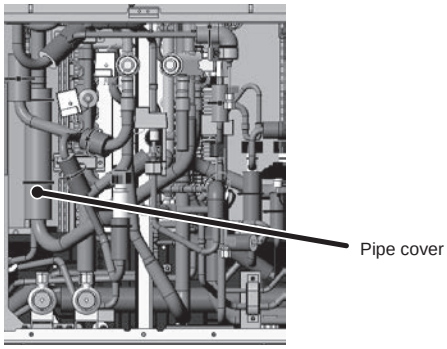

Figure 2

(2) Cut the pipe at the location adjacent to the check valve (where indicated in the figure). (See Figure 3.)

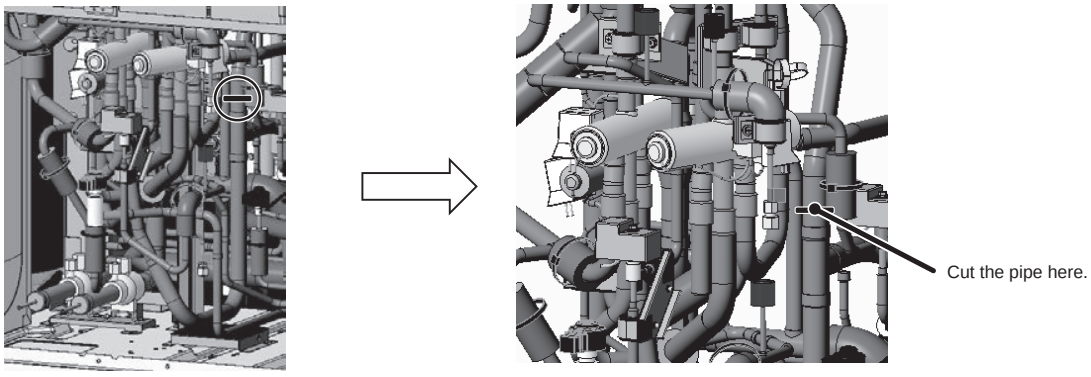

Figure 3

*Notes on replacing refrigerant circuit parts (check valve block assemblies, four-way valves, solenoid valves, and LEVs)
- Be sure to perform non-oxidized brazing.
- Before heating the pipes, wrap the refrigerant circuit components with a wet towel to keep the temperature of the components from rising above 120°C.
- After brazing is done, check that the brazing is done properly and check for leaks before vacuum-drying the pipes.
- Direct the brazing torch flame away from the wiring and sheet metals inside the unit not to damage them.
- Wet felt sheets listed below (or its equivalent), and place them around the areas to be brazed to protect the heat exchanger, pipes, and pipe covers from being damaged from the brazing torch flame.
  Recommended felt sheets: Spatter felt 50CF-11 (5t x 1 m x 1 m) by TRUSCO Nakayama
  Felt sheets that meet the JIS standard (JIS A 1323 type A "Flame retardant testing method for spark droplets of welding and gas cutting on fabric sheets in construction works")

(3) Remove the braze from the area shown in the figure. (See Figure 4.)

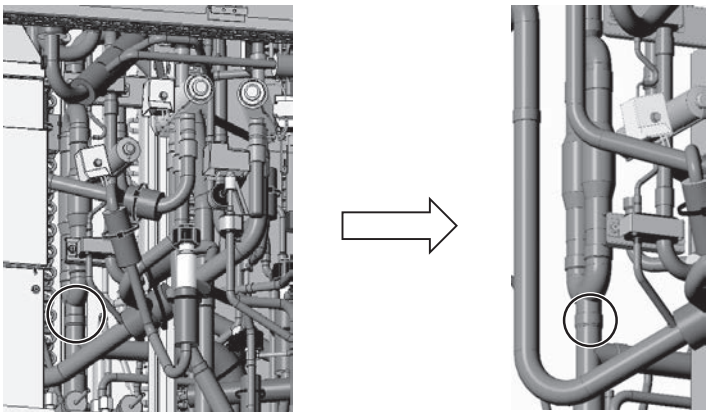

Figure 4

(4) Remove the check valve assembly (CV2a/b) from the area indicated in Figure 5.

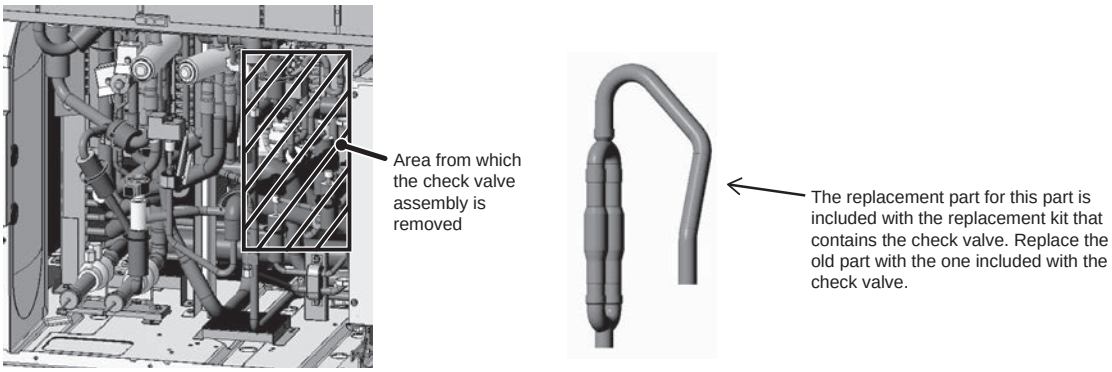

Figure 5

(5) Braze the replacement parts at the two areas. (See Figure 6.)

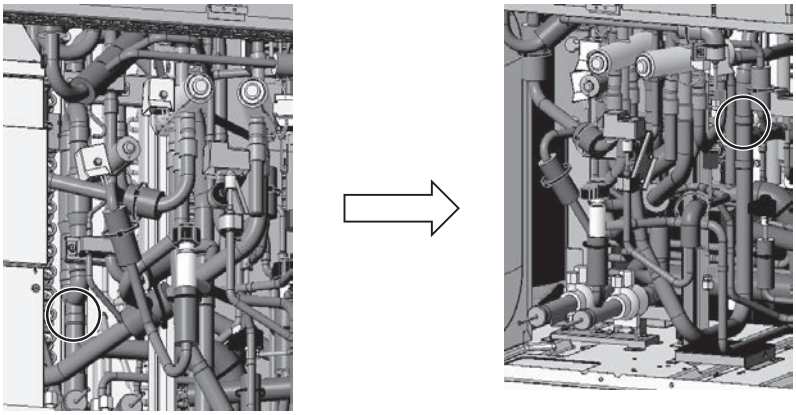

Figure 6

This step completes the check valve replacement procedure. Re-place the components that were removed as they were.

8-13-8 Compressor Replacement Procedure <Type A>

1. P72,P96T/YNU-A

Explained below are the procedures for replacing the compressor. Secure sufficient work space before starting replacement work. (See 8-13-1 Ensuring maintenance space (Preparation for the Maintenance of Refrigerant Circuit Parts) <Type A/Type A1>.)

(1) Remove the top compressor cover by unscrewing the three screws. (See Figure 1.)
Remove the compressor cover by unhooking the hooks on the back.

(2) Remove the front compressor cover by unscrewing the four screws. (See Figure 2.)

(3) Cut the two cable ties holding TH4 and TH15, and remove the wiring from the rubber bush on the left compressor cover. (See Figure 3.)

(4) Remove the right and left compressor covers by unscrewing the four screws. (See Figure 4.)

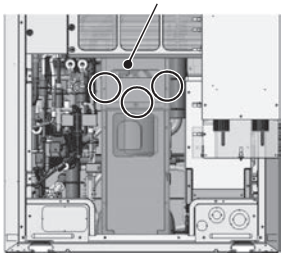

Figure 1

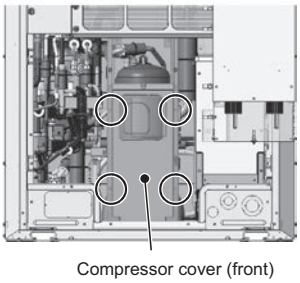

Figure 2

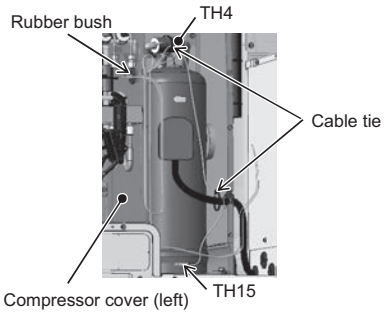

Figure 3

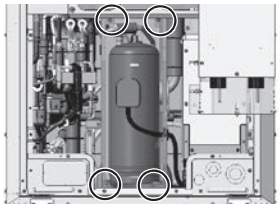
Figure 4

(5) Remove thermal insulation 1 and thermal insulation 2. (See Figure 5.)

(6) Remove the inverter cooling duct by unscrewing the screw. (See Figure 6. Applicable to the S-module only)

(7) Remove the pipe cover and the damper, and cut the suction pipe where indicated in Figure 7.
*When re-placing the pipe cover and the dumper, use the ones with the sizes shown in Figure 7, which are supplied with the replacement compressor.

(8) Remove the compressor discharge pipe by cutting the pipe where indicated in Figure 8 or by removing the braze.

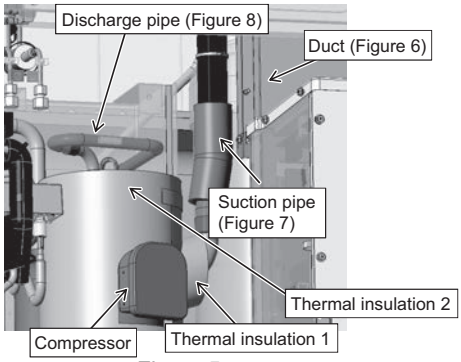

Figure 5

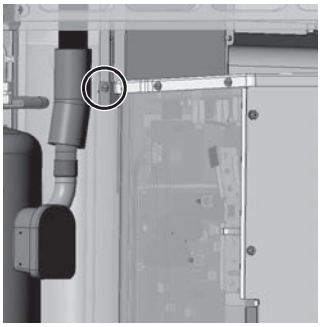
Figure 6

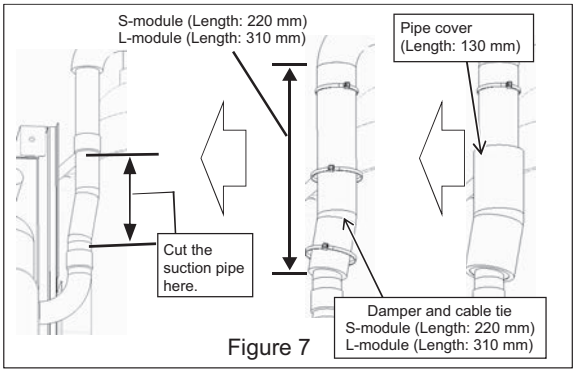

Figure 7

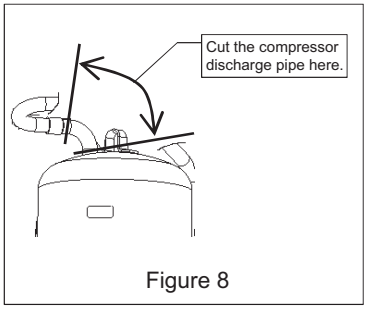

Figure 8

(9) Remove the four bolts holding the compressor down. (See Figure 9.)
The two bolts in the front are also holding down the metal sheets.

(10) Tilting the compressor will cause the refrigerant oil to leak. Seal the pipe where it was cut or removed at the brazed section.

(11) After replacing the compressor, perform brazing using a wet recommended felt sheet. Use caution not to damage the control box, ACC, compressor cover, or damper. (See Figure 10.)

*Precautions for replacing the compressor
· Be sure to perform non-oxidized brazing.
· Before heating the pipes, wrap the refrigerant circuit components with a wet towel to keep the temperature of the components from rising above 120°C.
· After brazing is done, check that the brazing is done properly and check for leaks before vacuum-drying the pipes.
· Direct the brazing torch flame away from the wiring and sheet metals inside the unit not to damage them.
· Wet felt sheets listed below (or its equivalent), and place them around the areas to be brazed to protect the heat exchanger, pipes, and pipe covers from being damaged from the brazing torch flame.
Recommended felt sheets: Spatter felt 50CF-11 (5t x 1 m x 1 m) by TRUSCO Nakayama
Felt sheets that meet the JIS standard (JIS A 1323 type A "Flame retardant testing method for spark droplets of welding and gas cutting on fabric sheets in construction works")

(12) The recommended tightening torque for the compressor fixing bolts is 3.0 N·m. Fasten the bolts using a torque wrench or other tool that can apply the specified torque.

(13) Re-place the compressor covers in the reverse order as they were removed.
*Hold the TH15 wiring in place with the bands to keep the wiring from coming in contact with insulation 2. (See Figures 3 and 5.)

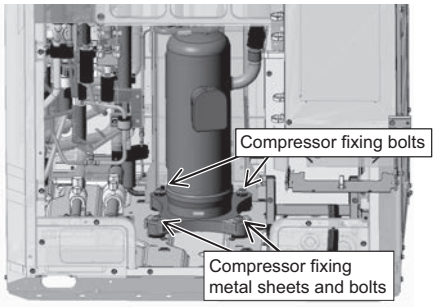

Figure 9

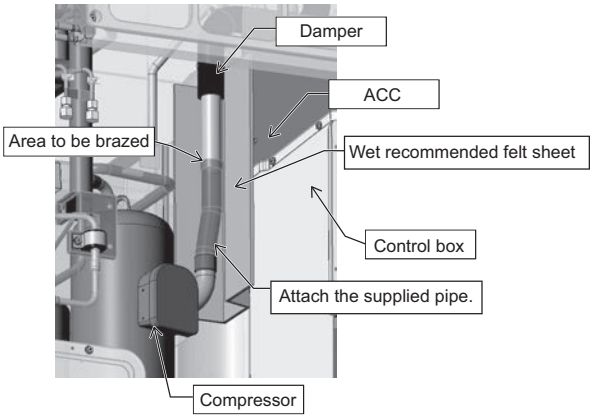

Figure 10

Note
- After replacing the compressor, set SW4 (832) and (958) to “ON” before conducting a test run.
- After the test run has completed, set SW4 (832) and (958) to “OFF.”

2. P120,P144T/YNU-A

Explained below are the procedures for replacing the compressor. Secure sufficient work space before starting replacement work. (See 8-13-1 Ensuring maintenance space (Preparation for the Maintenance of Refrigerant Circuit Parts) <Type A/Type A1>.)

(1) Remove the top compressor cover by unscrewing the three screws. (See Figure 1.)
Remove the compressor cover by unhooking the hooks on the back.

(2) Remove the front compressor cover by unscrewing the four screws. (See Figure 2.)

(3) Cut the two cable ties holding TH4 and TH15, and remove the wiring from the rubber bush on the left compressor cover. (See Figure 3.)

(4) Remove the right and left compressor covers by unscrewing the four screws. (See Figure 4.)

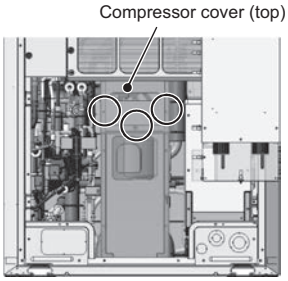

Figure 1

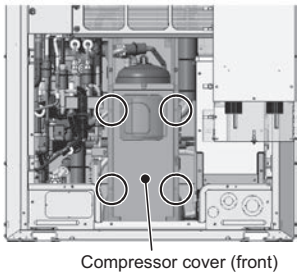

Figure 2

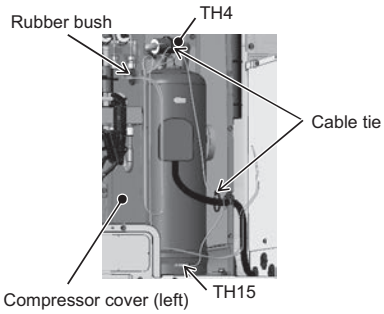

Figure 3

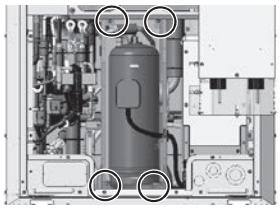
Figure 4

(5) Remove thermal insulation 1 and thermal insulation 2. (See Figure 5.)

(6) Remove the pipe cover and the damper, and cut the suction pipe where indicated in Figure 6.
*When re-placing the pipe cover and the dumper, use the ones with the sizes shown in Figure 6, which are supplied with the replacement compressor.

(7) Remove the compressor discharge pipe by cutting the pipe where indicated in Figure 7 or by removing the braze.

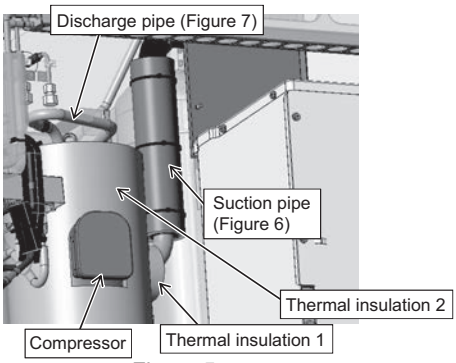

Figure 5

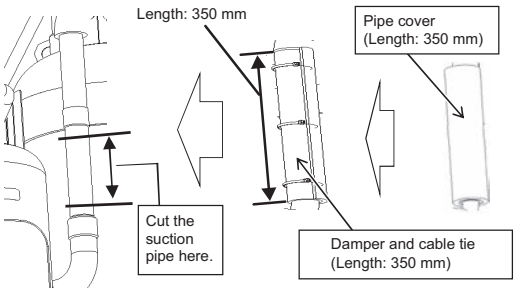

Figure 6

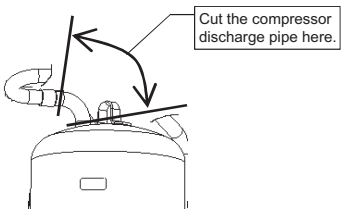

Figure 7

(8) Remove the four bolts holding the compressor down. (See Figure 8.)
The two bolts in the front are also holding down the metal sheets.
(9) Tilting the compressor will cause the refrigerant oil to leak. Seal the pipe where it was cut or removed at the brazed section.
(10) After replacing the compressor, perform brazing using a wet recommended felt sheet. Use caution not to damage the control box, ACC, compressor cover, or damper. (See Figure 9.)

*Precautions for replacing the compressor
· Be sure to perform non-oxidized brazing.
· Before heating the pipes, wrap the refrigerant circuit components with a wet towel to keep the temperature of the components from rising above 120°C.
· After brazing is done, check that the brazing is done properly and check for leaks before vacuum-drying the pipes.
· Direct the brazing torch flame away from the wiring and sheet metals inside the unit not to damage them.
· Wet felt sheets listed below (or its equivalent), and place them around the areas to be brazed to protect the heat exchanger, pipes, and pipe covers from being damaged from the brazing torch flame.
Recommended felt sheets: Spatter felt 50CF-11 (5t x 1 m x 1 m) by TRUSCO Nakayama
Felt sheets that meet the JIS standard (JIS A 1323 type A "Flame retardant testing method for spark droplets of welding and gas cutting on fabric sheets in construction works")

(11) The recommended tightening torque for the compressor fixing bolts is 3.0 N·m. Fasten the bolts using a torque wrench or other tool that can apply the specified torque.
(12) Re-place the compressor covers in the reverse order as they were removed.
*Hold the TH15 wiring in place with the bands to keep the wiring from coming in contact with insulation 2. (See Figures 3 and 5.)

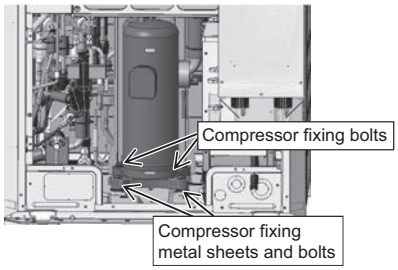

Figure 8

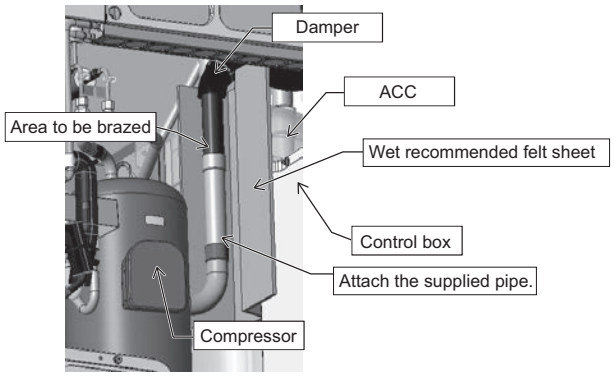

Figure 9

Note
♦After replacing the compressor, set SW4 (832) and (958) to “ON” before conducting a test run.
♦After the test run has completed, set SW4 (832) and (958) to “OFF.”

3. EP72,EP96,EP120,EP144T/YNU-A

Explained below are the procedures for replacing the compressor. Secure sufficient work space before starting replacement work. (See 8-13-1 Ensuring maintenance space (Preparation for the Maintenance of Refrigerant Circuit Parts) <Type A/Type A1>.)

(1) Remove the top compressor cover by unscrewing the three screws. (See Figure 1.)
Remove the compressor cover by unhooking the hooks on the back.
(2) Remove the front compressor cover by unscrewing the four screws. (See Figure 2.)
(3) Cut the two cable ties holding TH4 and TH15, and remove the wiring from the rubber bush on the left compressor cover. (See Figure 3.)
(4) Remove the right and left compressor covers by unscrewing the four screws. (See Figure 4.)
(5) Remove the saddle and the rubber spacers on the compressor by unscrewing the screw. (See Figure 5.)
(6) Remove the cover of the compressor terminal block box, mounting support metal, and the mounting plate by unscrewing the two screws. (See Figure 6.)

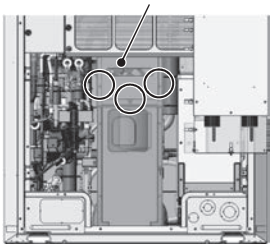

Figure 1

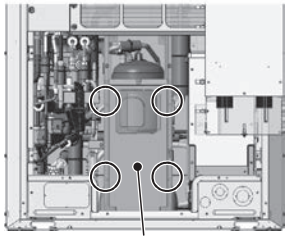

Figure 2

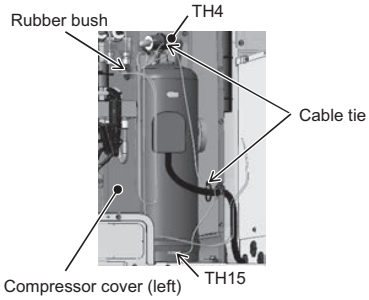

Figure 3

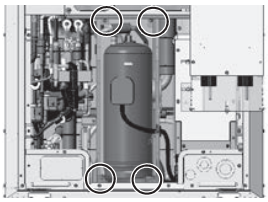
Figure 4

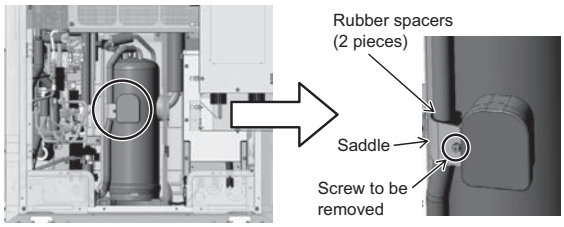

Figure 5

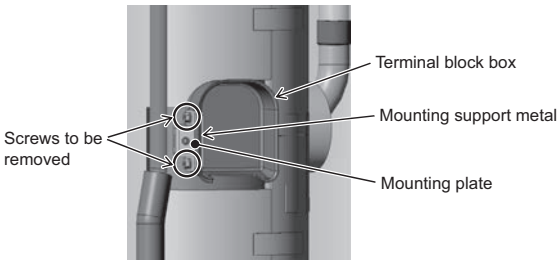

Figure 6

(7) Remove thermal insulation 1 and thermal insulation 2. (See Figure 7.)
(8) Remove the inverter cooling duct from the S module by unscrewing one screw. (See Figure 8.)

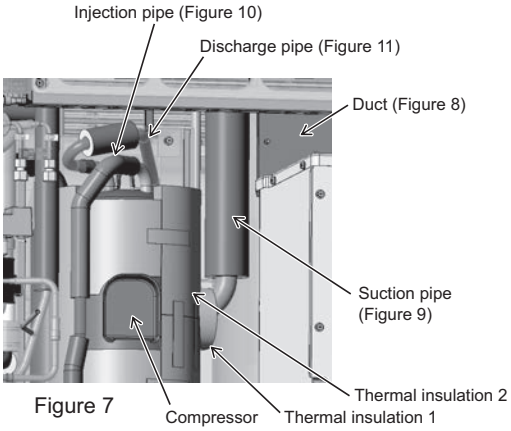

Figure 7

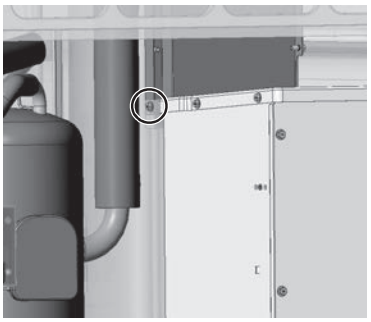
Figure 8

(9) Remove the pipe cover and the damper, and cut the suction pipe where indicated in Figure 9.
(10) Remove the pipe covers, and then remove the braze. (See Figure 10.)
* Do not force the injection pipe to deform.
(11) Remove the compressor discharge pipe by cutting the pipe where indicated in Figure 11 or by removing the braze.

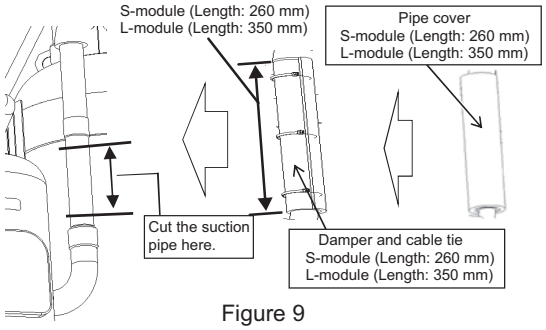

Figure 9

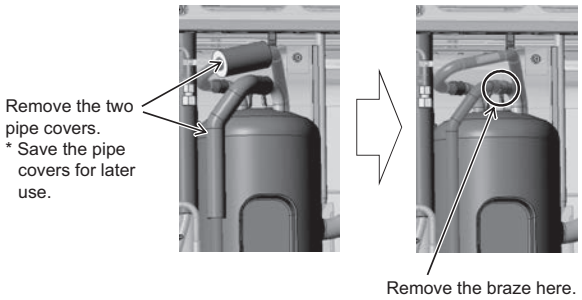

Figure 10

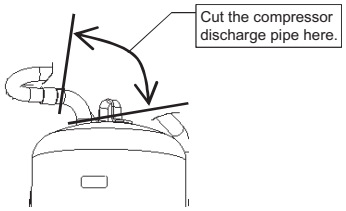

Figure 11

(12) Remove the four bolts holding the compressor down. (See Figure 12.)
The two bolts in the front are also holding down the metal sheets.
(13) Tilting the compressor will cause the refrigerant oil to leak. Seal the pipe where it was cut or removed at the brazed section.
(14) Braze the suction pipe using a wet recommended felt sheet. Use caution not to damage the control box, ACC, compressor cover, or dumper during brazing. (See Figure 13.)

*Precautions for replacing the compressor
- Be sure to perform non-oxidized brazing.
- Before heating the pipes, wrap the refrigerant circuit components with a wet towel to keep the temperature of the components from rising above 120°C.
- After brazing is done, check that the brazing is done properly and check for leaks before vacuum-drying the pipes.
- Direct the brazing torch flame away from the wiring and sheet metals inside the unit not to damage them.
- Wet felt sheets listed below (or its equivalent), and place them around the areas to be brazed to protect the heat exchanger, pipes, and pipe covers from being damaged from the brazing torch flame.
  Recommended felt sheets: Spatter felt 50CF-11 (5t x 1 m x 1 m) by TRUSCO Nakayama
  Felt sheets that meet the JIS standard (JIS A 1323 type A "Flame retardant testing method for spark droplets of welding and gas cutting on fabric sheets in construction works")

(15) The recommended tightening torque for the compressor fixing bolts is 3.0 N·m. Fasten the bolts using a torque wrench or other tool that can apply the specified torque.
(16) Re-place the compressor covers in the reverse order as they were removed.
*Hold the TH15 wiring in place with the bands to keep the wiring from coming in contact with insulation 2. (See Figures 3 and 7.)

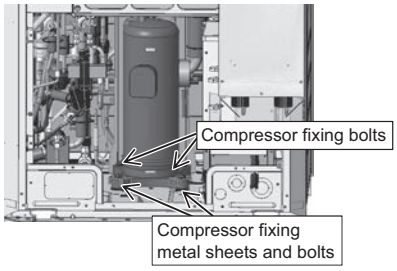

Figure 12

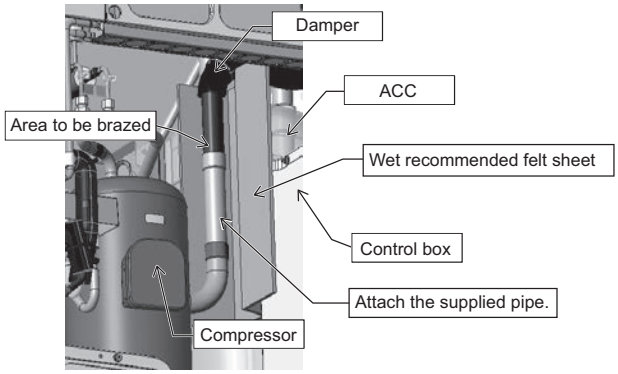

Figure 13

Note
- After replacing the compressor, set SW4 (832) and (958) to “ON” before conducting a test run.
- After the test run has completed, set SW4 (832) and (958) to “OFF.”

4. P168, EP168, EP192, EP216, EP240T/YNU-A

Explained below is the procedure for replacing the compressor. Secure sufficient work space before starting replacement work. (See 8-13-1 Ensuring maintenance space (Preparation for the Maintenance of Refrigerant Circuit Parts) <Type A/Type A1>.)

(1) Remove the front compressor cover by unscrewing the three screws. (See Figure 1.)
(2) Remove the top compressor cover by unscrewing the three screws. (See Figure 2.)
(3) Cut the two cable ties holding TH4 and TH15, and remove the wiring from the rubber bush on the right compressor cover. (See Figure 3.)
(4) Remove the right compressor cover by unscrewing the screw. (See Figure 4.)
(5) Remove the saddle and the rubber spacers from the compressor by unscrewing the screw. (See Figure 5.) (For EP models only)
(6) Remove the cover of the compressor terminal block box, mounting support metal, and the mounting plate by unscrewing the two screws. (See Figure 6.) (For EP models only)

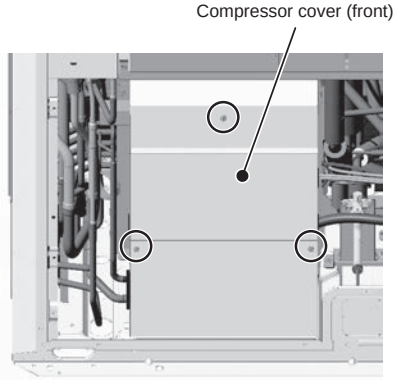

Figure 1

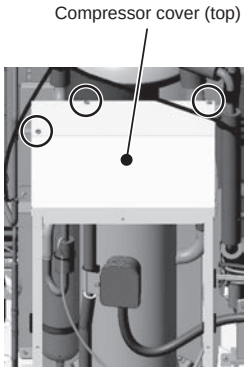

Figure 2

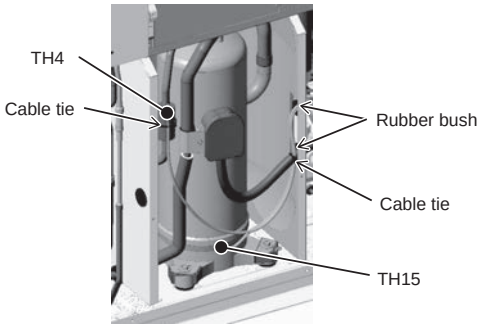

Figure 3

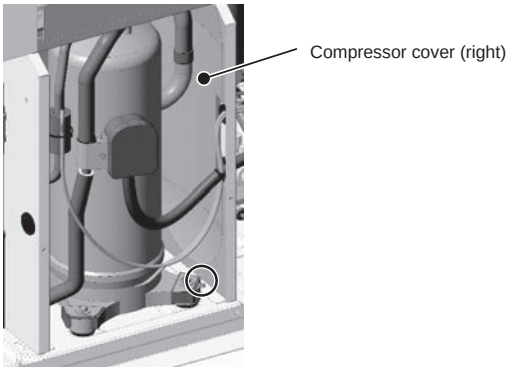

Figure 4

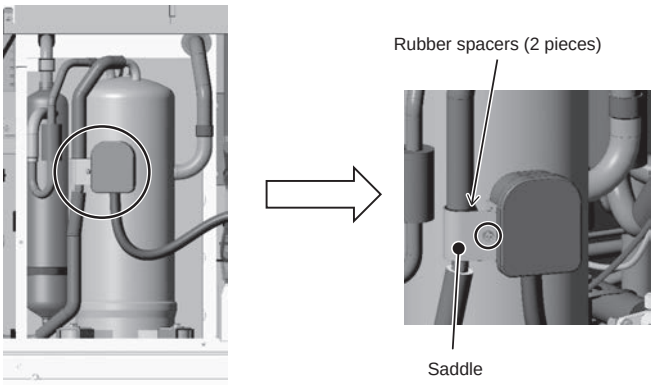

Figure 5

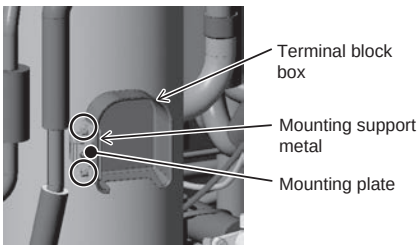

Figure 6

(7) Remove the braze from the suction pipe of the compressor. (See Figure 7.)
Remove the braze by using the recommended felt wet with water, using caution not to damage the compressor cover (rear) or damper.
(8) Remove the pipe covers, and then remove the braze. (See Figure 8.) (For EP models only)
*Do not force the injection pipe to deform.
(9) Remove the compressor discharge pipe by cutting the pipe where indicated in the figure or by removing the braze. (See Figure 9.)

Figure 7

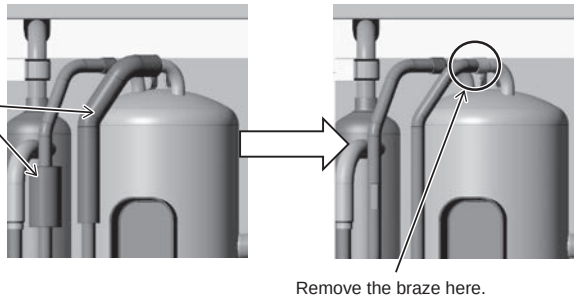

Figure 8

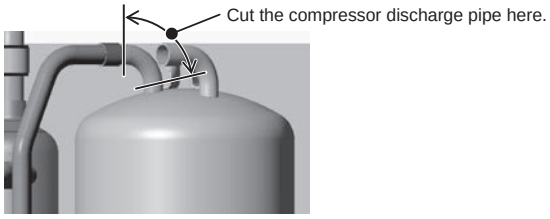

Figure 9

(10) Remove the four bolts holding the compressor down. (See Figure 10.)
Compressor fixing plate is attached to all four bolts.
(11) Tilting the compressor will cause the refrigerant oil to leak. Seal the pipe where it was cut or removed at the brazed section.
(12) Braze the suction pipe using a wet recommended felt sheet. Use caution not to damage the compressor cover (rear), or dumper during brazing.

*Precautions for replacing the compressor
- Be sure to perform non-oxidized brazing.
- Before heating the pipes, wrap the refrigerant circuit components with a wet towel to keep the temperature of the components from rising above 120°C.
- After brazing is done, check that the brazing is done properly and check for leaks before vacuum-drying the pipes.
- Direct the brazing torch flame away from the wiring and sheet metals inside the unit not to damage them.
- Wet felt sheets listed below (or its equivalent), and place them around the areas to be brazed to protect the heat exchanger, pipes, and pipe covers from being damaged from the brazing torch flame.
  Recommended felt sheets: Spatter felt 50CF-11 (5t x 1 m x 1 m) by TRUSCO Nakayama
  Felt sheets that meet the JIS standard (JIS A 1323 type A "Flame retardant testing method for spark droplets of welding and gas cutting on fabric sheets in construction works")

(13) The recommended tightening torque for the compressor fixing bolts is 3.0 N·m. Fasten the bolts using a torque wrench or other tool that can apply the specified torque.
(14) Re-place the components that were removed as they were.

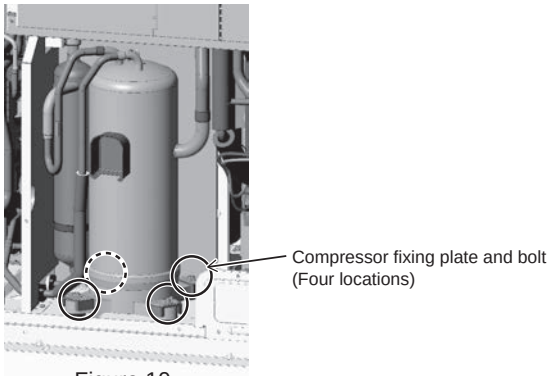

Figure 10

Note
- After replacing the compressor, set SW4 (832) and (958) to “ON” before conducting a test run.
- After the test run has completed, set SW4 (832) and (958) to “OFF.”

8-13-9 Compressor Replacement Procedure <Type A1>

1. P72,P96T/YNU-A1

Explained below are the procedures for replacing the compressor. Secure sufficient work space before starting replacement work. (See 8-13-1 Ensuring maintenance space (Preparation for the Maintenance of Refrigerant Circuit Parts) <Type A/Type A1>.)

(1) Remove the top compressor cover by unscrewing the three screws. (See Figure 1.)
Remove the compressor cover by unhooking the hooks on the back.

(2) Remove the front compressor cover by unscrewing the four screws. (See Figure 2.)

(3) Cut the two cable ties holding TH4 and TH15, and remove the wiring from the rubber bush on the left compressor cover for TH4, TH15 and the crankcase heater (CH11). (See Figure 3.)

(4) Remove the right and left compressor covers by unscrewing the four screws. (See Figure 4.)

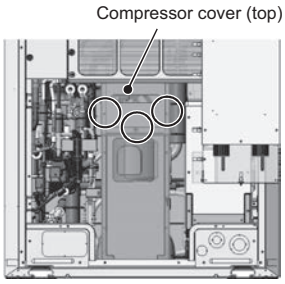

Figure 1

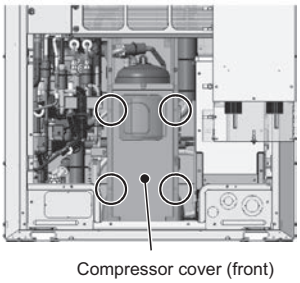

Figure 2

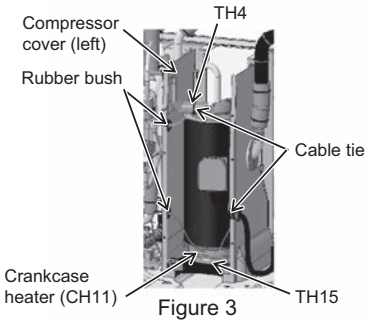

Figure 3

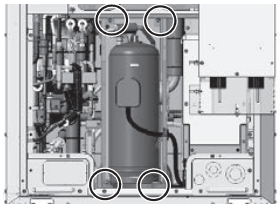
Figure 4

(5) Remove thermal insulation 1 and thermal insulation 2. (See Figure 5.)

(6) Remove the inverter cooling duct by unscrewing the screw. (See Figure 6. Applicable to the S-module only)

(7) Remove the pipe cover and the damper, and cut the suction pipe where indicated in Figure 7.
*When re-placing the pipe cover and the dumper, use the ones with the sizes shown in Figure 7, which are supplied with the replacement compressor.

(8) Remove the compressor discharge pipe by cutting the pipe where indicated in Figure 8 or by removing the braze.

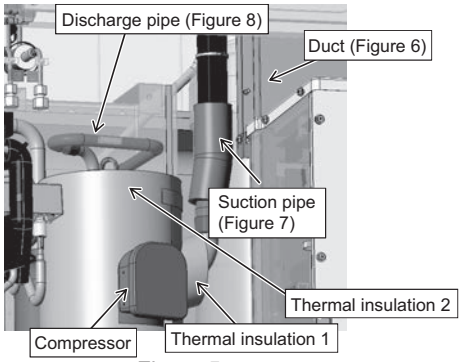

Figure 5

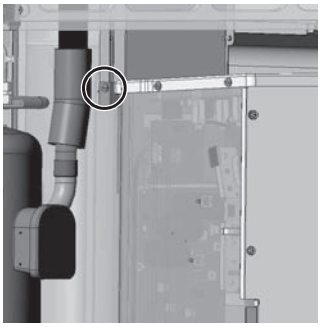
Figure 6

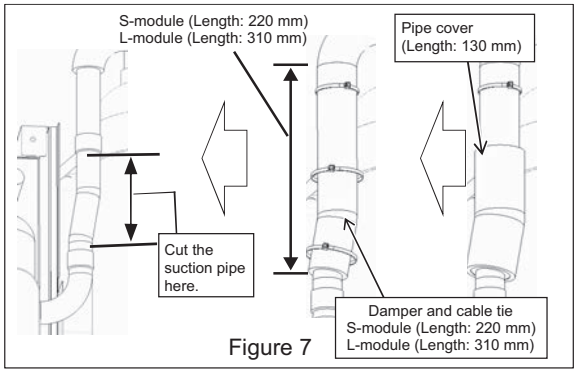

Figure 7

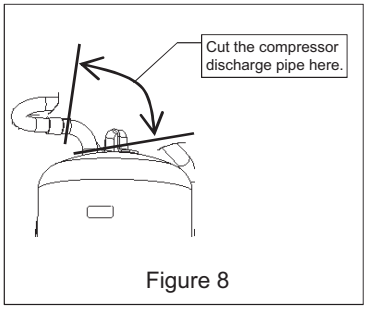

Figure 8

(9) Remove the four bolts holding the compressor down. (See Figure 9.)
The two bolts in the front are also holding down the metal sheets.

(10) Tilting the compressor will cause the refrigerant oil to leak. Seal the pipe where it was cut or removed at the brazed section.

(11) After replacing the compressor, perform brazing using a wet recommended felt sheet. Use caution not to damage the control box, ACC, compressor cover, or damper. (See Figure 10.)

*Precautions for replacing the compressor
· Be sure to perform non-oxidized brazing.
· Before heating the pipes, wrap the refrigerant circuit components with a wet towel to keep the temperature of the components from rising above 120°C.
· After brazing is done, check that the brazing is done properly and check for leaks before vacuum-drying the pipes.
· Direct the brazing torch flame away from the wiring and sheet metals inside the unit not to damage them.
· Wet felt sheets listed below (or its equivalent), and place them around the areas to be brazed to protect the heat exchanger, pipes, and pipe covers from being damaged from the brazing torch flame.
Recommended felt sheets: Spatter felt 50CF-11 (5t x 1 m x 1 m) by TRUSCO Nakayama
Felt sheets that meet the JIS standard (JIS A 1323 type A "Flame retardant testing method for spark droplets of welding and gas cutting on fabric sheets in construction works")

(12) The recommended tightening torque for the compressor fixing bolts is 3.0 N·m. Fasten the bolts using a torque wrench or other tool that can apply the specified torque.

(13) Re-place the compressor covers in the reverse order as they were removed.
* Hold the TH15 and Crankcase heater (CH11) wirings using cable ties so that it does not come into contact with thermal insulation 2. (See Figures 3 and 5.)

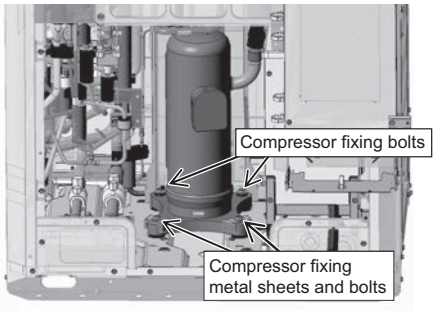

Figure 9

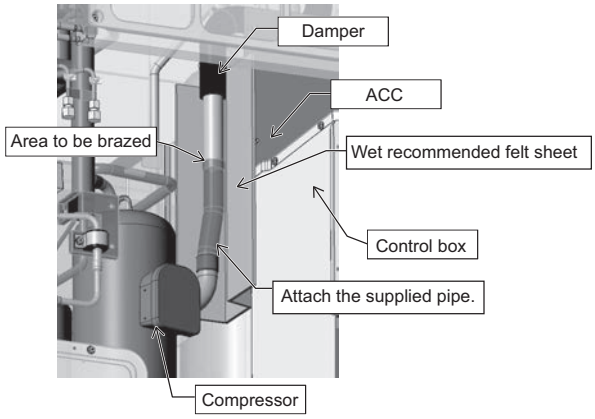

Figure 10

Note
♦After replacing the compressor, set SW4 (832) and (958) to “ON” before conducting a test run.
♦After the test run has completed, set SW4 (832) and (958) to “OFF.”

2. P120,P144T/YNU-A1

Explained below are the procedures for replacing the compressor. Secure sufficient work space before starting replacement work. (See 8-13-1 Ensuring maintenance space (Preparation for the Maintenance of Refrigerant Circuit Parts) <Type A/Type A1>.)

(1) Remove the top compressor cover by unscrewing the three screws. (See Figure 1.)
Remove the compressor cover by unhooking the hooks on the back.

(2) Remove the front compressor cover by unscrewing the four screws. (See Figure 2.)

(3) Cut the two cable ties holding TH4 and TH15, and remove the wiring from the rubber bush on the left compressor cover for TH4, TH15 and the crankcase heater (CH11). (See Figure 3.)

(4) Remove the right and left compressor covers by unscrewing the four screws. (See Figure 4.)

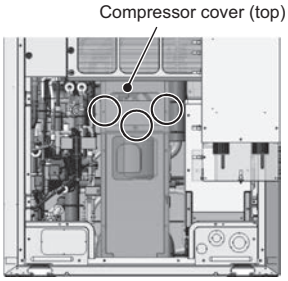

Figure 1

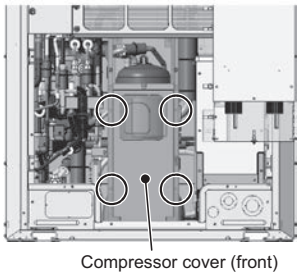

Figure 2

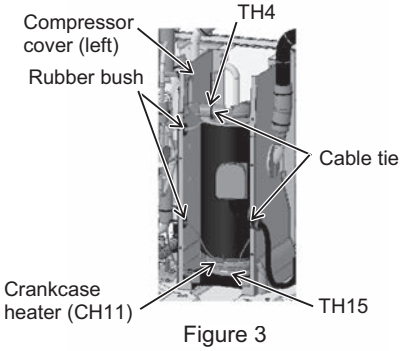

Figure 3

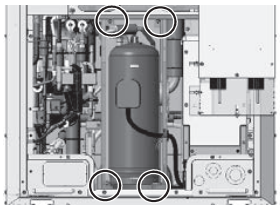
Figure 4

(5) Remove thermal insulation 1 and thermal insulation 2. (See Figure 5.)

(6) Remove the pipe cover and the damper, and cut the suction pipe where indicated in Figure 6.
*When re-placing the pipe cover and the dumper, use the ones with the sizes shown in Figure 6, which are supplied with the replacement compressor.

(7) Remove the compressor discharge pipe by cutting the pipe where indicated in Figure 7 or by removing the braze.

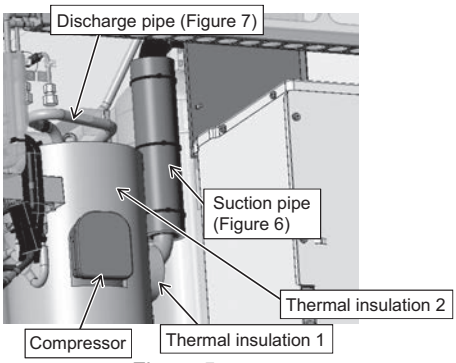

Figure 5

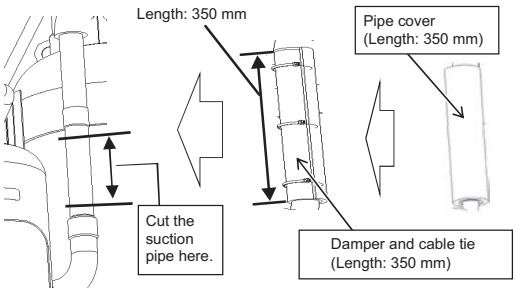

Figure 6

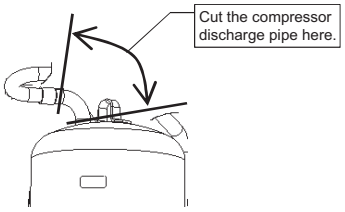

Figure 7

(8) Remove the four bolts holding the compressor down. (See Figure 8.)
The two bolts in the front are also holding down the metal sheets.
(9) Tilting the compressor will cause the refrigerant oil to leak. Seal the pipe where it was cut or removed at the brazed section.
(10) After replacing the compressor, perform brazing using a wet recommended felt sheet. Use caution not to damage the control box, ACC, compressor cover, or damper. (See Figure 9.)

*Precautions for replacing the compressor
· Be sure to perform non-oxidized brazing.
· Before heating the pipes, wrap the refrigerant circuit components with a wet towel to keep the temperature of the components from rising above 120°C.
· After brazing is done, check that the brazing is done properly and check for leaks before vacuum-drying the pipes.
· Direct the brazing torch flame away from the wiring and sheet metals inside the unit not to damage them.
· Wet felt sheets listed below (or its equivalent), and place them around the areas to be brazed to protect the heat exchanger, pipes, and pipe covers from being damaged from the brazing torch flame.
Recommended felt sheets: Spatter felt 50CF-11 (5t x 1 m x 1 m) by TRUSCO Nakayama
Felt sheets that meet the JIS standard (JIS A 1323 type A "Flame retardant testing method for spark droplets of welding and gas cutting on fabric sheets in construction works")

(11) The recommended tightening torque for the compressor fixing bolts is 3.0 N·m. Fasten the bolts using a torque wrench or other tool that can apply the specified torque.
(12) Re-place the compressor covers in the reverse order as they were removed.
* Hold the TH15 and Crankcase heater (CH11) wirings using cable ties so that it does not come into contact with thermal insulation 2. (See Figures 3 and 5.)

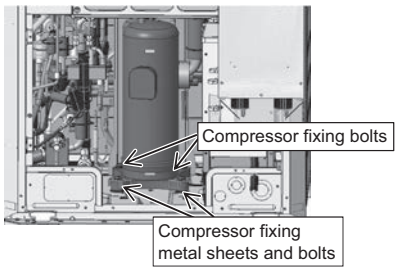

Figure 8

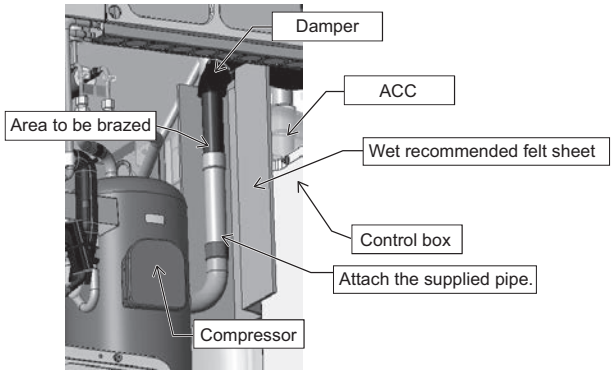

Figure 9

Note
♦After replacing the compressor, set SW4 (832) and (958) to “ON” before conducting a test run.
♦After the test run has completed, set SW4 (832) and (958) to “OFF.”

3. EP72,EP96,EP120,EP144T/YNU-A1

Explained below are the procedures for replacing the compressor. Secure sufficient work space before starting replacement work. (See 8-13-1 Ensuring maintenance space (Preparation for the Maintenance of Refrigerant Circuit Parts) <Type A/Type A1>.)

(1) Remove the top compressor cover by unscrewing the three screws. (See Figure 1.)
Remove the compressor cover by unhooking the hooks on the back.
(2) Remove the front compressor cover by unscrewing the four screws. (See Figure 2.)
(3) Cut the three cable ties holding TH4, TH15 and Crankcase heater (CH11), and remove the wiring from the rubber bush on the left compressor cover. (See Figure 3.)
(4) Remove the right and left compressor covers by unscrewing the four screws. (See Figure 4.)
(5) Remove the saddle and the rubber spacers on the compressor by unscrewing the screw. (See Figure 5.)
(6) Remove the cover of the compressor terminal block box, mounting support metal, and the mounting plate by unscrewing the two screws. (See Figure 6.)

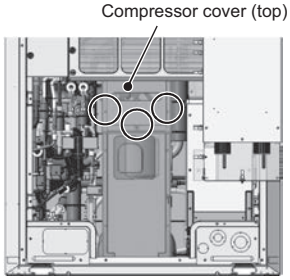

Figure 1

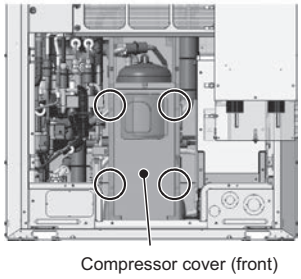

Figure 2

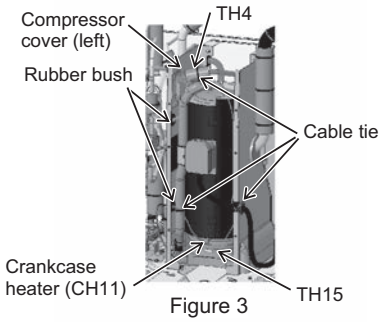

Figure 3

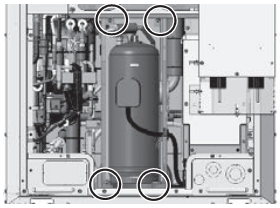

Figure 4

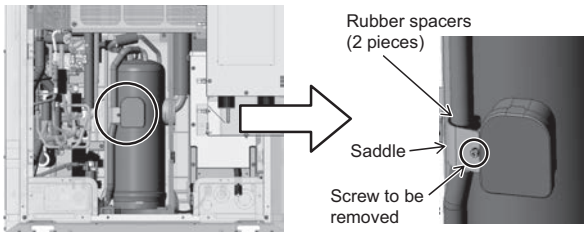

Figure 5

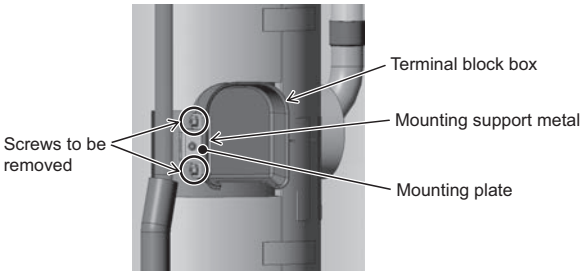

Figure 6

(7) Remove thermal insulation 1 and thermal insulation 2. (See Figure 7.)
(8) Remove the inverter cooling duct from the S module by unscrewing one screw. (See Figure 8.)

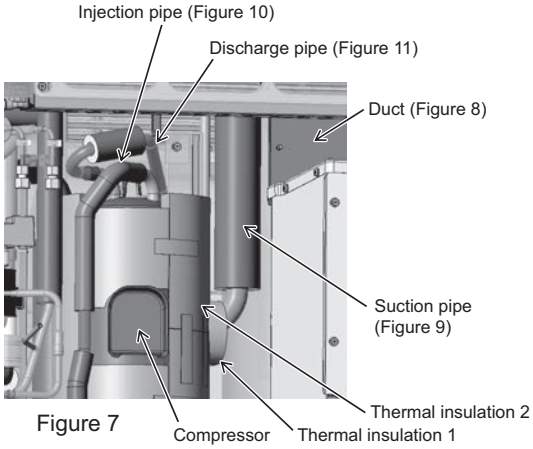

Figure 7

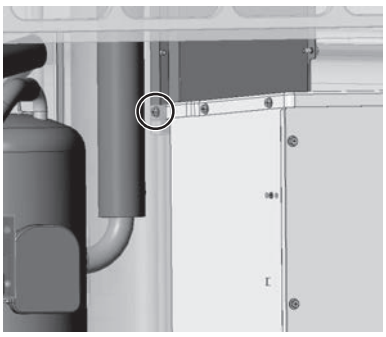

Figure 8

(9) Remove the pipe cover and the damper, and cut the suction pipe where indicated in Figure 9.

(10) Remove the pipe covers, and then remove the braze. (See Figure 10.)

* Do not force the injection pipe to deform.

(11) Remove the compressor discharge pipe by cutting the pipe where indicated in Figure 11 or by removing the braze.

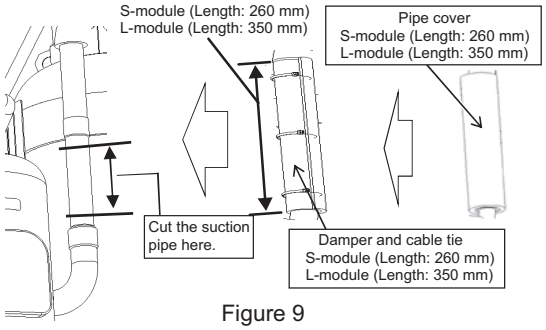

Figure 9

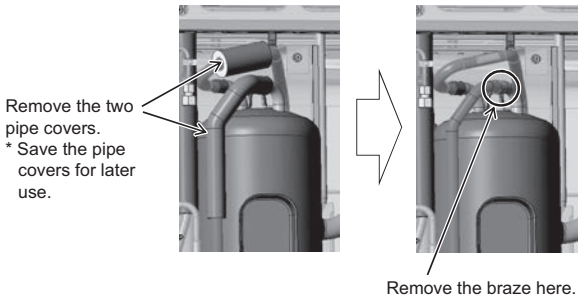

Figure 10

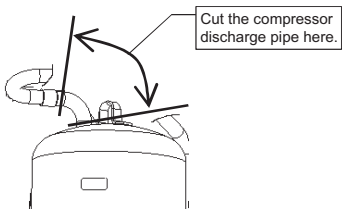

Figure 11

(12) Remove the four bolts holding the compressor down. (See Figure 12.)
The two bolts in the front are also holding down the metal sheets.

(13) Tilting the compressor will cause the refrigerant oil to leak. Seal the pipe where it was cut or removed at the brazed section.

(14) Braze the suction pipe using a wet recommended felt sheet. Use caution not to damage the control box, ACC, compressor cover, or dumper during brazing. (See Figure 13.)

*Precautions for replacing the compressor
- Be sure to perform non-oxidized brazing.
- Before heating the pipes, wrap the refrigerant circuit components with a wet towel to keep the temperature of the components from rising above 120°C.
- After brazing is done, check that the brazing is done properly and check for leaks before vacuum-drying the pipes.
- Direct the brazing torch flame away from the wiring and sheet metals inside the unit not to damage them.
- Wet felt sheets listed below (or its equivalent), and place them around the areas to be brazed to protect the heat exchanger, pipes, and pipe covers from being damaged from the brazing torch flame.
  Recommended felt sheets: Spatter felt 50CF-11 (5t x 1 m x 1 m) by TRUSCO Nakayama
  Felt sheets that meet the JIS standard (JIS A 1323 type A "Flame retardant testing method for spark droplets of welding and gas cutting on fabric sheets in construction works")

(15) The recommended tightening torque for the compressor fixing bolts is 3.0 N·m. Fasten the bolts using a torque wrench or other tool that can apply the specified torque.

(16) Re-place the compressor covers in the reverse order as they were removed.

* Hold the TH15 and Crankcase heater (CH11) wirings in place with the bands to keep the wiring from coming in contact with insulation 2. (See Figures 3 and 7.)

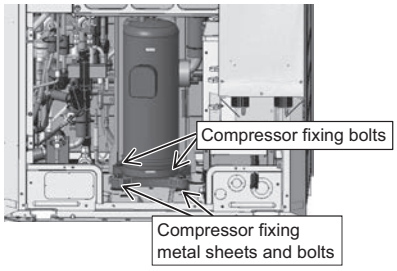

Figure 12

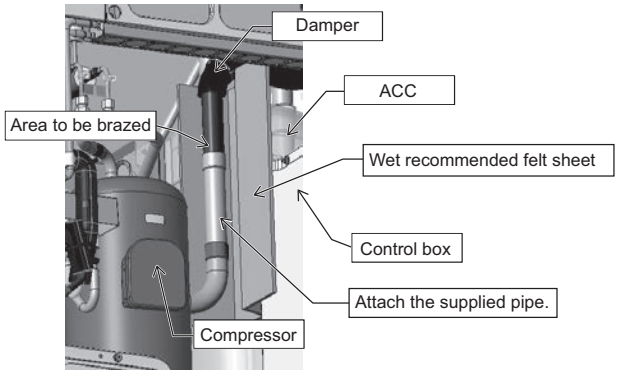

Figure 13

Note

- After replacing the compressor, set SW4 (832) and (958) to “ON” before conducting a test run.
- After the test run has completed, set SW4 (832) and (958) to “OFF.”

4. P168, EP168, EP192, EP216, EP240T/YNU-A1

Explained below is the procedure for replacing the compressor. Secure sufficient work space before starting replacement work. (See 8-13-1 Ensuring maintenance space (Preparation for the Maintenance of Refrigerant Circuit Parts) <Type A/Type A1>.)

(1) Remove the front compressor cover by unscrewing the three screws. (See Figure 1.)
(2) Remove the top compressor cover by unscrewing the three screws. (See Figure 2.)
(3) Cut the two cable ties holding TH4 and TH15, and remove the wiring from the rubber bush on the right compressor cover for TH4, TH15 and the crankcase heater (CH11). (2 cable ties, Figure 3)
(4) Remove the right compressor cover by unscrewing the screw. (See Figure 4.)
(5) Remove the saddle and the rubber spacers from the compressor by unscrewing the screw. (See Figure 5.) (For EP models only)
(6) Remove the cover of the compressor terminal block box, mounting support metal, and the mounting plate by unscrewing the two screws. (See Figure 6.) (For EP models only)

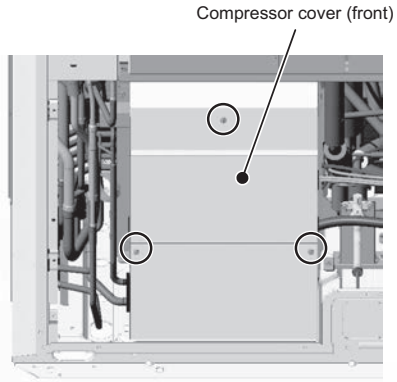

Figure 1

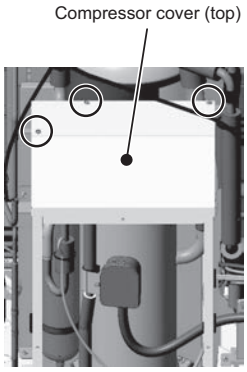

Figure 2

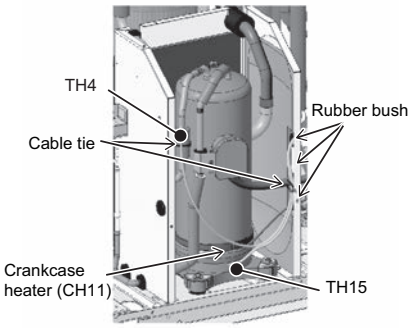

Figure 3

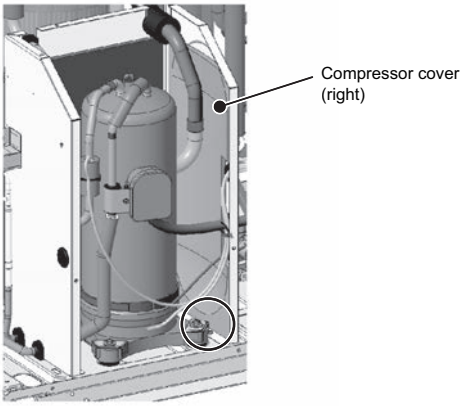

Figure 4

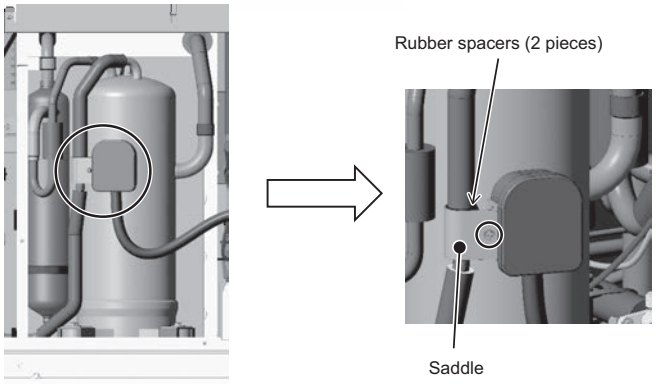

Figure 5

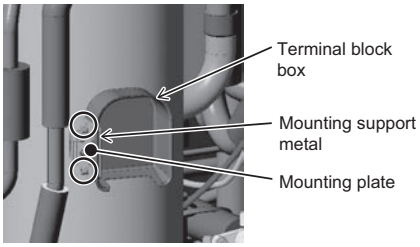

Figure 6

(7) Remove the braze from the suction pipe of the compressor. (See Figure 7.)
Remove the braze by using the recommended felt wet with water, using caution not to damage the compressor cover (rear) or damper.
(8) Remove the pipe covers, and then remove the braze. (See Figure 8.) (For EP models only)
*Do not force the injection pipe to deform.
(9) Remove the compressor discharge pipe by cutting the pipe where indicated in the figure or by removing the braze. (See Figure 9.)

Figure 7

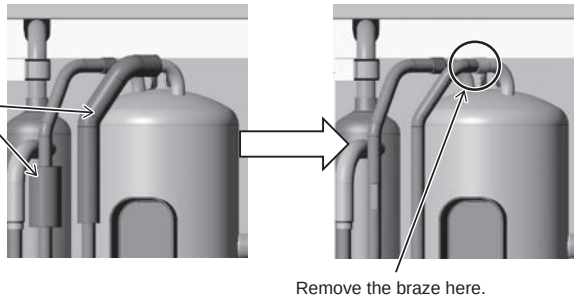

Figure 8

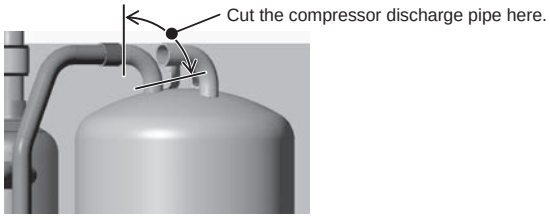

Figure 9

(10) Remove the four bolts holding the compressor down. (See Figure 10.)
Compressor fixing plate is attached to all four bolts.
(11) Tilting the compressor will cause the refrigerant oil to leak. Seal the pipe where it was cut or removed at the brazed section.
(12) Braze the suction pipe using a wet recommended felt sheet. Use caution not to damage the compressor cover (rear), or dumper during brazing.

*Precautions for replacing the compressor
- Be sure to perform non-oxidized brazing.
- Before heating the pipes, wrap the refrigerant circuit components with a wet towel to keep the temperature of the components from rising above 120°C.
- After brazing is done, check that the brazing is done properly and check for leaks before vacuum-drying the pipes.
- Direct the brazing torch flame away from the wiring and sheet metals inside the unit not to damage them.
- Wet felt sheets listed below (or its equivalent), and place them around the areas to be brazed to protect the heat exchanger, pipes, and pipe covers from being damaged from the brazing torch flame.
  Recommended felt sheets: Spatter felt 50CF-11 (5t x 1 m x 1 m) by TRUSCO Nakayama
  Felt sheets that meet the JIS standard (JIS A 1323 type A "Flame retardant testing method for spark droplets of welding and gas cutting on fabric sheets in construction works")

(13) The recommended tightening torque for the compressor fixing bolts is 3.0 N·m. Fasten the bolts using a torque wrench or other tool that can apply the specified torque.
(14) Re-place the components that were removed as they were.

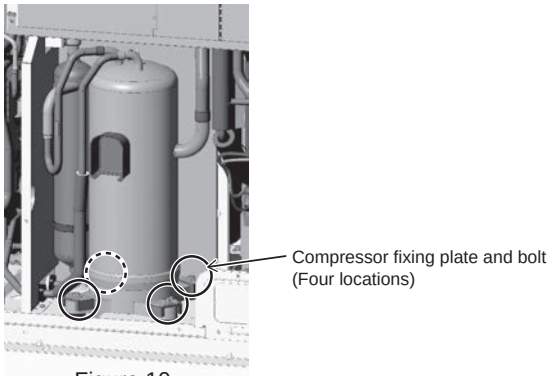

Figure 10

Note
- After replacing the compressor, set SW4 (832) and (958) to “ON” before conducting a test run.
- After the test run has completed, set SW4 (832) and (958) to “OFF.”

8-13-10 Removal Instructions for the Control Box <Type A/Type A1>

1. S module (INV box)
(1) YNU

Explained below are the procedures for replacing the S module INV BOX. Before replacement, perform the procedures described in "8-13-7 Transformer box replacement instructions 1. S module (YNU models only)."

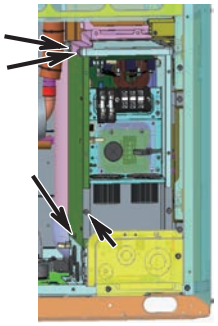

[Figure 1]

[Removing the left outside panel]
Unscrew the four screws indicated with arrows in Figure 1 to remove the left outside panel.

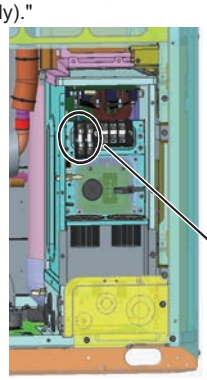

[Figure 2]

[Removing the left inside panel]
Unscrew the screw indicated with an arrow in Figure 2-a (located to the left of the terminal board) to remove the left panel.

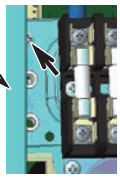

[Figure 2-a]

[Removing the ground wire]
Remove the two ground wires (screwed on) indicated by Arrow Ⓐ in Figure 3-a, and unsaddle them from the saddle indicated by Arrow Ⓑ.

[Removing the wiring]
Remove the following connectors and the screw terminals.
(See Figures 3-b and 3-c.)
CNINV on the FAN INV board
CN-P, CN-N, FT-P1, FT-P2, SC-L1, SC-L2, and SC-L3 on the INV35 board

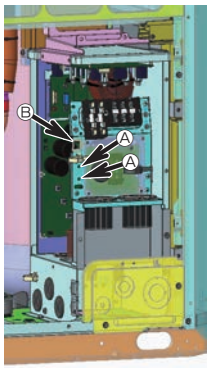

[Figure 3-a]

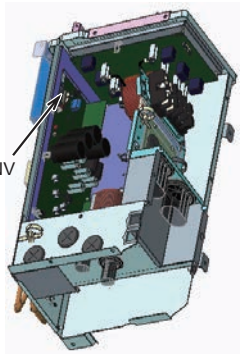

[Figure 3-b]

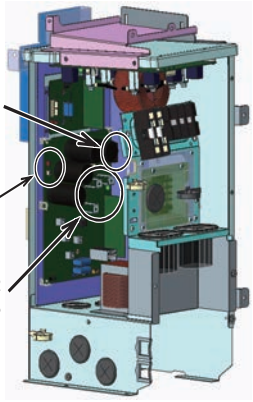

[Figure 3-c]

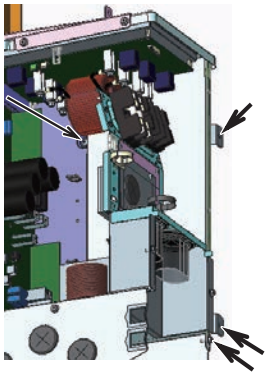

[Figure 4-a]

[Removing the terminal board and top panel (Noise Filter board)]
Unscrew the four screws indicated with arrows in Figure 4-a. Pull the right panel and top panel forward. Lift the back end of the top panel and pull the terminal board and top panel (Noise Filter board) together to remove them.
(See Figure 4-b.)

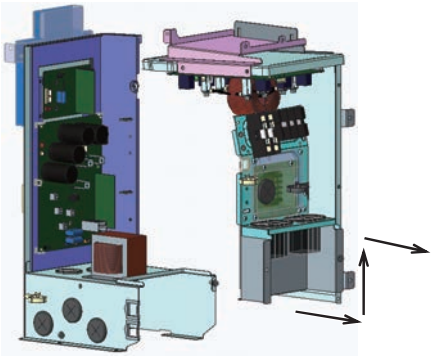

[Figure 4-b]

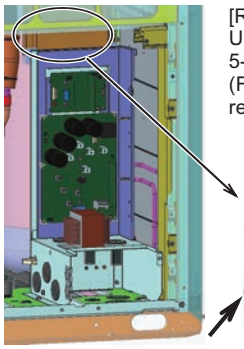

[Figure 5]

[Removing the duct]
Unscrew the screw indicated with arrows in Figure 5-a, and pull up the duct to remove it.
(Figure 5-b shows the unit after the duct was removed.)

[Figure 5-a]

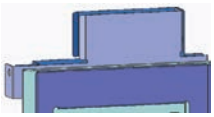

[Figure 5-b]

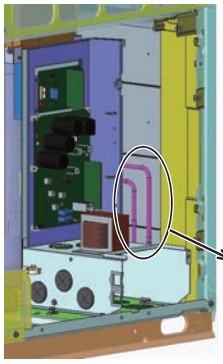

[Figure 6]

[Removing refrigerant cooling pipes]
Remove the braze from the two areas indicated by the arrows in Figure 6-a.
Before removing the pipes, collect the refrigerant.
Protect the surrounding components from the brazing torch flame as necessary.

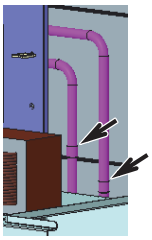

[Figure 6-a]

[Removing the remaining relevant components]
Unscrew the three screws indicated with arrows Ⓐ in Figure 7.
Pull the unscrewed part forward, and unhook the part indicated with Arrow Ⓑ to remove the part from the base of the unit.

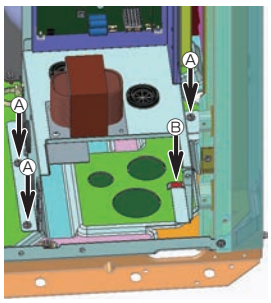

[Figure 7]

*Notes on replacing the control box (when replacing the refrigerant cooling pipes)
- Be sure to perform non-oxidized brazing.
- Before heating the pipes, wrap the refrigerant circuit components with a wet towel to keep the temperature of the components from rising above 120°C.
- After brazing is done, check that the brazing is done properly and check for leaks before vacuum-drying the pipes.
- Direct the brazing torch flame away from the wiring and sheet metals inside the unit not to damage them.
- Wet felt sheets listed below (or its equivalent), and place them around the areas to be brazed to protect the heat exchanger, pipes, and pipe covers from being damaged from the brazing torch flame.
  Recommended felt sheets: Spatter felt 50CF-11 (5t x 1 m x 1 m) by TRUSCO Nakayama
  Felt sheets that meet the JIS standard (JIS A 1323 type A "Flame retardant testing method for spark droplets of welding and gas cutting on fabric sheets in construction works")

(2) TNU

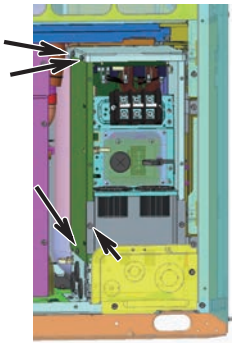

[Figure 1]

[Removing the left outside panel]
Unscrew the four screws indicated with arrows in Figure 1 to remove the left outside panel.

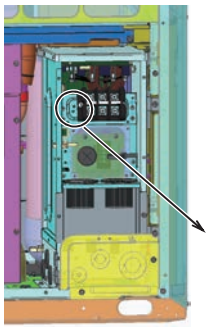

[Figure 2]

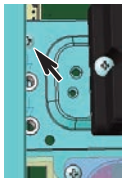

[Figure 2-a]

[Removing the left inside panel]
Unscrew the screw indicated with an arrow in Figure 2-a (located to the left of the terminal board) to remove the left panel.

[Removing the ground wire]
Remove the two ground wires (screwed on) indicated by Arrow Ⓐ in Figure 3-a, and unsaddle them from the saddle indicated by Arrow Ⓑ.

[Removing the wiring]
Remove the following connectors and the screw terminals.
(See Figures 3-b and 3-c.)
CN012, CN013, and CN11 on the Noise Filter board
CNINV on the FAN INV board
SC-L1, SC-L2, and SC-L3 on the INV38 board
CN-P, CN-N, FT-P1, and FT-P2 on the CAP07 board

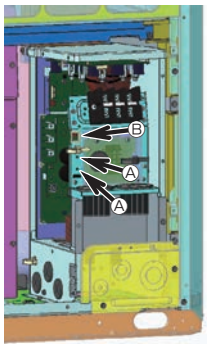

[Figure 3-a]

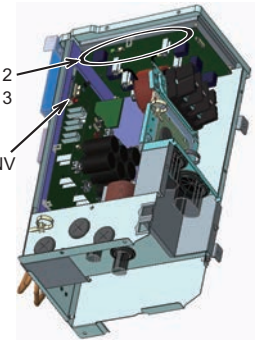

[Figure 3-b]

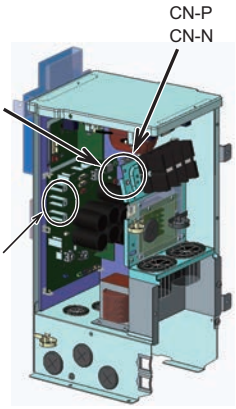

[Figure 3-c]

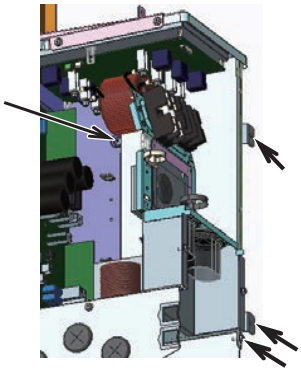

[Figure 4-a]

[Removing the terminal board and top panel (Noise Filter board)]
Unscrew the four screws indicated with arrows in Figure 4-a. Pull the right panel and top panel forward. Lift the back end of the top panel and pull the terminal board and top panel (Noise Filter board) together to remove them.
(See Figure 4-b.)

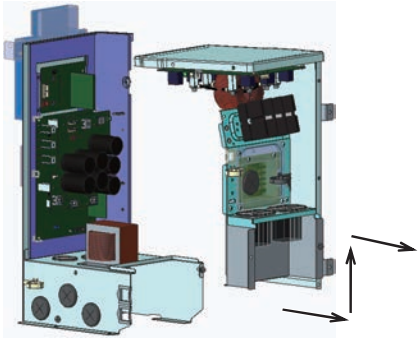

[Figure 4-b]

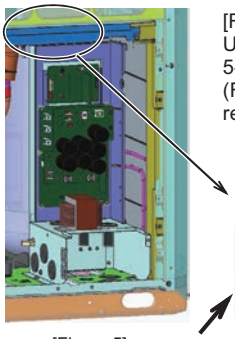

[Figure 5]

[Removing the duct]
Unscrew the screw indicated with arrows in Figure 5-a, and pull up the duct to remove it.
(Figure 5-b shows the unit after the duct was removed.)

[Figure 5-a]

[Figure 5-b]

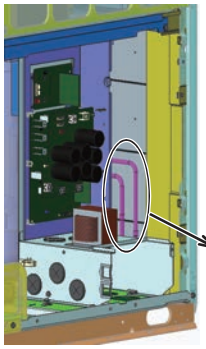

[Figure 6]

[Removing refrigerant cooling pipes]
Remove the braze from the two areas indicated by the arrows in Figure 6-a.
Before removing the pipes, collect the refrigerant.
Protect the surrounding components from the brazing torch flame as necessary.

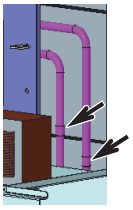

[Figure 6-a]

[Removing the remaining relevant components]
Unscrew the three screws indicated with arrows Ⓐ in Figure 7.
Pull the unscrewed part forward, and unhook the part indicated with Arrow Ⓑ to remove the part from the base of the unit.

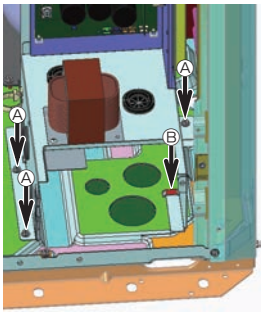

[Figure 7]

*Notes on replacing the control box (when replacing the refrigerant cooling pipes)
- Be sure to perform non-oxidized brazing.
- Before heating the pipes, wrap the refrigerant circuit components with a wet towel to keep the temperature of the components from rising above 120°C.
- After brazing is done, check that the brazing is done properly and check for leaks before vacuum-drying the pipes.
- Direct the brazing torch flame away from the wiring and sheet metals inside the unit not to damage them.
- Wet felt sheets listed below (or its equivalent), and place them around the areas to be brazed to protect the heat exchanger, pipes, and pipe covers from being damaged from the brazing torch flame.
  Recommended felt sheets: Spatter felt 50CF-11 (5t x 1 m x 1 m) by TRUSCO Nakayama
  Felt sheets that meet the JIS standard (JIS A 1323 type A "Flame retardant testing method for spark droplets of welding and gas cutting on fabric sheets in construction works")

2. L/XL/EXL module
(1) YNU

Explained below are the procedures for replacing the L, XL, and EXL module control boxes. Before replacement, perform the procedures described in "8-13-7 Transformer box replacement instructions 2. L/XL/EXL module (YNU models only)."

[Removing the duct]
Unscrew the two screws indicated with arrows in Figure 1-a, and pull up the duct to remove it.
(Figure 1-b shows the unit after the duct was removed.)
*The same procedures apply to the L, XL, and EXL modules.

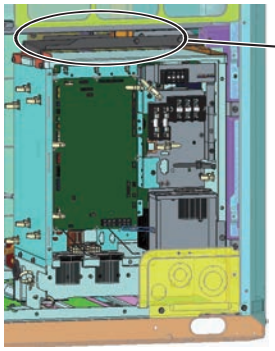

[Figure 1]

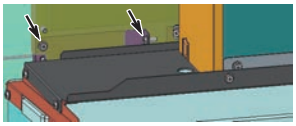

[Figure 1-a]

[Figure 1-b]

[Removing the refrigerant cooling pipes]
Remove the braze at the two areas indicated with arrows in Figure 2-a(L module), Figure 2-b (XL and EXL modules).
Before removing the pipes, collect the refrigerant.
Refer to "Notes on replacing refrigerant circuit components."

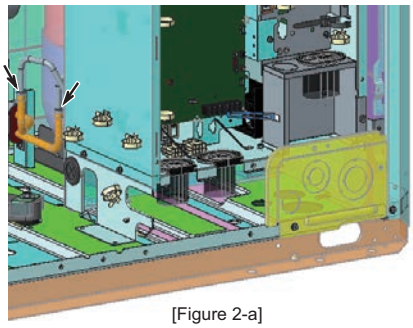

[Figure 2-a]

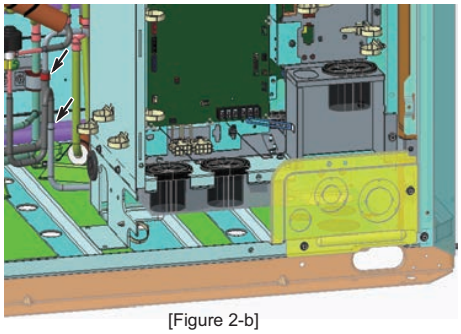

[Figure 2-b]

[Removing the remaining relevant components]
Unscrew the four screws indicated with arrows Ⓐ in Figure 3.
The arrow indicated with dotted lines is located where indicated in Figure 3-a.
Pull the unscrewed part forward, and unhook the part indicated with Arrow Ⓑ to remove the part from the base of the unit.

To remove the rest of the components from the pillar, unscrew the two screws indicated with Arrow Ⓒ in Figure 4.
*The same procedures apply to the L, XL, and EXL modules.

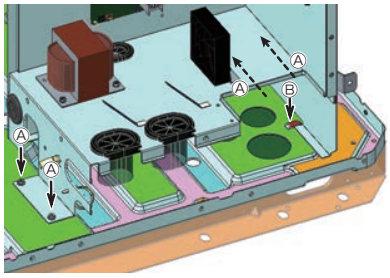

[Figure 3]

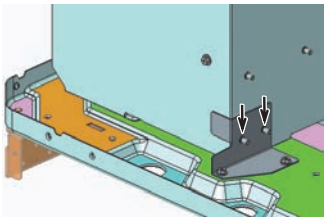

[Figure 3-a]

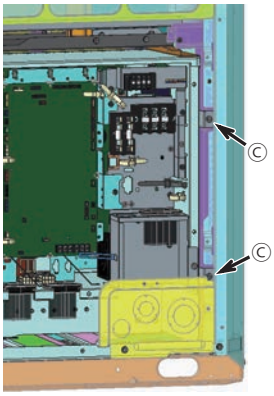

[Figure 4]

*Notes on replacing the control box (when replacing the refrigerant cooling pipes)
- Be sure to perform non-oxidized brazing.
- Before heating the pipes, wrap the refrigerant circuit components with a wet towel to keep the temperature of the components from rising above 120°C.
- After brazing is done, check that the brazing is done properly and check for leaks before vacuum-drying the pipes.
- Direct the brazing torch flame away from the wiring and sheet metals inside the unit not to damage them.
- Wet felt sheets listed below (or its equivalent), and place them around the areas to be brazed to protect the heat exchanger, pipes, and pipe covers from being damaged from the brazing torch flame.
  Recommended felt sheets: Spatter felt 50CF-11 (5t x 1 m x 1 m) by TRUSCO Nakayama
  Felt sheets that meet the JIS standard (JIS A 1323 type A "Flame retardant testing method for spark droplets of welding and gas cutting on fabric sheets in construction works")

(2) TNU

[Removing the duct]
Unscrew the two screws indicated with arrows in Figure 1-a, and pull up the duct to remove it.
(Figure 1-b shows the unit after the duct was removed.)
*The same procedures apply to the L, XL, and EXL modules.

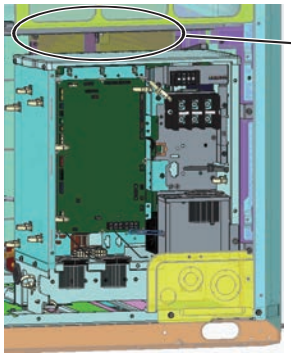

[Figure 1]

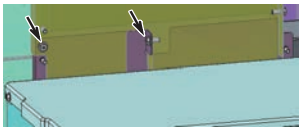

[Figure 1-a]

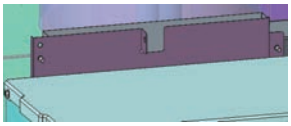

[Figure 1-b]

[Removing the refrigerant cooling pipes]
Remove the braze at the two areas indicated with arrows in Figure 2-a(L module), Figure 2-b (XL and EXL modules).
Before removing the pipes, collect the refrigerant.
Refer to "Notes on replacing refrigerant circuit components."

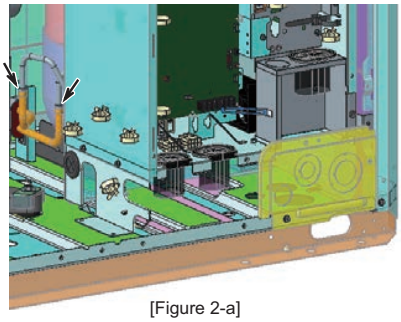

[Figure 2-a]

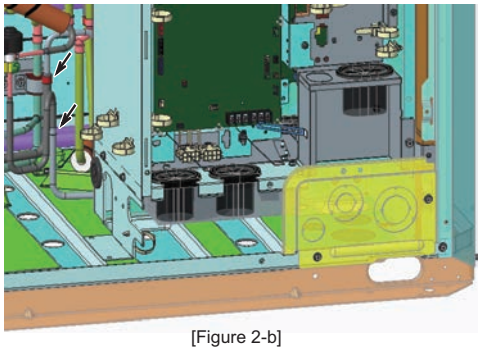

[Figure 2-b]

[Removing the remaining relevant components]
Unscrew the four screws indicated with arrows Ⓐ in Figure 3.
The arrow indicated with dotted lines is located where indicated in Figure 3-a.
Pull the unscrewed part forward, and unhook the part indicated with Arrow Ⓑ to remove the part from the base of the unit.

To remove the rest of the components from the pillar, unscrew the two screws indicated with Arrow Ⓒ in Figure 4.
*The same procedures apply to the L, XL, and EXL modules.

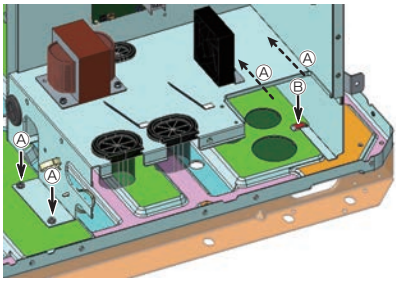

[Figure 3]

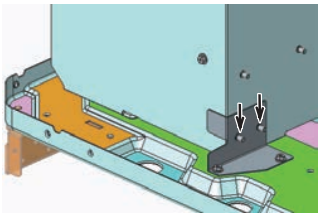

[Figure 3-a]

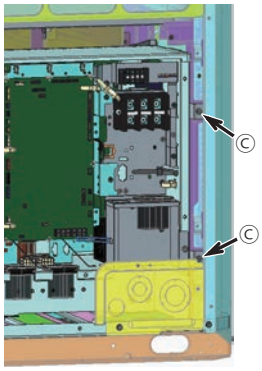

[Figure 4]

*Notes on replacing the control box (when replacing the refrigerant cooling pipes)
- Be sure to perform non-oxidized brazing.
- Before heating the pipes, wrap the refrigerant circuit components with a wet towel to keep the temperature of the components from rising above 120°C.
- After brazing is done, check that the brazing is done properly and check for leaks before vacuum-drying the pipes.
- Direct the brazing torch flame away from the wiring and sheet metals inside the unit not to damage them.
- Wet felt sheets listed below (or its equivalent), and place them around the areas to be brazed to protect the heat exchanger, pipes, and pipe covers from being damaged from the brazing torch flame.
  Recommended felt sheets: Spatter felt 50CF-11 (5t x 1 m x 1 m) by TRUSCO Nakayama
  Felt sheets that meet the JIS standard (JIS A 1323 type A "Flame retardant testing method for spark droplets of welding and gas cutting on fabric sheets in construction works")

8-13-11 Transformer box replacement instructions <Type A/Type A1>

1. S module (YNU models only)

(1) Ensure there is adequate work space. (See 8-13-1.)
(2) Unscrew the screw on the near side of the transformer box. (2 screws as shown in Figure 1.)
(3) Remove the inverter control box cover. (2 screws as shown in Figure 1.)
(4) Disconnect the transformer box wiring connectors and the grounding wire.
(2 main control box connectors, 1 inverter control box connector, and 1 grounding screw as shown in Figure 2.)
(5) Hook the main control box on the fin guard, and then remove the top compressor cover. (3 screws as shown in Figure 3.)
(6) Remove the compressor cover (front). (4 screws as shown in Figure 4.)

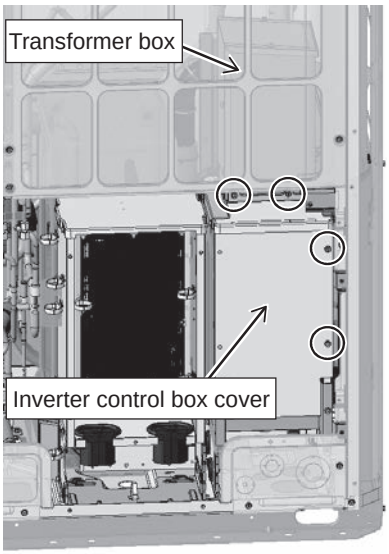

Figure 1

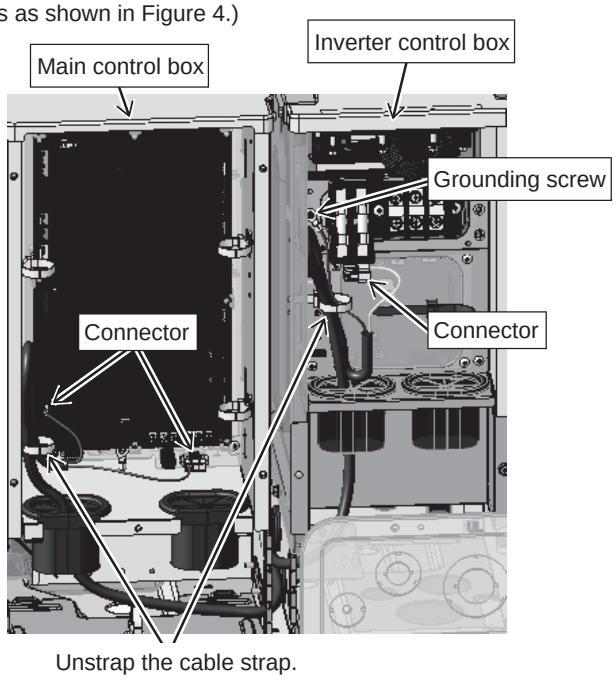

Figure 2

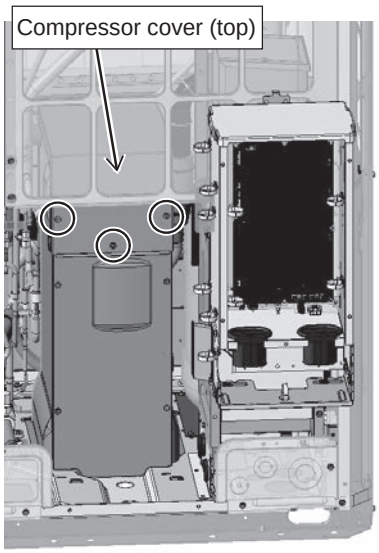

Figure 3

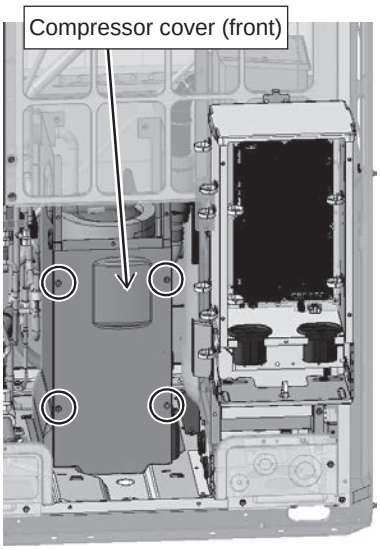

Figure 4

(7) Remove the compressor cover (right). (2 screws and 1 tab as shown in Figure 5.)
(8) Unscrew the screw on the far side of the transformer box. (1 screw as shown in Figure 6.)
(9) Remove the transformer box as shown in the figure. (Figure 7)
*Use caution not to damage the heat exchanger fins or pipes and wires in the adjacent areas. (The transformer box weighs approximately 14 kg (494 oz).)

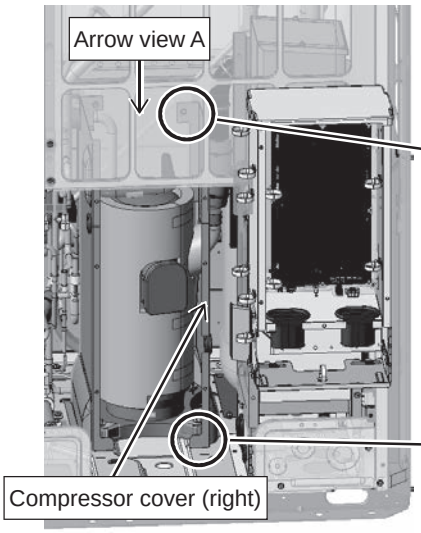

Figure 5

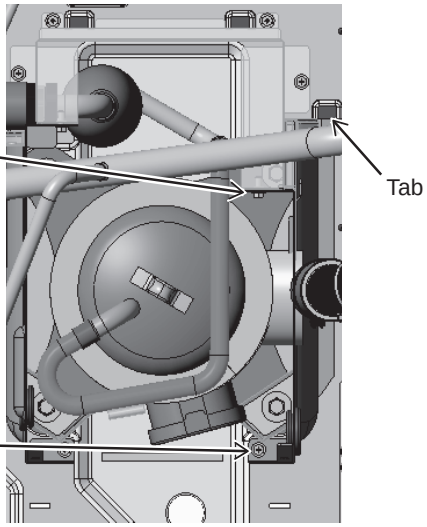

Arrow view A

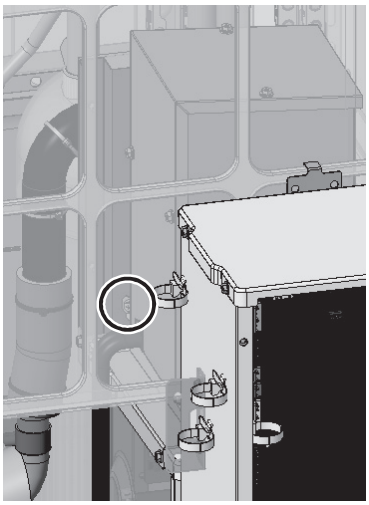

Figure 6

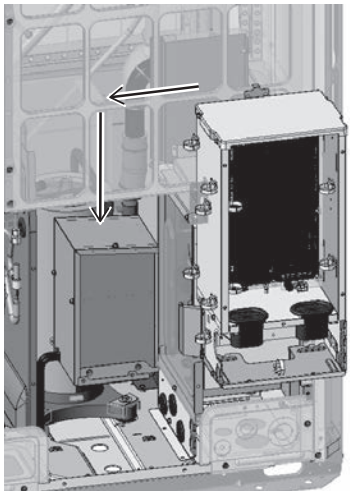

Figure 7

2. L/XL/EXL module (YNU models only)

(1) Ensure there is adequate work space. (See 8-13-1.)
(2) Remove the control box cover. (5 screws as shown in Figure 1.)
(3) Unstrap the cable straps holding the transformer box wiring, and disconnect the wiring connectors and the grounding wire. (5 cable straps, 3 connectors, and 1 grounding screw as shown in Figure 2.)

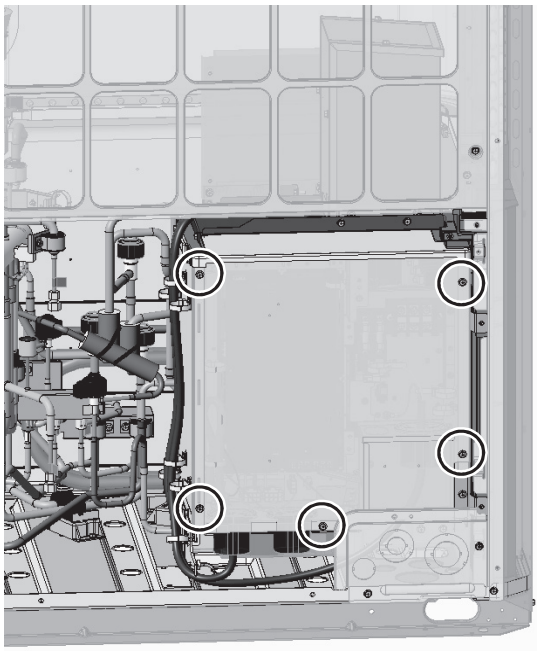

Figure 1

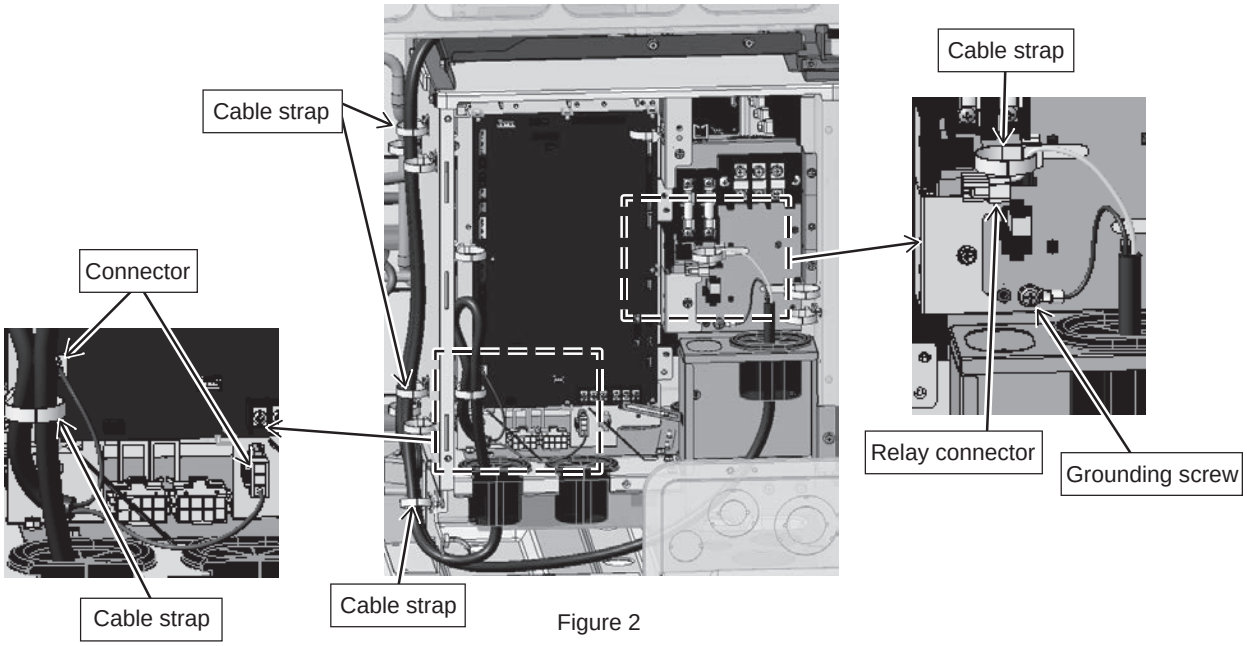

Figure 2

(4) Remove the left control box panel (*applicable to the XL and EXL modules only). (4 screws as shown in Figure 3.)
(5) Unscrew the screw holding the transformer box, and move the box as shown in the figure. (3 screws as shown in Figure 4.)
(6) Rotate the transformer box 90 degrees to remove it (*applicable to the XL and EXL modules only). (Figure 5)

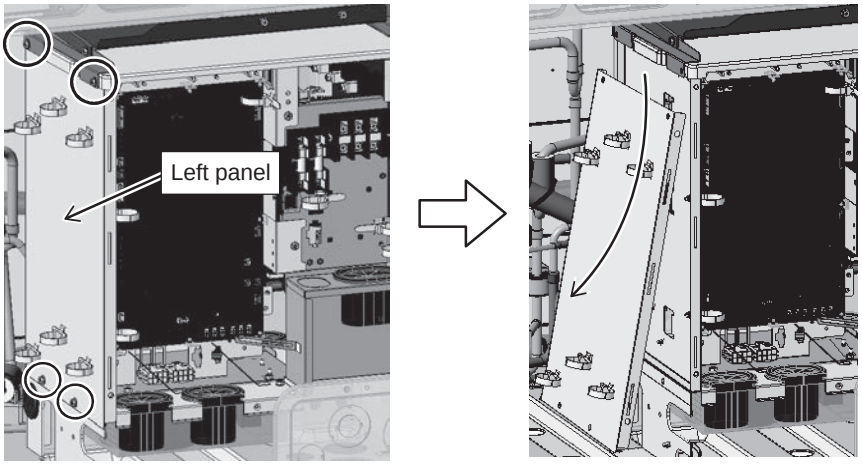

Figure 3

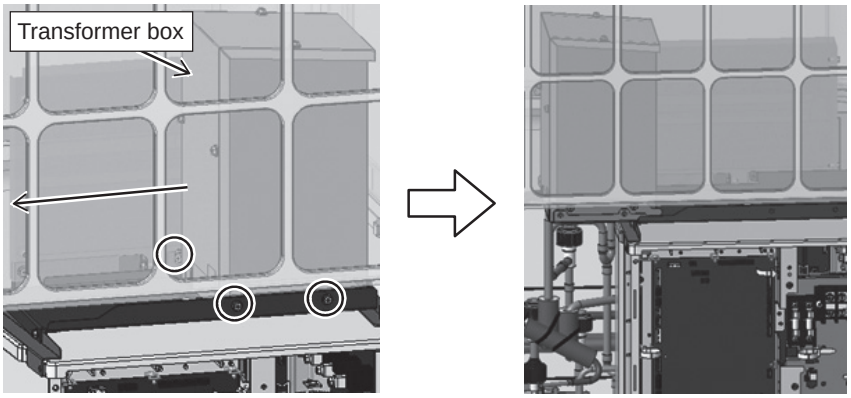

Figure 4

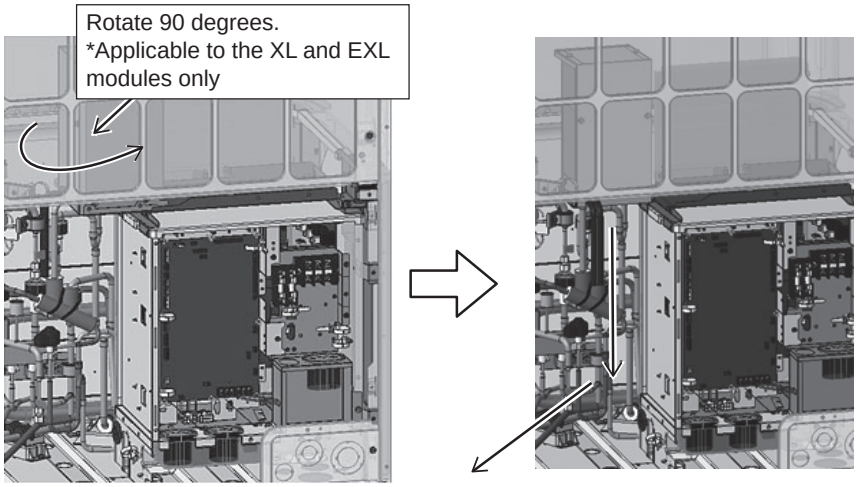

Figure 5

(7) Before placing the transformer box, set the cardboard support (*applicable to the XL and EXL modules only). (Figure 6)
(8) Temporarily place the transformer box on the cardboard support (*applicable to the XL and EXL modules only). (Figure 7)
(9) Lift the transformer box to the position as shown in the figure, rotate the transformer box 90 degrees (*applicable to the XL and EXL modules only), move the box to the designated position, and screw it down. (3 screw as shown in Figure 8.)
*Use caution not to damage the heat exchanger fins or pipes and wires in the adjacent areas when replacing the transformer box. (The transformer box weighs approximately 14 kg (494 oz).)

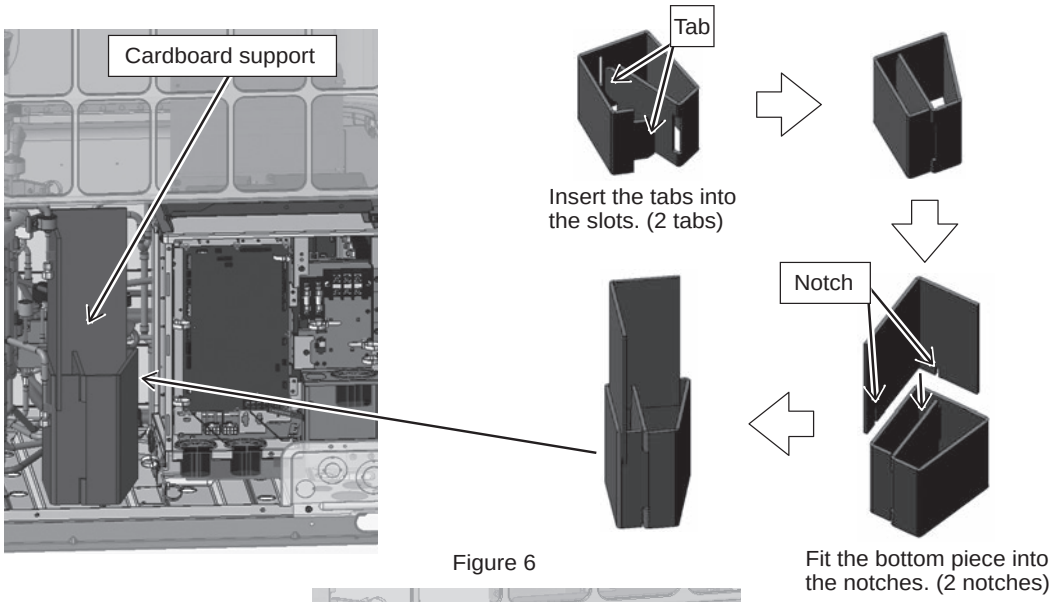

Figure 6

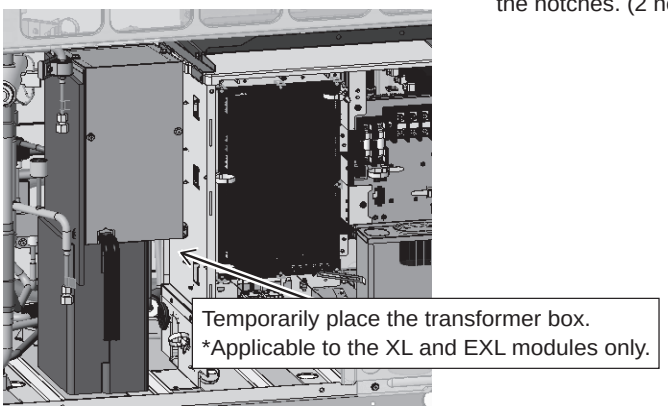

Figure 7

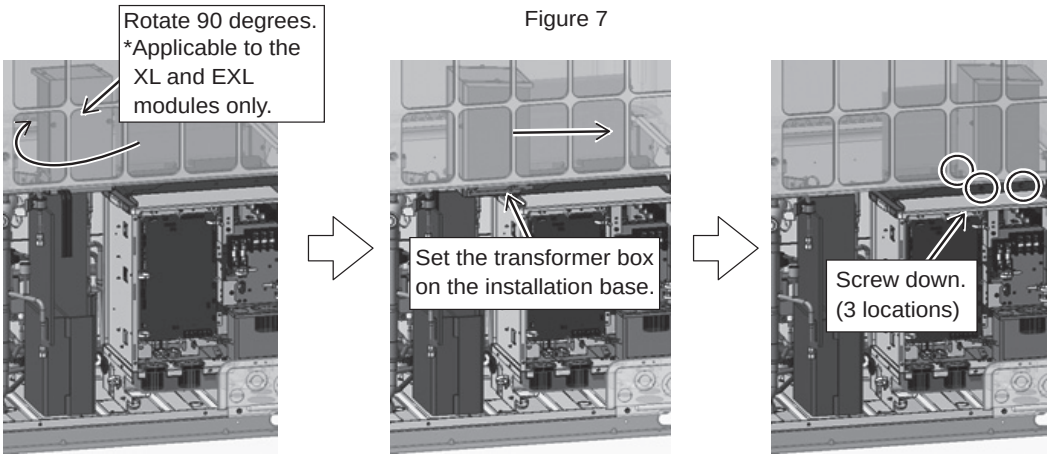

Figure 8

8-13-12 Maintenance Procedure for the Drain Pan <Type A/Type A1>

1. S-module

[Drain pan removal procedure]
(1) Remove the front panel from the unit by unscrewing the eight screws. (See Figure 1.)
(2) Cut the cable tie, unscrew the screw, and pull out the drain pan cover toward the right. (See Figure 3.)
(3) Remove the two rod holders holding the check joints in place, using a wrench. (See Figure 4.)
(4) Remove the drain pan by unscrewing the two screws. (See Figure 5.)
(5) Clean the drain pan and the drain pan cover. (See Figure 6.)
Remove dust and dirt from the drain groove.

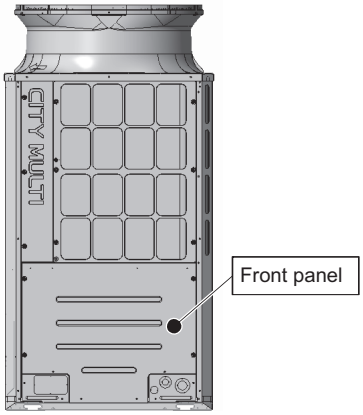

Figure 1

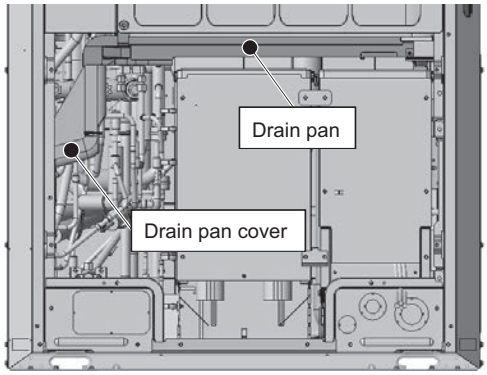

Figure 2

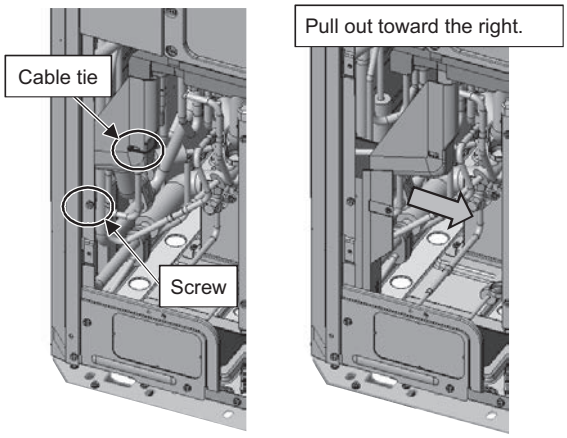

Figure 3

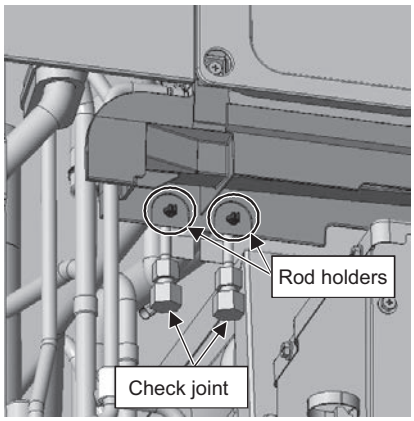

Figure 4

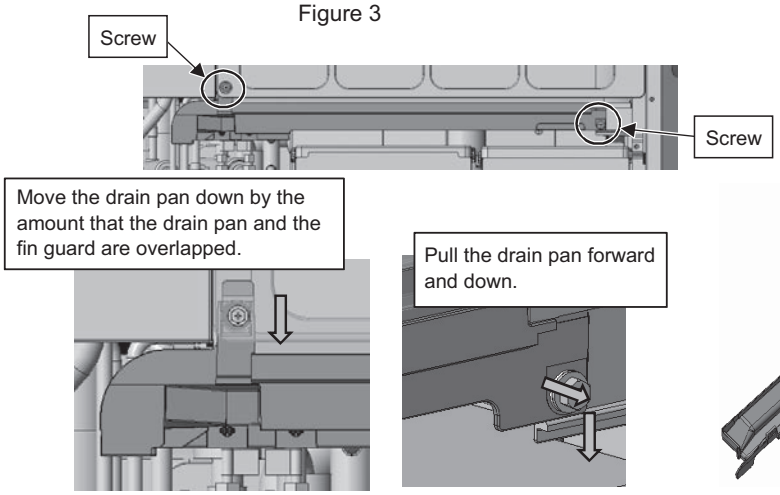

Figure 5

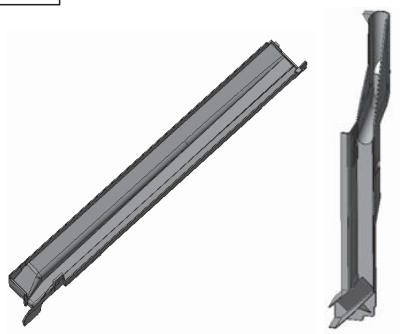

Figure 6

[Drain pan mounting procedure]

*Reuse the drain pan mounting screws that were removed from the replaced drain pan. (M5 x 16 mm with a nylon washer)

(1) Screw down the drain pan with two screws. (See Figure 7.)
(2) Hold the check joints to the drain pan with two rod holders. (See Figure 8.)
(3) Make sure that the silicon tube is properly placed on the defrost pipe, and then place the drain pan cover.
Place the drain pan cover along the defrost pipe, and fit it to the drain pan. (See Figures 9 and 10.)
(4) Thread a cable tie through the rectangle hole on the screwed-down drain cover, and hold the silicon tube and the defrost pipe together in place. (See Figure 11.)
(5) Screw down the front panel with eight screws. (See Figure 12.)

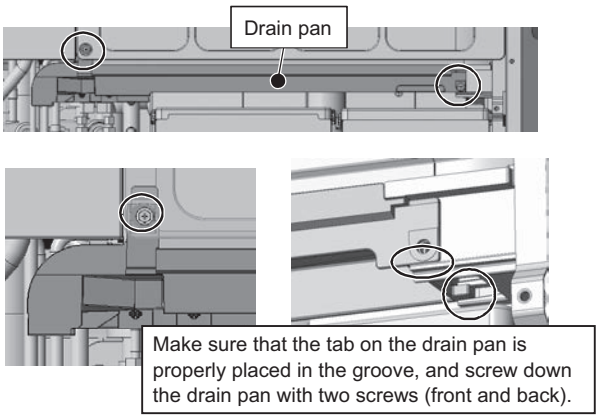

Figure 7

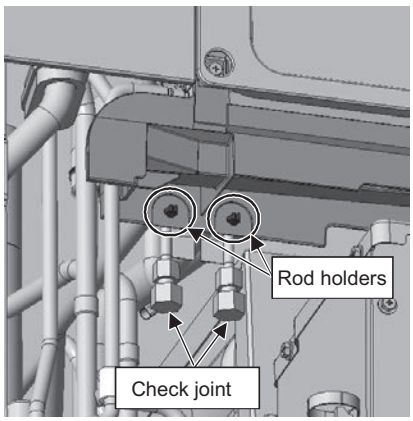

Figure 8

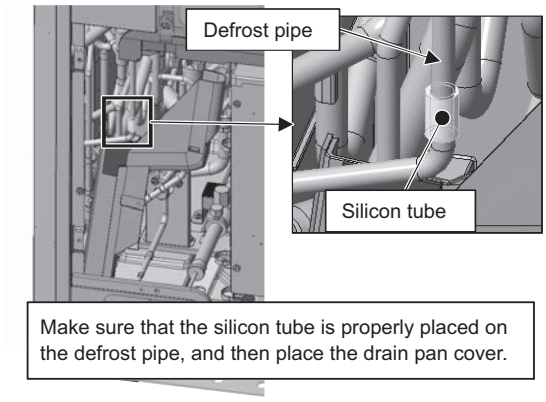

Figure 9

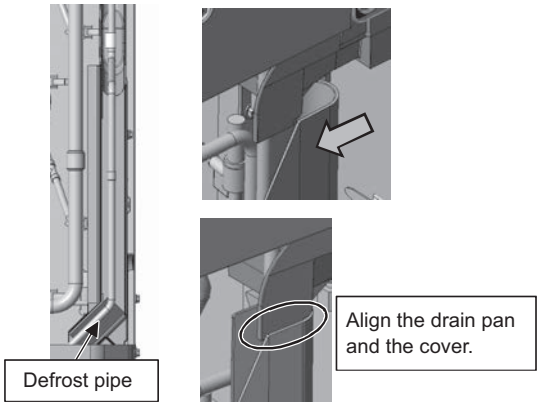

Figure 10

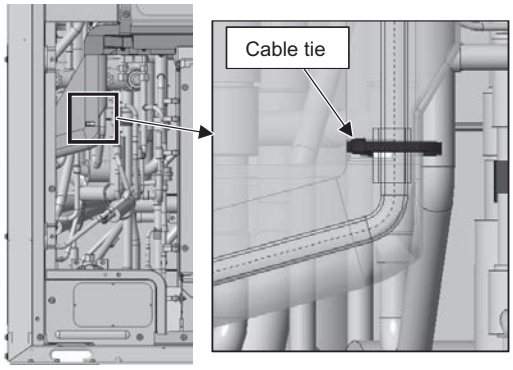

Figure 11

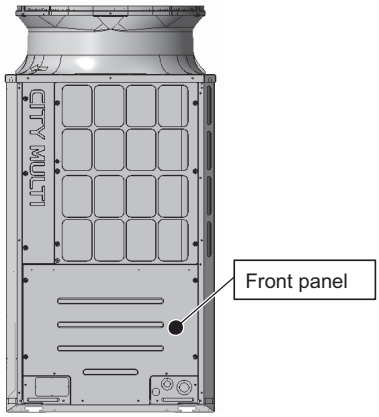

Figure 12

2. L-module

[Drain pan removal procedure]

(1) Remove the front panel from the unit by unscrewing the 14 screws. (See Figure 1.)
(2) Remove the fin guard and the center pillar by unscrewing the 11 screws shown in Figure 2.
Remove the cable straps from the center pillar. (See Figure 2.)
(3) Cut the cable tie, unscrew the screw, and pull the drain cover out to the right. (See Figure 3.)
(4) Remove the two rod holders holding the check joints in place, using a wrench. (See Figure 4.)
(5) Remove the drain pan by unscrewing the two screws. (See Figure 5.)
(6) Clean the drain pan and the drain pan cover. (See Figure 6.)
Remove dust and dirt from the drain groove.

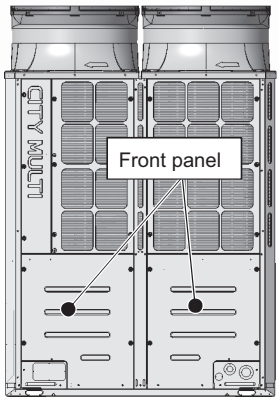

Figure 1

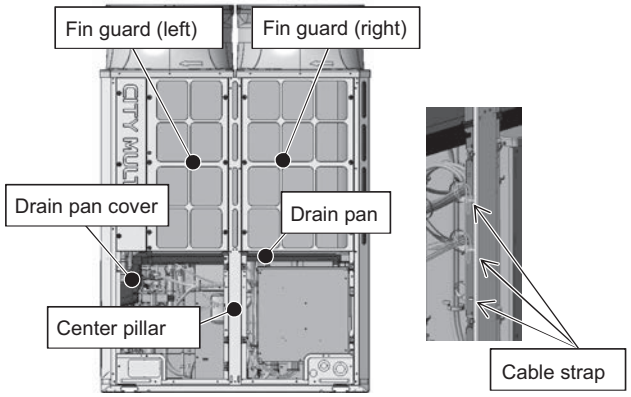

Figure 2

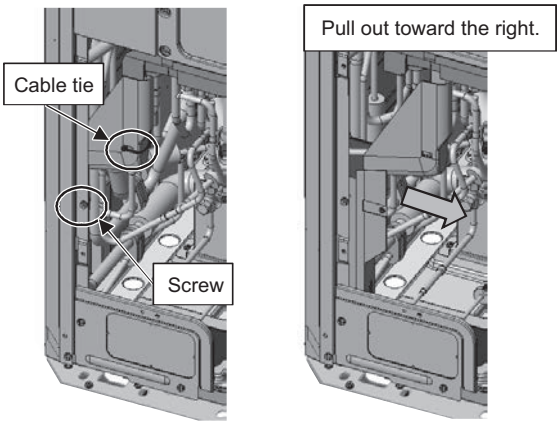

Figure 3

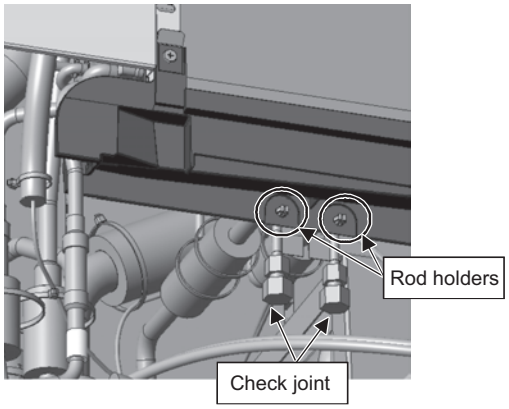

Figure 4

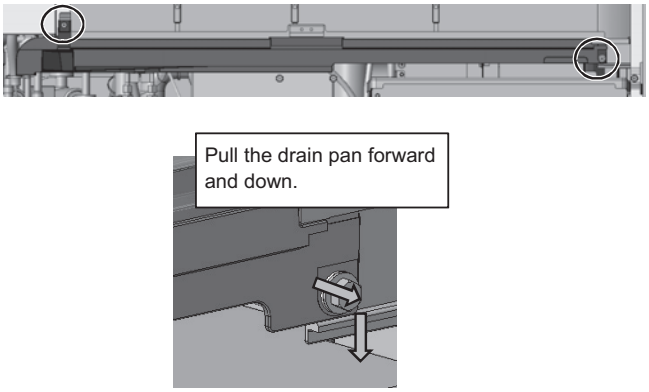

Figure 5

Figure 6

[Drain pan mounting procedure]

*Reuse the drain pan mounting screws from the replaced drain pan. (M5 x 16 mm with a nylon washer)

(1) Screw down the drain pan with two screws. (See Figure 7.)
(2) Hold the check joints to the drain pan with two rod holders. (See Figure 8.)
(3) Make sure that the silicon tube is properly placed on the defrost pipe, and then place the drain pan cover.
Place the drain pan cover along the defrost pipe, and fit it to the drain pan. (See Figures 9 and 10.)
(4) Thread a cable tie through the rectangle hole on the screwed-down drain cover, and hold the silicon tube and the defrost pipe together in place. (See Figure 11.)
(5) Screw down the fin guards, center pillar, and front panel with 14 screws. (See Figure 12.)

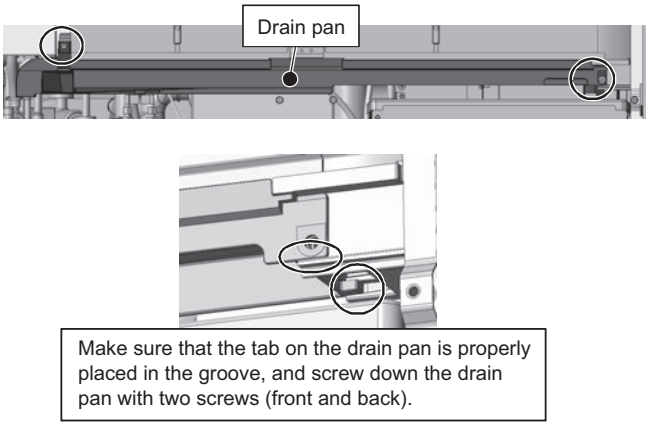

Figure 7

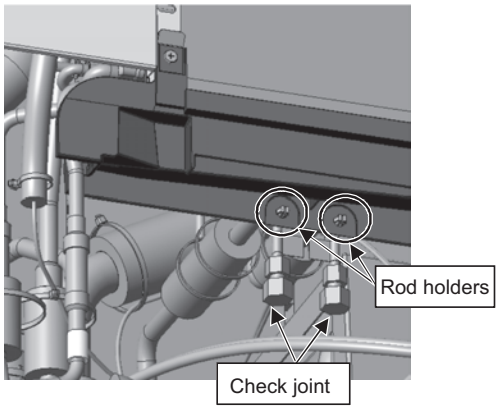

Figure 8

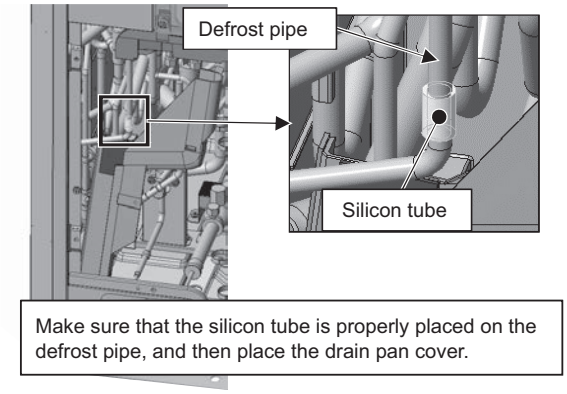

Figure 9

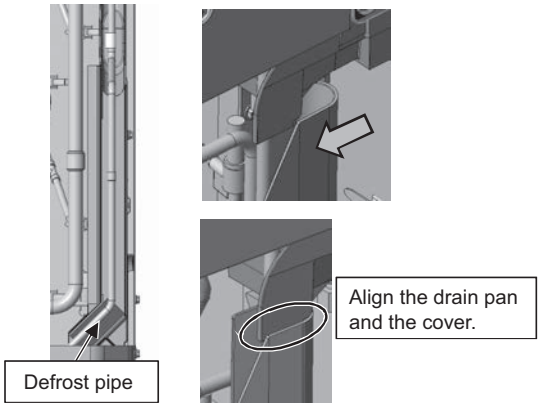

Figure 10

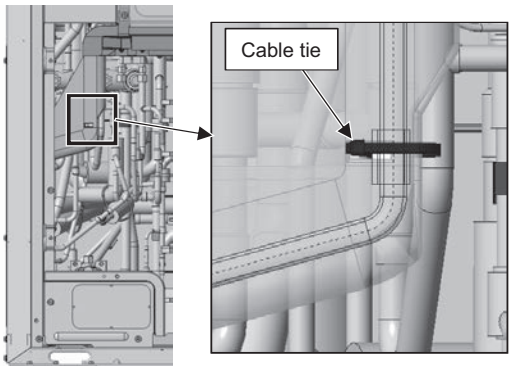

Figure 11

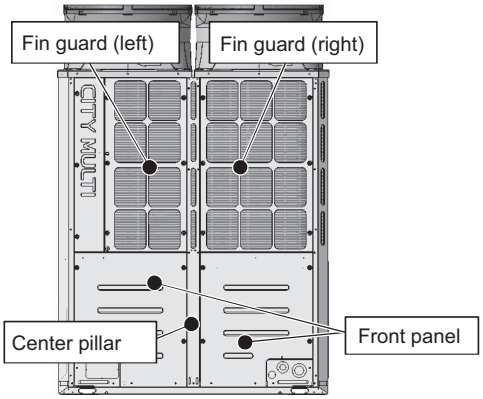

Figure 12

3. XL/EXL-module

[Drain pan removal procedure]

(1) Remove the front panel from the unit by unscrewing the 14 screws. (See Figure 1.)
(2) Remove the external temperature sensor wiring from the left drain pan by cutting the two cable ties.
Unhook the pipe cover from the left drain pan. (See Figure 3.)
(3) Remove the left drain pan by unscrewing the two screws. (See Figure 4.)
(4) Remove the right drain pan by unscrewing the two screws. (See Figure 5.)
(5) Clean inside the right and left drain pans. (See Figure 6.)
Remove dust and dirt from the drain groove.

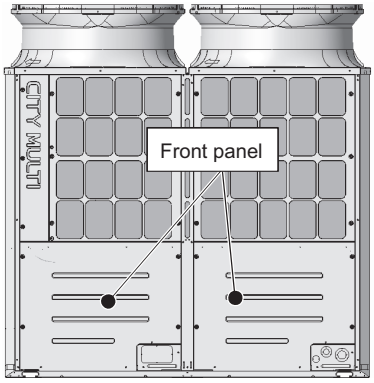

Figure 1

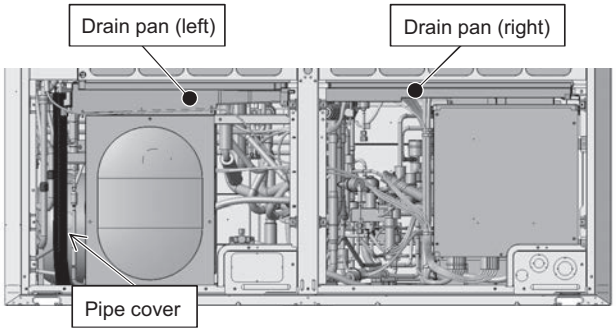

Figure 2

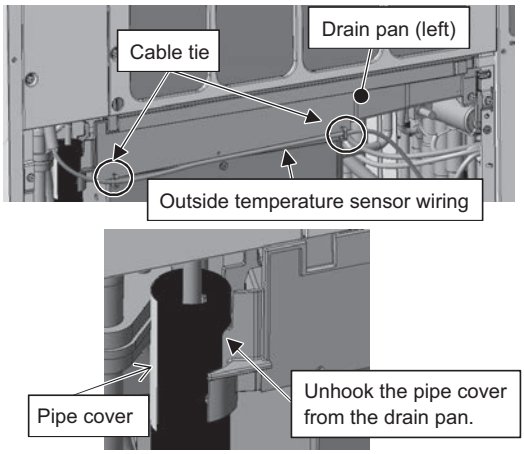

Figure 3

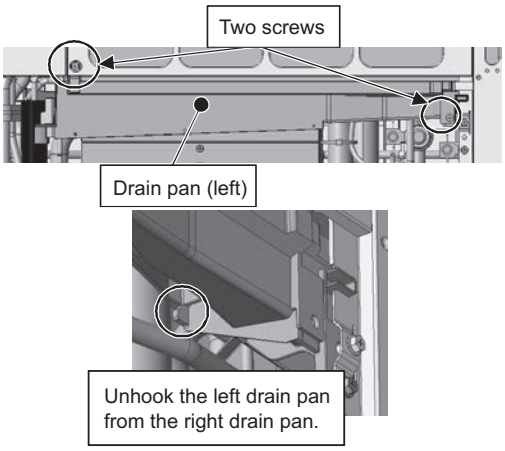

Figure 4

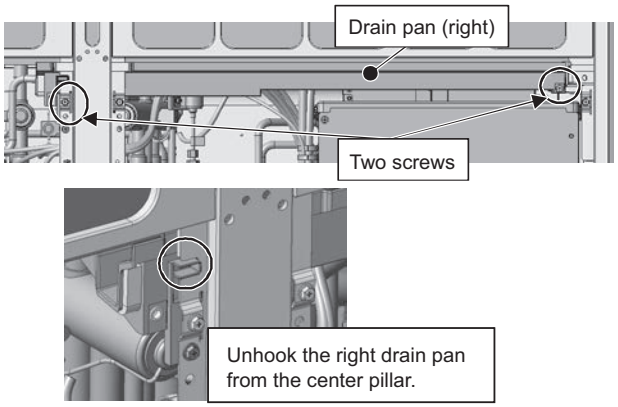

Figure 5

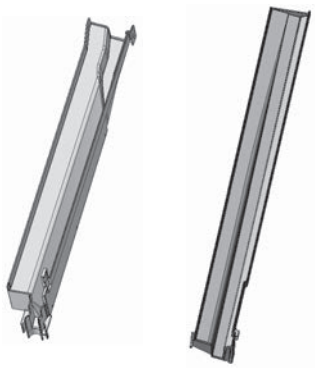

Figure 6

[Drain pan mounting procedure]

*Reuse the drain pan mounting screws that were removed from the replaced drain pan. (M5 x 16 mm with a nylon washer)

(1) Screw down the right drain pan with two screws. (See Figure 7.)
(2) Screw down the left drain pan with two screws. (See Figure 8.)
(3) Hook the pipe cover on the left drain pan. (See Figure 9.)
(4) Hold the external temperature sensor wiring to the left drain pan with two cable ties. (See Figure 10.)
(5) Screw down the front panel. (See Figure 11.)

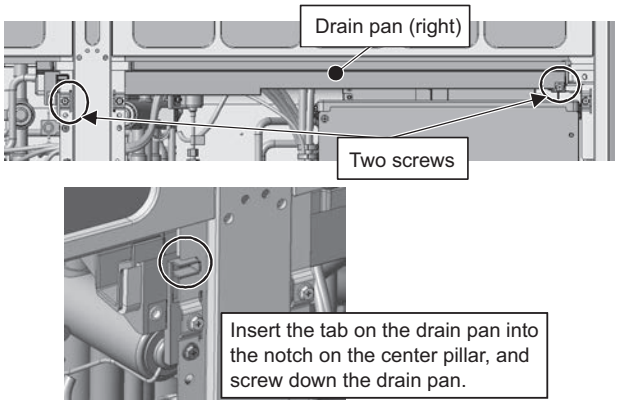

Figure 7

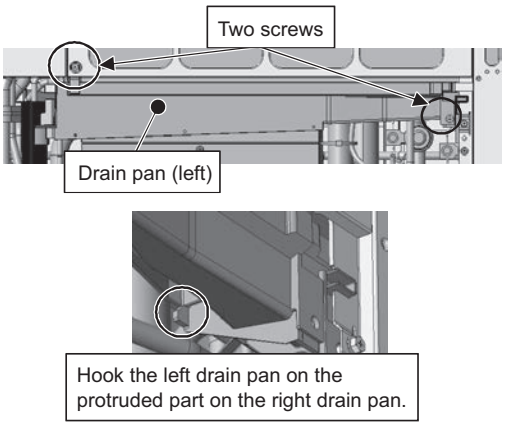

Figure 8

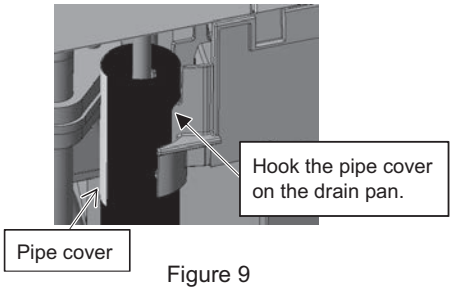

Figure 9

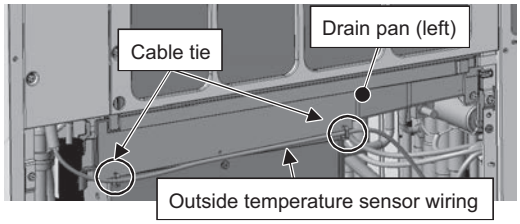

Figure 10

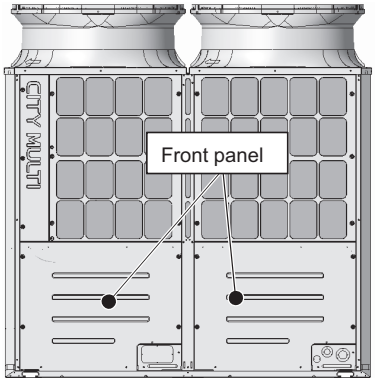

Figure 11

8-13-13 Maintenance Procedures for the Heat Exchanger <Type A/Type A1>

1. S-module

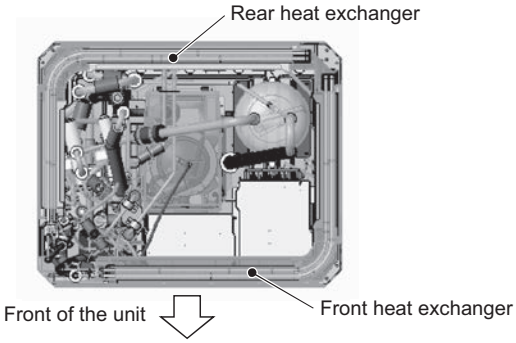

Figure 1

(1) Remove the front panel from the unit by unscrewing the 8 screws. (See Figure 2.)
(2) Remove the fin guard by unscrewing the 6 screws. (See Figure 2.)
(3) Remove the drain cover by unscrewing the screw and cutting the cable tie. (See Figures 3 and 4.)
When re-placing the drain pan cover, make sure that the silicon tube is properly placed on the defrost pipe, and then fix the drain pan cover in place with a cable tie.
(4) Remove the drain pan by unscrewing the 2 screws. (See Figure 2.)
Be sure to remove the two rod holders holding the check joints to the drain pan. (See Figure 4.)

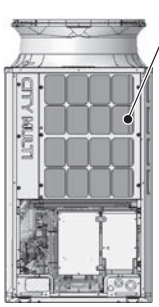

Figure 2

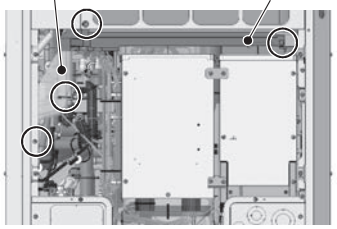

Figure 3

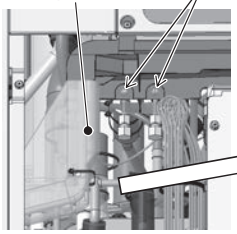

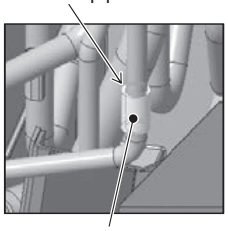

Figure 4

(5) Remove the top attachment that connects the main control box to the inverter control box by unscrewing the 2 screws. (See Figure 5.)
(6) Remove the cover from the inverter control box by unscrewing the 3 screws. (See Figure 5.)
(7) Remove the cable straps to disconnect the wiring. (See Figure 6.)

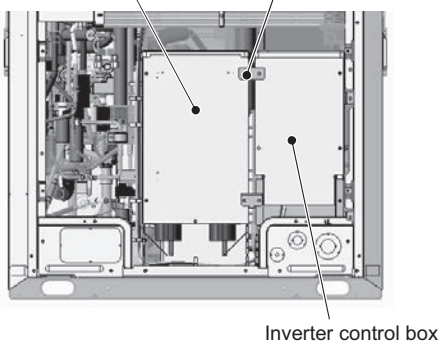

Figure 5

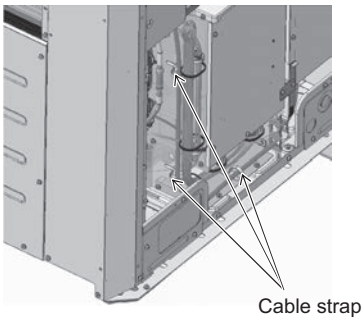

Figure 6

(8) Remove the fin guards and wiring covers from the right, left, and rear of the unit casing. (18 screws as shown in Figure 7.)

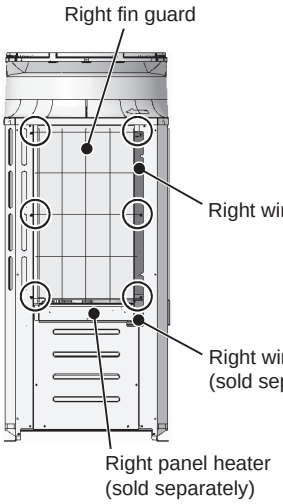

Figure 7 Right

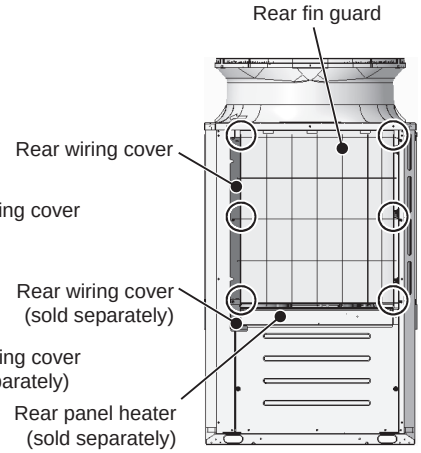

Figure 7 Rear

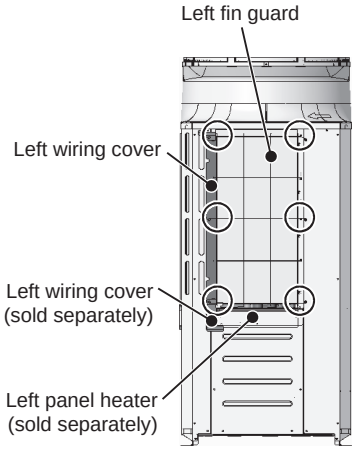

Figure 7 Left

(9) If a separately sold panel heater is installed, disconnect the connectors of the panel heater wiring. Bundle the excessive disconnected panel heater wiring with adhesive tape or other materials. (3 locations as shown in Figure 8.)

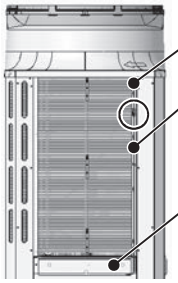

Figure 8 Right

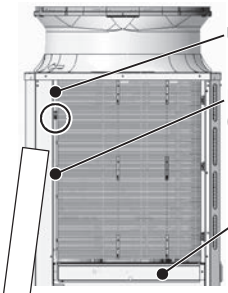

Figure 8 Rear

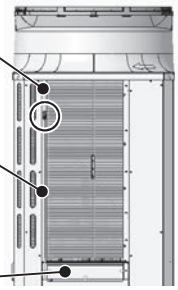

Figure 8 Left

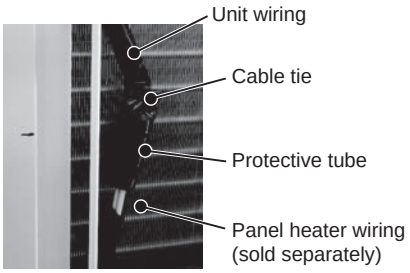

Before removing the protective tube

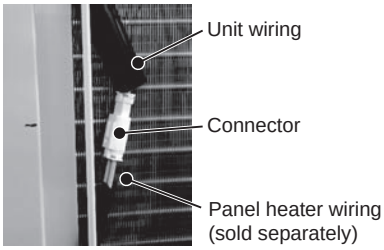

After removing the protective tube

(10) Remove the fan guard by unscrewing the 6 screws. (See Figure 9.)
(11) Insert a spacer between the main control box and the heat exchanger.
(12) Remove the cable tie that is holding the motor ASSY and the unit wiring.
Remove the motor ASSY by unscrewing the eight screws, using caution not to disconnect the motor wiring or not to damage the fan. (See Figure 10.)

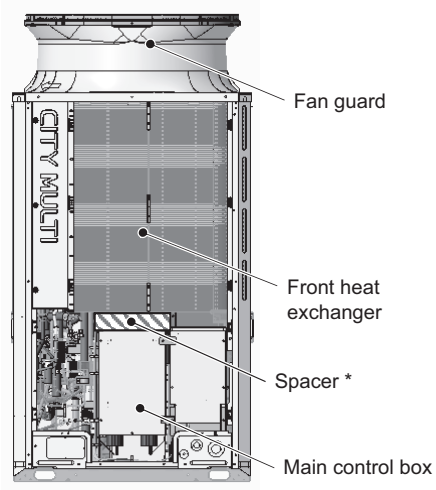

Figure 9

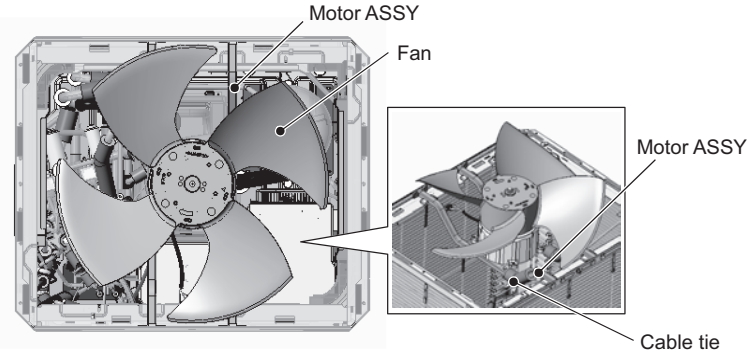

Figure 10

*Use the supplied spacers.
Use the spacers 60 (D) X 250 (W) X 60 (H) when replacing the heat exchangers for the maintenance of the accumulator and the pipes.

(13) Remove the unit wiring from the left frame (See Figure 11).
Bundle all excess unit wirings including those that have been removed so that they do not interfere with the replacement of the heat exchanger.
(14) Remove the front pillar by unscrewing the 7 screws. (See Figure 12.)
(15) Disconnect the TH7 sensor holder from the front pillar. (See Figure 12 Rear.)
(16) Remove the TH7 wiring from the front heat exchanger by cutting the cable tie. (See Figure 13.)

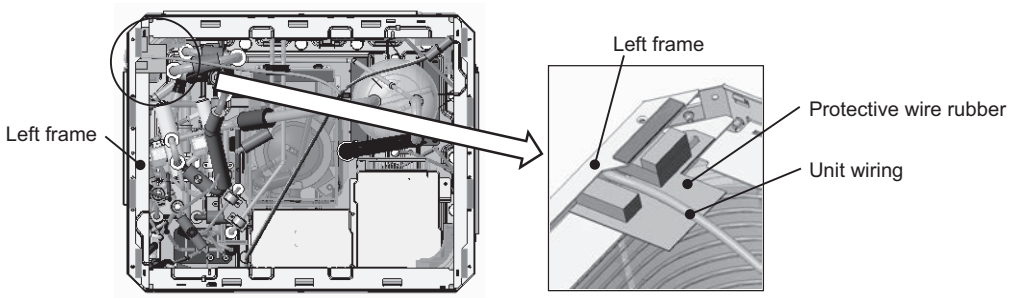

Figure 11

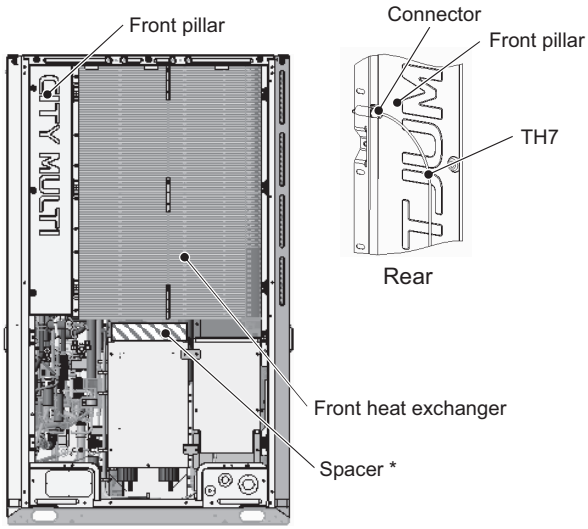

Figure 12

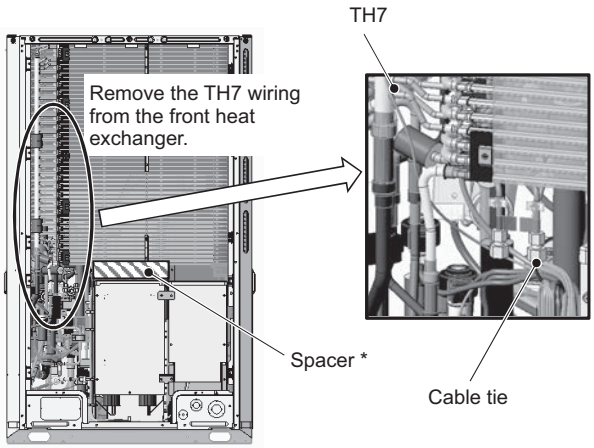

Figure 13

(17) To remove the front heat exchanger, first remove the front, left, and right frames by unscrewing the 10 screws. (See Figure 14.)
To remove the rear heat exchanger, remove the rear frame in addition to the front, left, and the right frames by unscrewing the 12 screws. (See Figure 14.)
(18) Unscrew the two screws each on the right and left panels. (See Figure 15 Right and Left.)
(19) Remove the left front pillar by unscrewing the 9 screws on a standard model or 10 screws on a high-efficiency model. (See Figure 15 Front and Left.)
(20) Remove the right front pillar by unscrewing the 5 screws. (See Figure 15 Front and Right.)

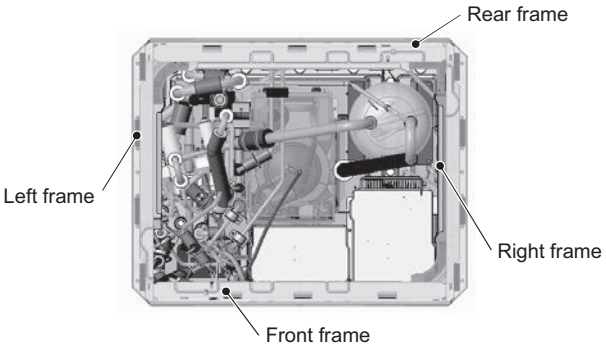

Figure 14

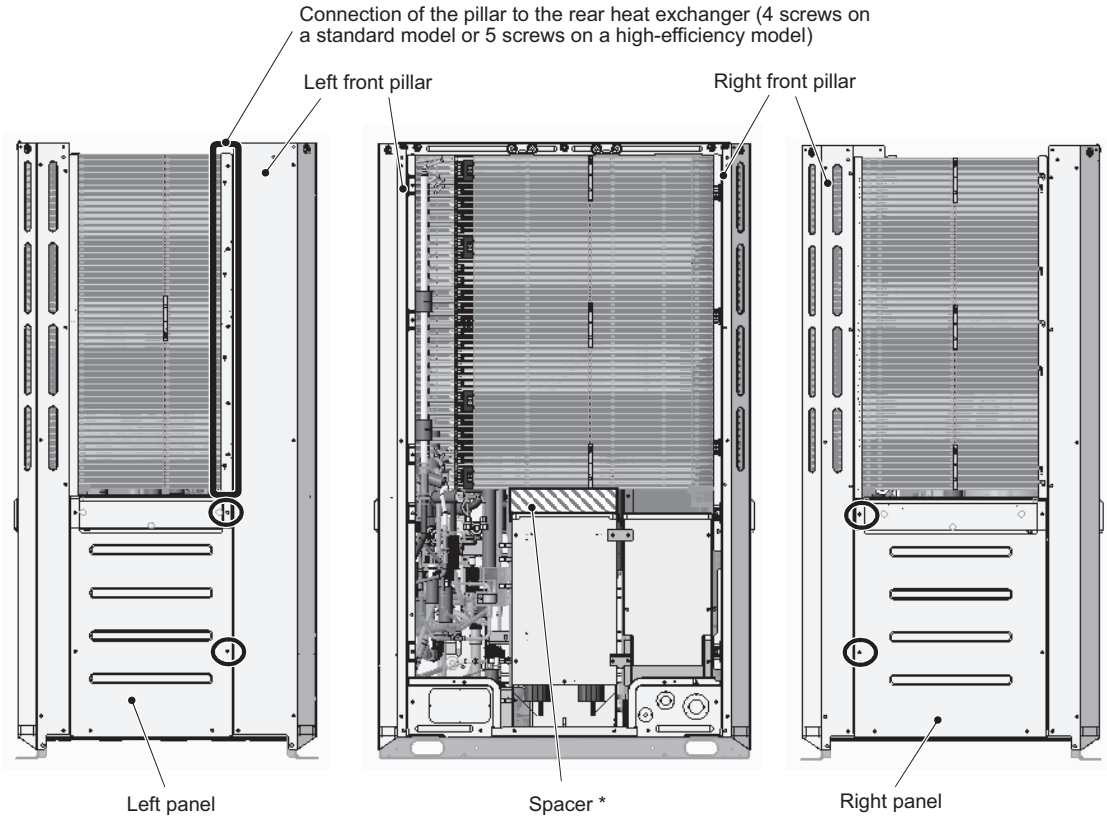

Figure 15 Left
Figure 15 Front
Figure 15 Right

*Use the supplied spacers. Use the spacers 60 (D) X 250 (W) X 60 (H) when replacing the heat exchangers for the maintenance of the accumulator and the pipes.

(21) Before removing the front heat exchanger, protect the surrounding electrical components and the pipe cover with a recommended cloth soaked in water, and then remove the braze from four areas. (See Figures 16 and 17.)
To remove the rear heat exchanger, remove the braze from four areas. (See Figures 18 and 19.)

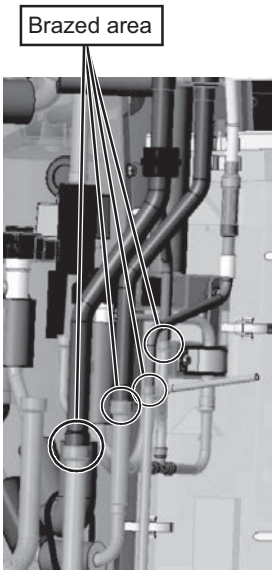

Removal of the front heat exchanger on a high-efficiency model (Figure 16)

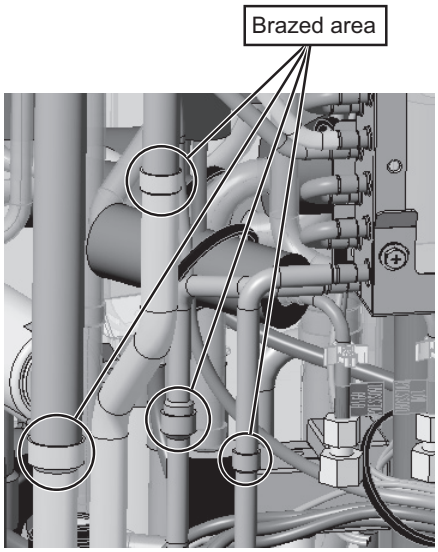

Removal of the front heat exchanger on a standard model (Figure 17)

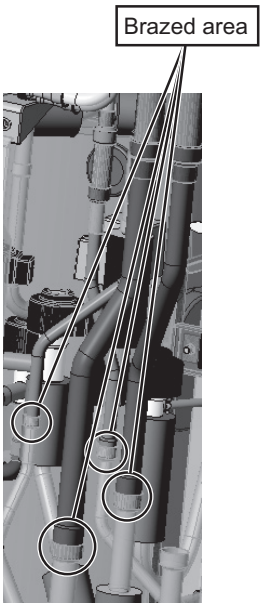

Removal of the rear heat exchanger on a high-efficiency model (Figure 18)

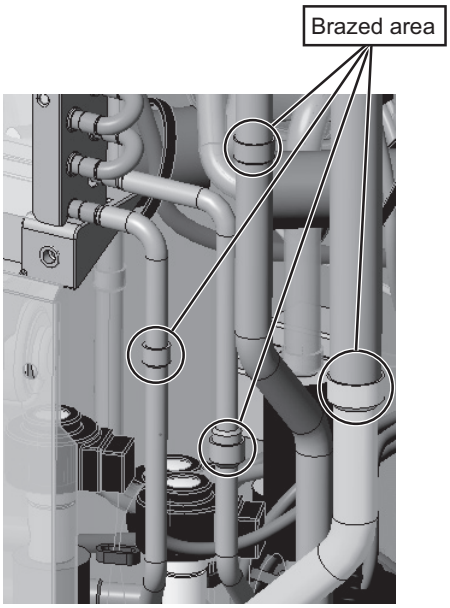

Removal of the rear heat exchanger on a standard model (Figure 19)

Notes for replacing refrigerant circuit components (heat exchanger)
- Be sure to perform non-oxidized brazing.
- After brazing is done, check that the brazing is done properly and check for leaks before vacuum-drying the pipes.
- Direct the brazing torch flame away from the wiring and sheet metals inside the unit not to damage them.
- Place the wet felt sheets listed below (or their equivalents) around the areas to be brazed to protect the heat exchanger, pipes, and pipe covers from being damaged from the brazing torch flame.
  Recommended felt sheets: Spatter felt 50CF-11 (5t x 1 m x 1 m) by TRUSCO Nakayama
  Felt sheets that meet the JIS standard (JIS A 1323 type A "Flame retardant testing method for spark droplets of welding and gas cutting on fabric sheets in construction works")

(22) To remove the front heat exchanger, loosen the screws on the right side of the right rear pillar. (4 screws on a standard model or 3 screws on a high-efficiency model) (See Figure 20.)
To remove the rear heat exchanger, loosen the screws on the back of the right rear pillar. (4 screws on a standard model or 3 screws on a high-efficiency model) (See Figure 21.)

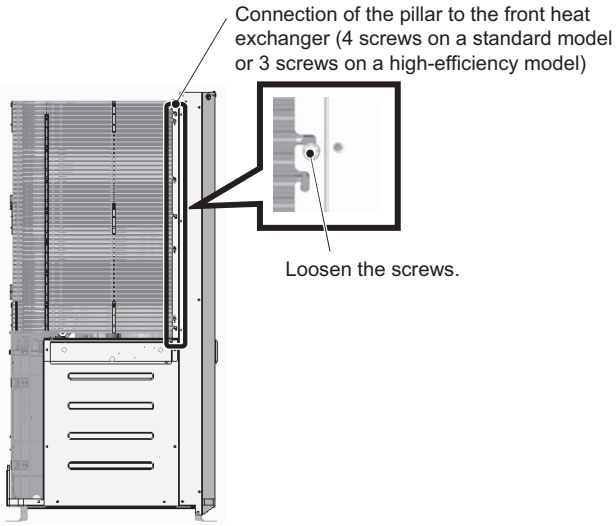

Removing the front heat exchanger
(Figure 20)

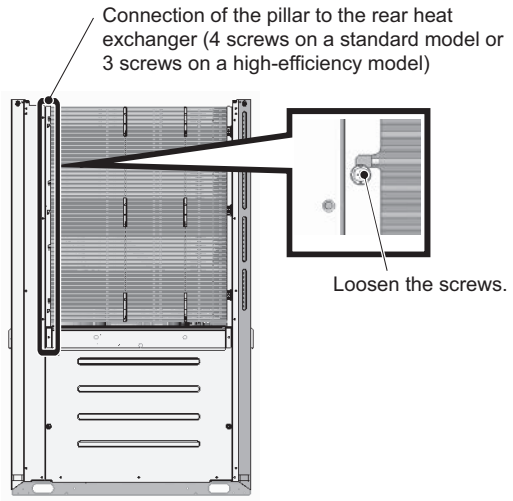

Removing the rear heat exchanger
(Figure 21)

(23) Remove the heat exchanger by diagonally lifting it up, using caution not to damage the fins or the pipes.

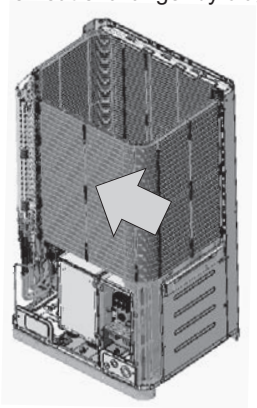

Removing the front heat exchanger
(Figure 22)

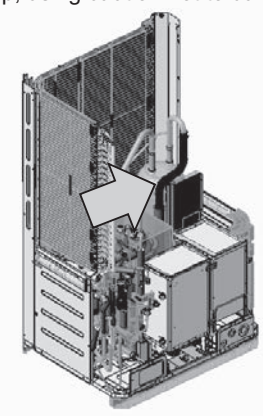

Removing the rear heat exchanger
(Figure 23)

(24) Re-place the front and the rear heat exchangers in the reverse order as they were removed.
Re-place the components that were removed as they were.
Re-place each unit wiring according to the wiring color and identification label (attached to the wiring protective tube) shown in the table below.

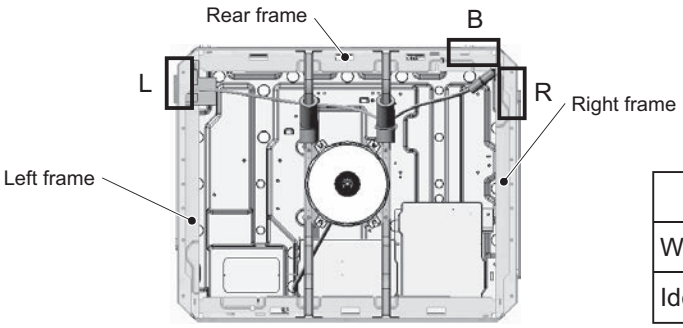

Figure 24

	L	R	B
Wiring color	Yellow	Blue	White
Identification label	S-L	S-R	S-B

2. L-module

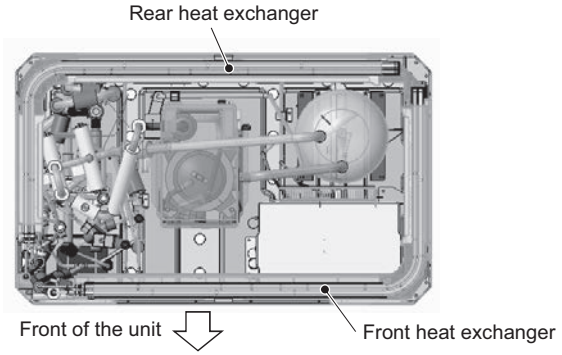

Figure 1

(1) Remove the two front panels from the unit by unscrewing the 14 screws. (See Figure 2.)
(2) Remove the fin guard by unscrewing the 12 screws. (See Figure 2.)
(3) Remove the cable straps holding the weak and strong electrical wirings. (See Figure 3.)
(4) Remove the center pillar by unscrewing the 5 screws. (See Figure 2.)
(5) Remove the drain cover by unscrewing the screw and cutting the cable tie. (See Figures 3 and 4.)
When re-placing the drain pan cover, make sure that the silicon tube is properly placed on the defrost pipe, and then fix the drain pan cover in place with a cable tie.
(6) Remove the drain pan by unscrewing the 2 screws. (See Figure 3.)
Be sure to remove the two rod holders holding the check joints to the drain pan. (See Figure 4.)

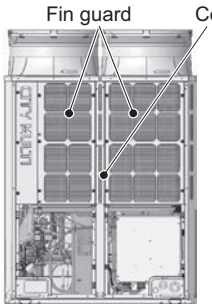

Figure 2

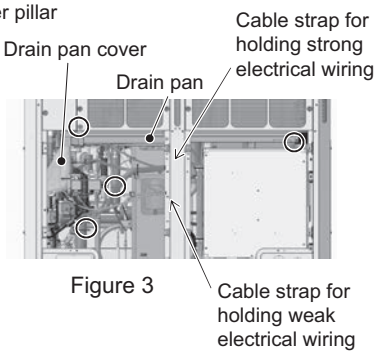

Figure 3

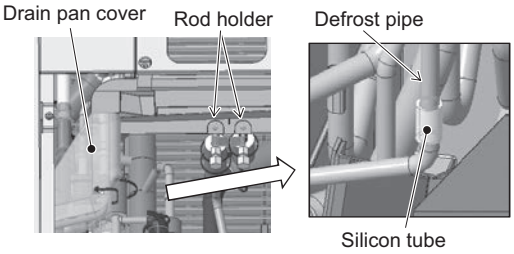

Figure 4

(7) Remove the cover from the control box by unscrewing the 5 screws. (See Figure 5.)
(8) Remove the cable straps to disconnect the wiring. (See Figure 6.)

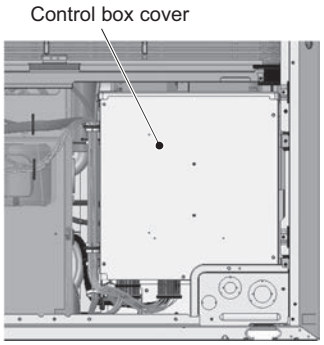

Figure 5

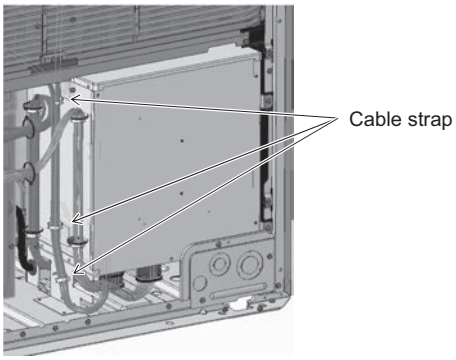

Figure 6

(9) Remove the fin guards and wiring covers from the right, left, and rear of the unit casing. (24 screws as shown in Figure 7.)

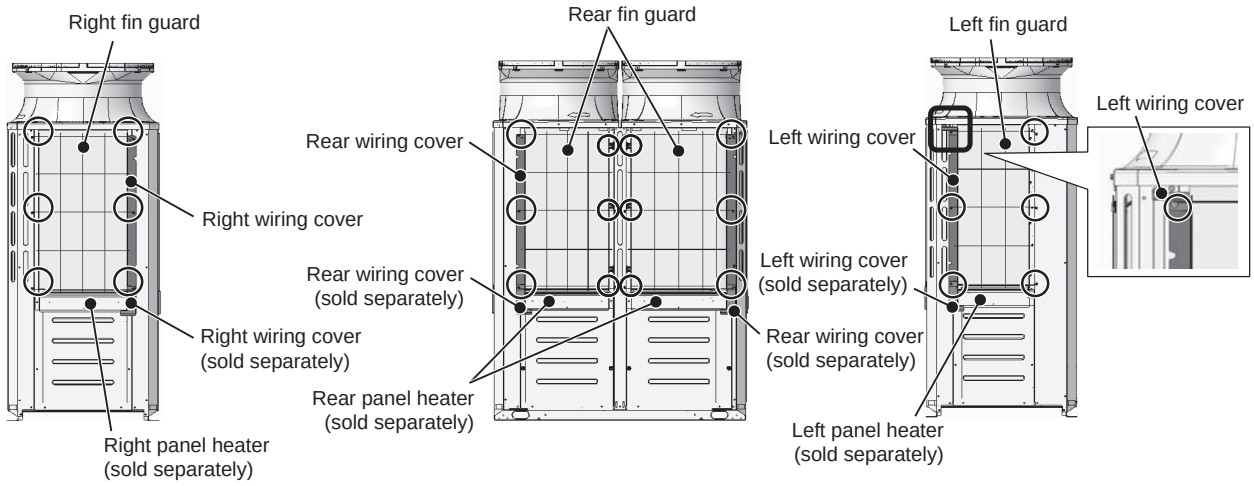

Figure 7 Right Figure 7 Rear Figure 7 Left

(10) If a separately sold panel heater is installed, disconnect the connectors of the panel heater wiring. Bundle the excessive disconnected panel heater wiring with adhesive tape or other materials. (4 locations as shown in Figure 8.)

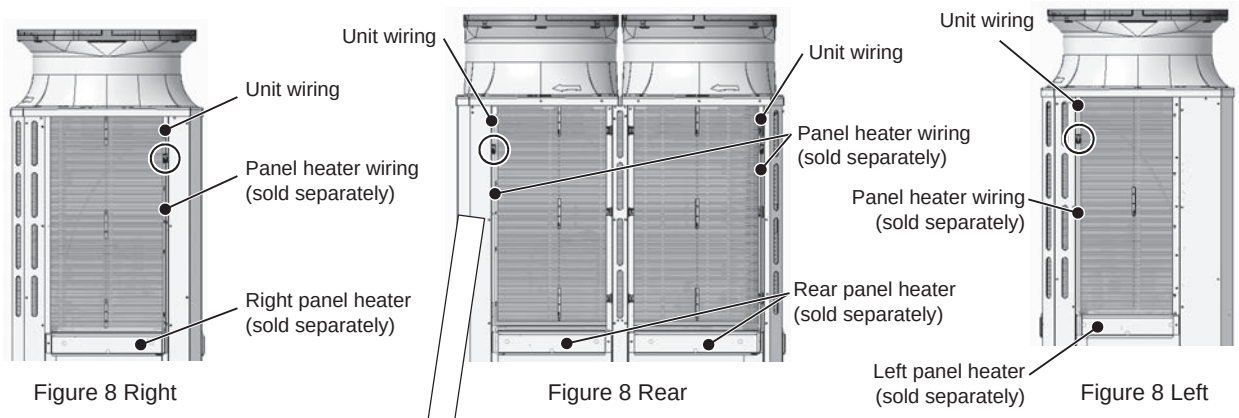

Figure 8 Right Figure 8 Rear Figure 8 Left

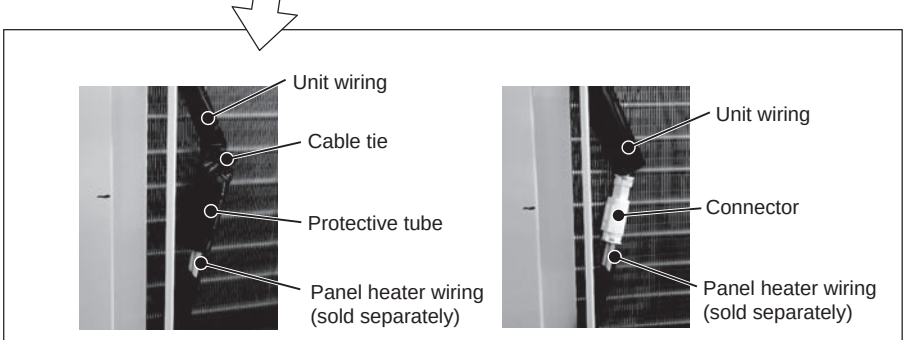

Before removing the protective tube After removing the protective tube

(11) Remove the fan guard by unscrewing the 12 screws. (See Figure 9.)
(12) Insert a spacer between the control box and the heat exchanger.
(13) Remove the cable tie that is holding the motor ASSY and the unit wiring.
Remove the motor ASSY by unscrewing the 16 screws, using caution not to disconnect the motor wiring or not to damage the fan. (See Figure 10.)

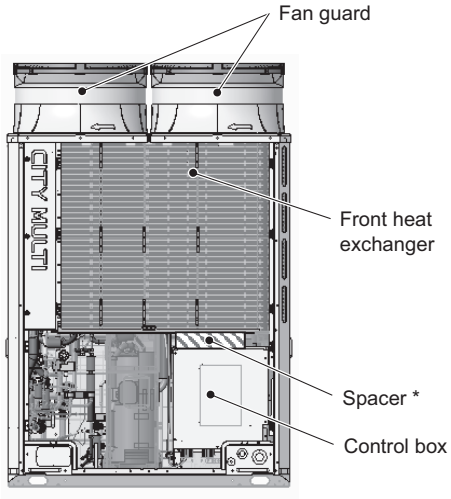

Figure 9

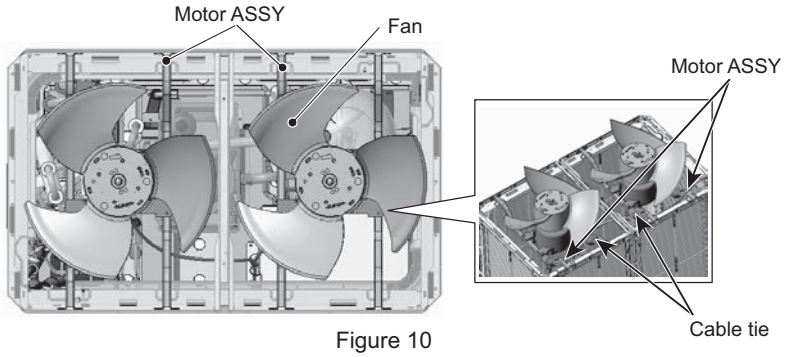

Figure 10

*Use the supplied spacers.
Use the spacers 60 (D) x 250 (W) x 60 (H) when replacing the heat exchangers for the maintenance of the accumulator and the pipes.

(14) Remove the unit wiring from the left frame (See Figure 11).
Bundle all excess unit wirings including those that have been removed so that they do not interfere with the replacement of the heat exchanger.
(15) Remove the front pillar by unscrewing the 7 screws. (See Figure 12.)
(16) Disconnect the TH7 sensor holder from the front pillar. (See Figure 12 Rear.)
(17) Remove the TH7 wiring from the heat exchanger by cutting the cable tie. (See Figure 13.)

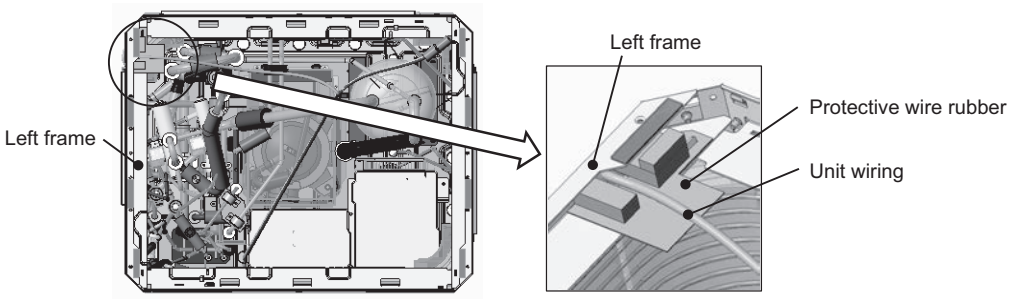

Figure 11

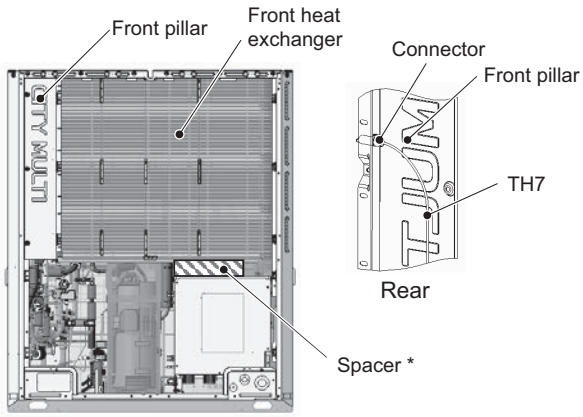

Figure 12

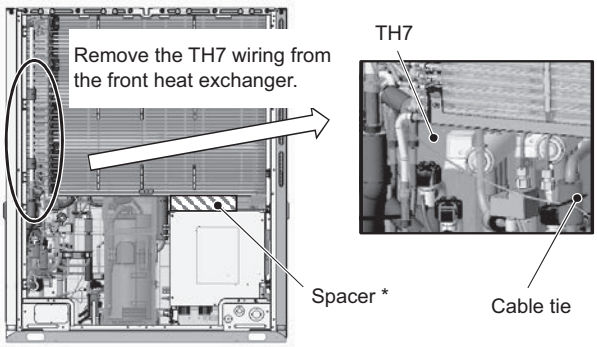

Figure 13

(18) To remove the front heat exchanger, first remove the front, left, right, and center frames by unscrewing the 14 screws. (See Figure 14.)
To remove the rear heat exchanger, remove the rear frame in addition to the front, left, right, and center frames by unscrewing the 16 screws. (See Figure 14.)
(19) Unscrew the two screws each on the right and left panels. (See Figure 15 Right and Left.)
(20) Remove the left front pillar by unscrewing the 9 screws on a standard model or 10 screws on a high-efficiency model. (See Figure 15 Front and Left.)
(21) Remove the right front pillar by unscrewing the 5 screws. (See Figure 15 Front and Right)

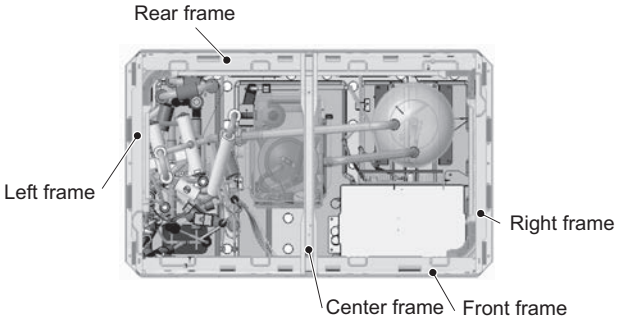

Figure 14

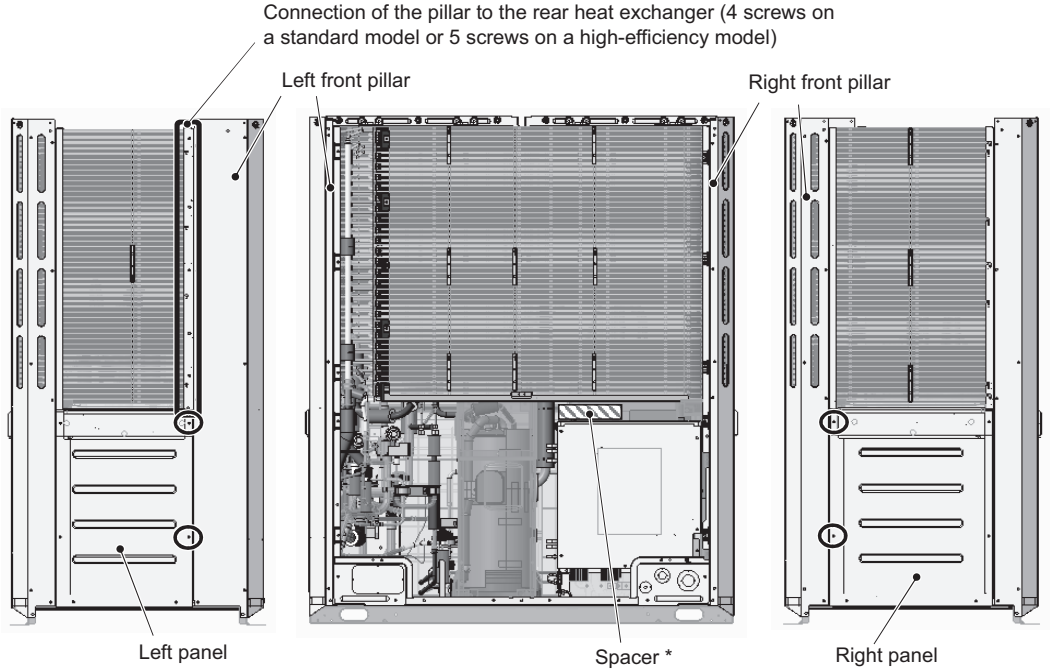

Figure 15 Left　　Figure 15 Front　　Figure 15 Right

*Use the supplied spacers. Use the spacers 60 (D) X 250 (W) X 60 (H) when replacing the heat exchangers for the maintenance of the accumulator and the pipes.

(22) Before removing the front heat exchanger, protect the surrounding electrical components and the pipe cover with a recommended felt soaked in water, and then remove the braze from four areas. (See Figures 16 and 17.)
To remove the rear heat exchanger, remove the braze from four areas. (See Figures 18 and 19.)

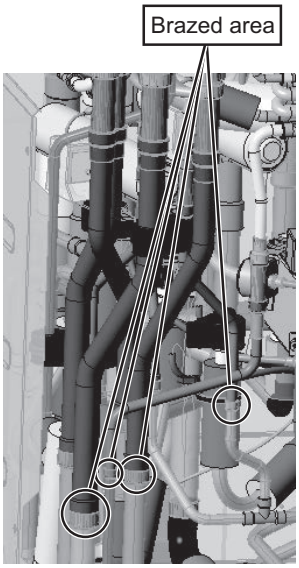

Removal of the front heat exchanger on a high-efficiency model (Figure 16)

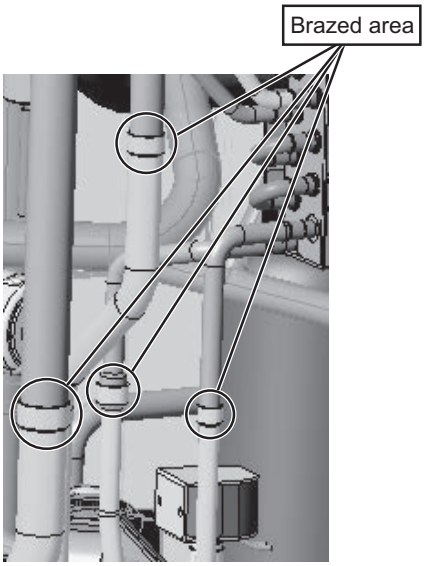

Removal of the front heat exchanger on a standard model (Figure 17)

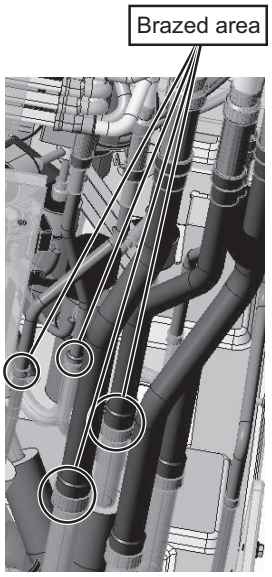

Removal of the rear heat exchanger on a high-efficiency model (Figure 18)

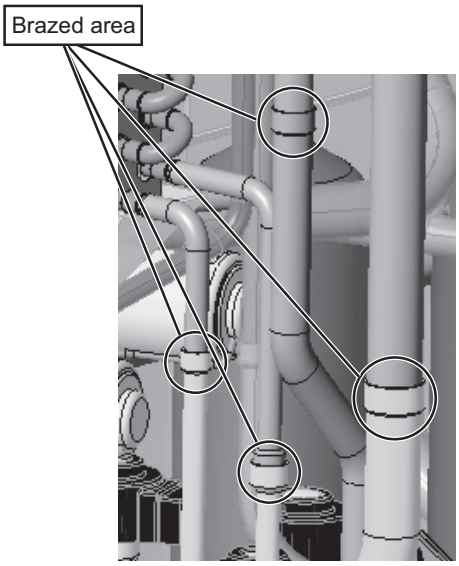

Removal of the rear heat exchanger on a standard model (Figure 19)

Notes for replacing refrigerant circuit components (heat exchanger)
- Be sure to perform non-oxidized brazing.
- After brazing is done, check that the brazing is done properly and check for leaks before vacuum-drying the pipes.
- Direct the brazing torch flame away from the wiring and sheet metals inside the unit not to damage them.
- Place the wet felt sheets listed below (or their equivalents) around the areas to be brazed to protect the heat exchanger, pipes, and pipe covers from being damaged from the brazing torch flame.
  Recommended felt sheets: Spatter felt 50CF-11 (5t x 1 m x 1 m) by TRUSCO Nakayama
  Felt sheets that meet the JIS standard (JIS A 1323 type A "Flame retardant testing method for spark droplets of welding and gas cutting on fabric sheets in construction works")

(23) To remove the front heat exchanger, loosen the screws on the right side of the right rear pillar. (4 screws on a standard model or 3 screws on a high-efficiency model) (See Figure 20.)
To remove the rear heat exchanger, loosen the screws on the back of the right rear pillar. (4 screws on a standard model or 3 screws on a high-efficiency model) (See Figure 21.)
Remove the screw holding the pillar to the rear heat exchanger support.

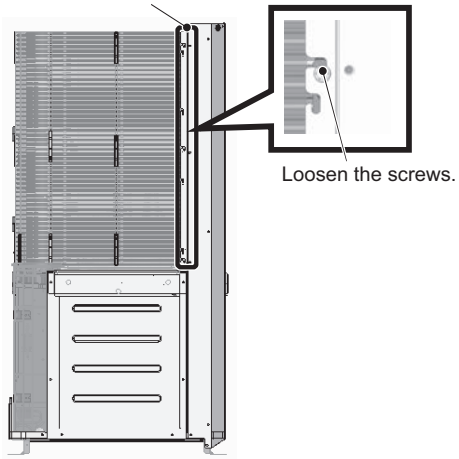

Removing the front heat exchanger
(Figure 20)

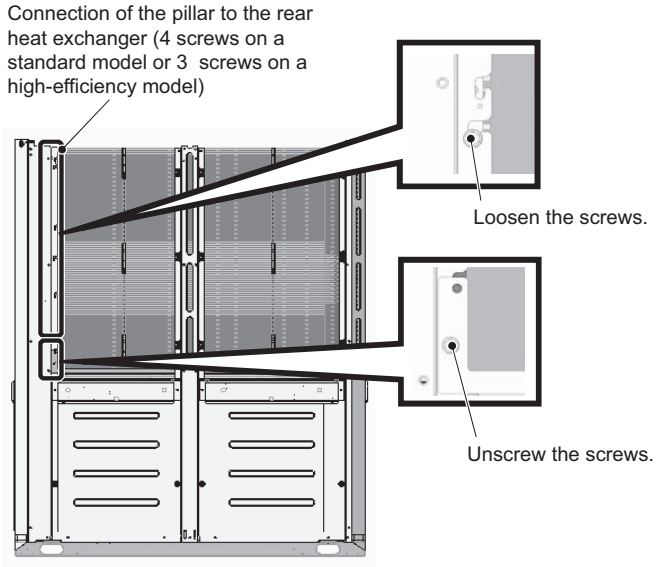

Removing the rear heat exchanger
(Figure 21)

(24) Remove the heat exchanger by diagonally lifting it up, using caution not to damage the fins or the pipes.

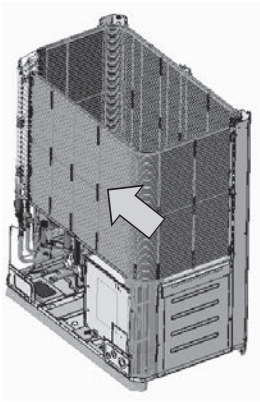

Removing the front heat exchanger
(Figure 22)

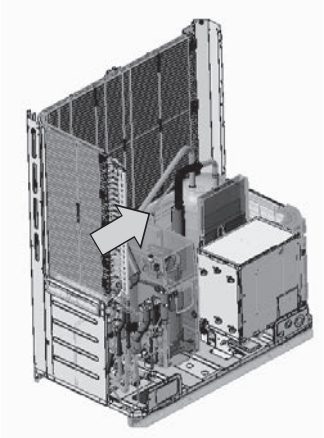

Removing the rear heat exchanger
(Figure 23)

(25) After removing the heat exchangers, dispose of the front and the rear heat exchanger supports. (See Figures 24 and 25.)
The front and the rear heat exchanger supports do not need to be installed. (The front and the rear heat exchanger supports are for suppressing vibration during transportation.)

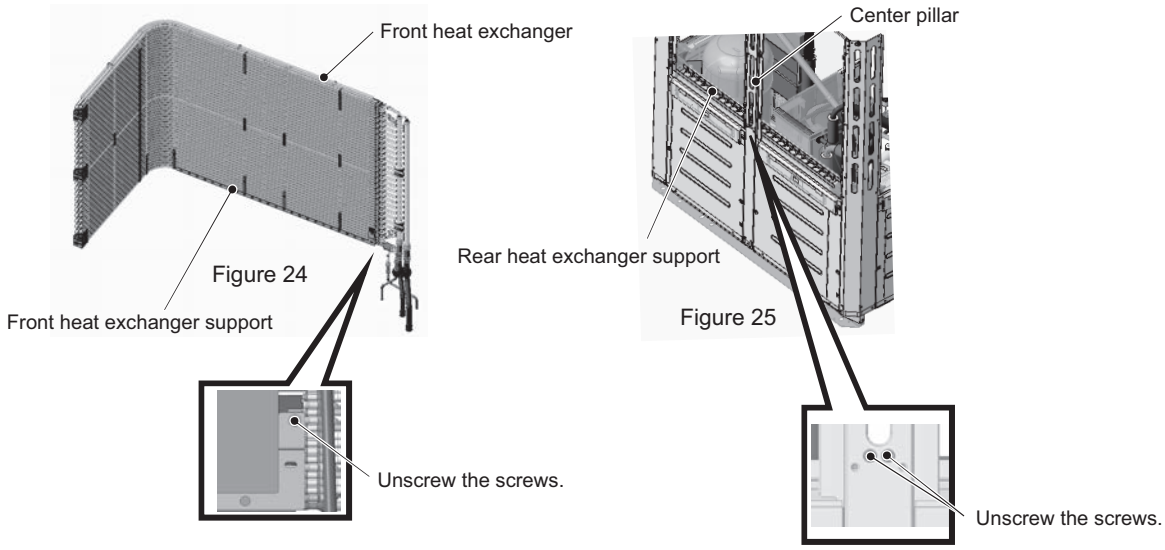

Figure 24

Figure 25

(26) Re-place the front and the rear heat exchangers in the reverse order as they were removed.
Re-place the components that were removed as they were.
Re-place each unit wiring according to the wiring color and identification label (attached to the wiring protective tube) shown in the table below.

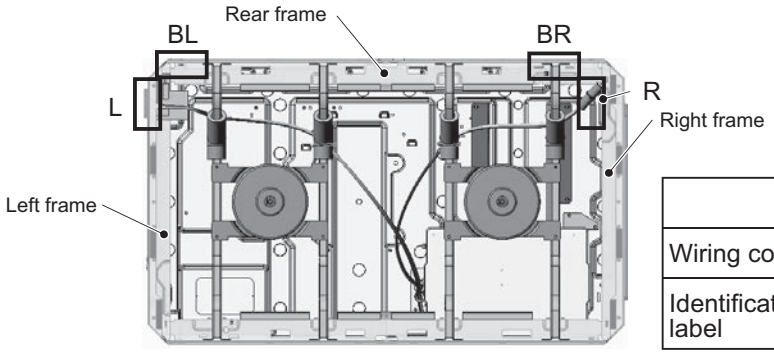

Figure 26

	L	R	BL	BR
Wiring color	Yellow	Blue	Red	White
Identification label	L-L	L-R	L-BL	L-BR

3. XL-module

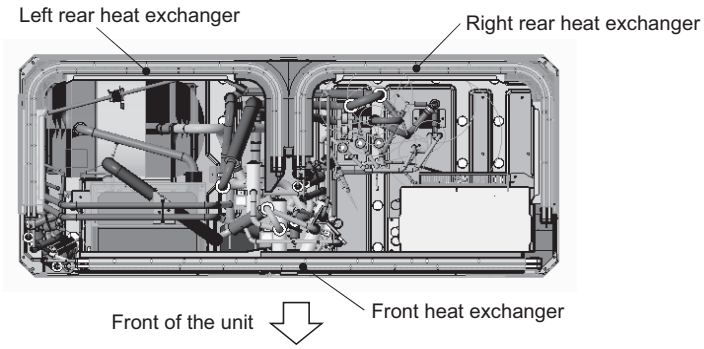

Figure 1

(1) Remove the two front panels from the unit by unscrewing the 14 screws. (See Figure 2.)
(2) Remove the fin guard by unscrewing the 12 screws. (See Figure 2.)
(3) Remove pipe cover. (See Figure 3.)
(4) Remove the left drain pan by unscrewing the two screws and cutting the two cable ties. (See Figure 3.)
(5) Remove the right drain pan by unscrewing the 2 screws. (See Figure 3.)

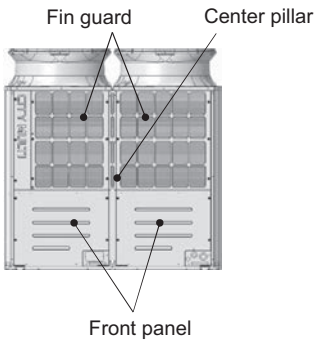

Figure 2

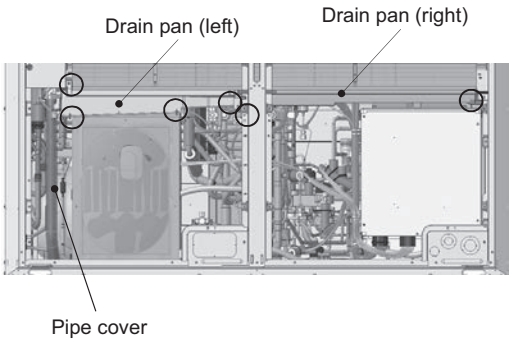

Figure 3

(6) Remove the 3 cable straps from the center pillar. (See Figure 4.)
(7) Remove the 3 cable straps holding motor wiring from the control box. (See Figure 5.)

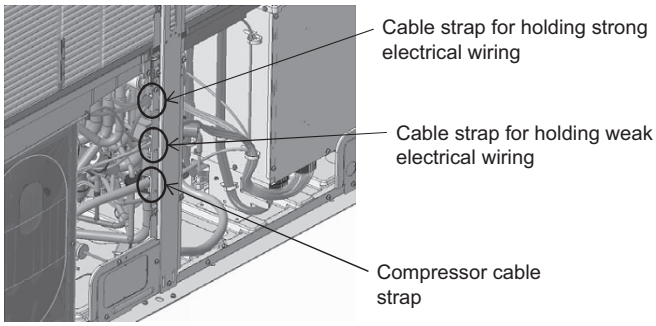

Figure 4

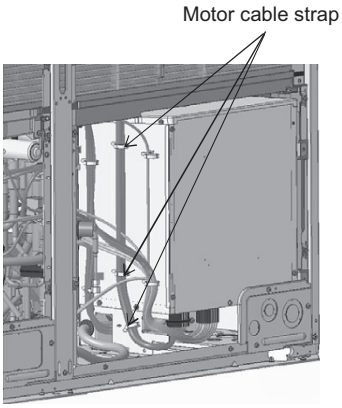

Figure 5

(8) Remove the fin guards and wiring covers from the right, left, and rear of the unit casing. (24 screws as shown in Figure 6.)

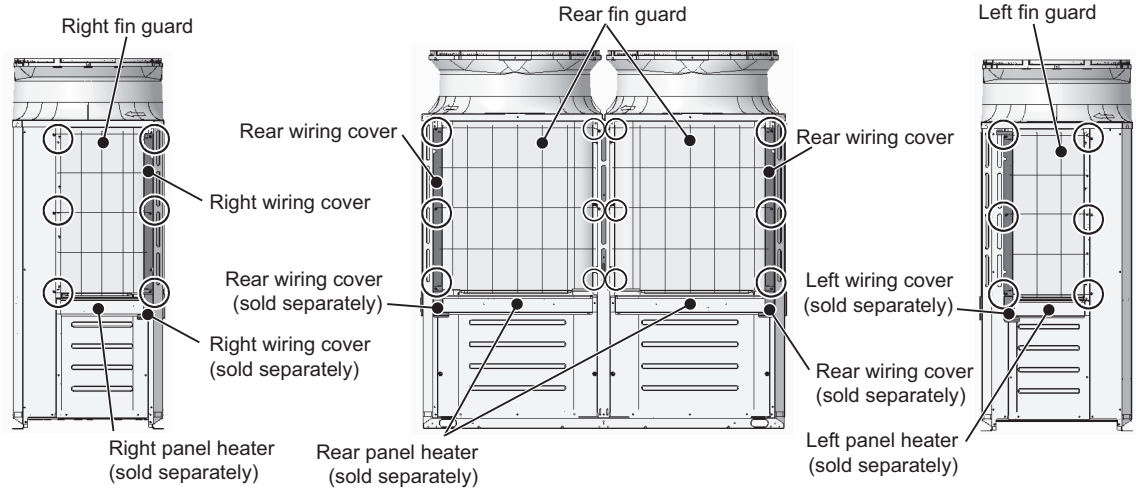

Figure 6 Right Figure 6 Rear Figure 6 Left

(9) If a separately sold panel heater is installed, disconnect the connectors of the panel heater wiring. Bundle the excessive disconnected panel heater wiring with adhesive tape or other materials. (4 locations as shown in Figure 7.)

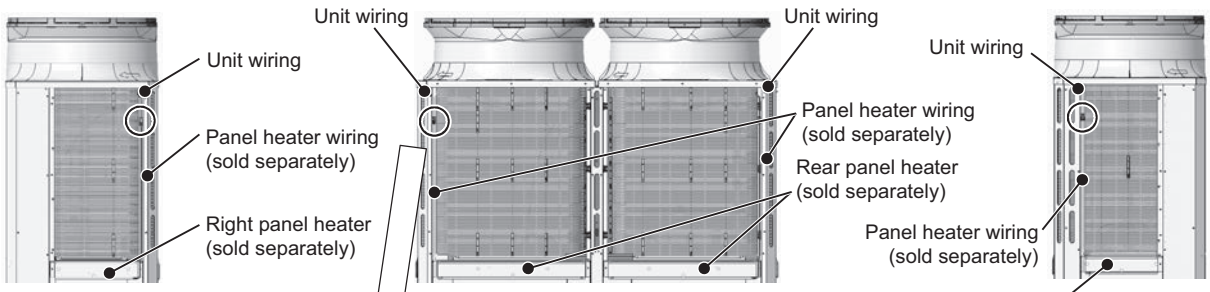

Figure 7 Right Figure 7 Rear Figure 7 Left

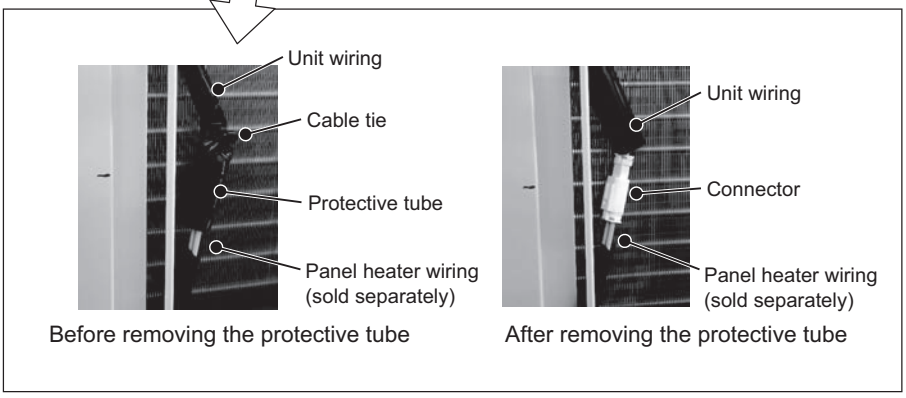

Before removing the protective tube After removing the protective tube

(10) Remove the fan guard by unscrewing the 12 screws. (See Figure 8.)
(11) Unstrap the cable from the cable strap on the middle frame. (Figure 9)
(12) Remove the cable tie that is holding the motor ASSY and the unit wiring.
Remove the motor ASSY by unscrewing the 16 screws, using caution not to disconnect the motor wiring or not to damage the fan. (See Figure 9.)

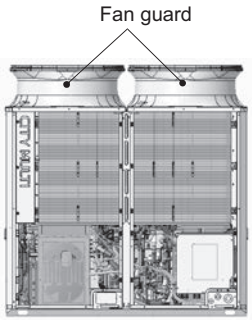

Figure 8

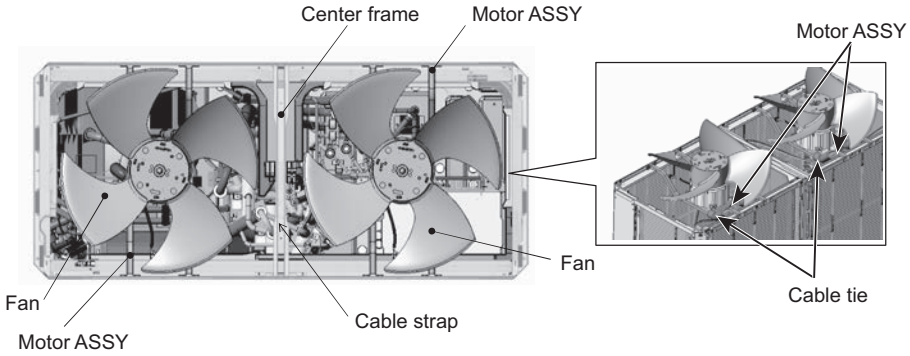

Figure 9

(13) Disconnect the unit wirings from the right and left frames. (Figure 10)
Keep all excessive wirings, including the ones disconnected from the frames, out of the way of removing the heat exchanger.

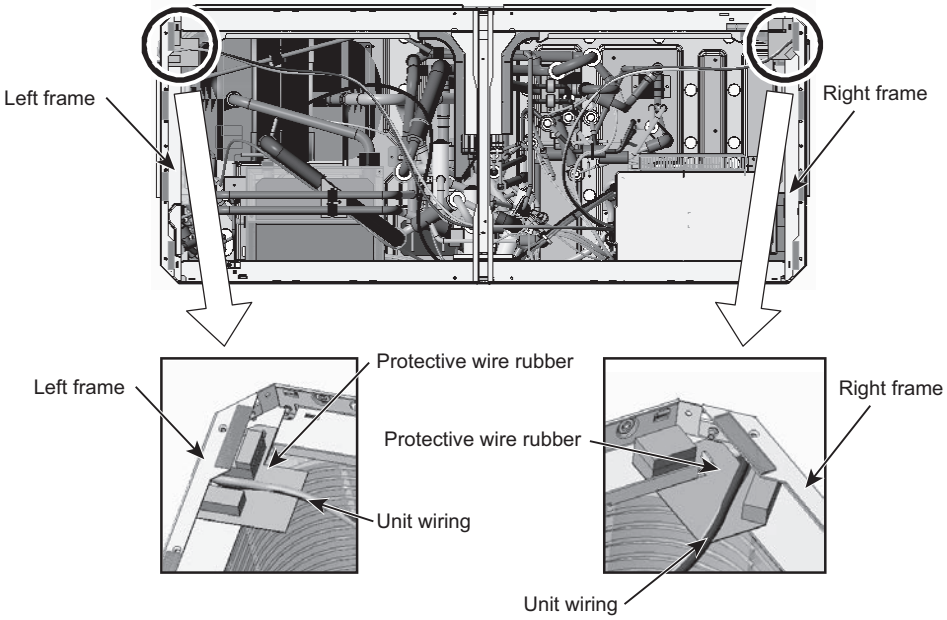

Figure 10

(14) Before removing the front heat exchanger, protect the surrounding electrical components and the pipe cover with a recommended felt soaked in water, and then remove the braze from four areas. (See Figures 11 and 12.)
To remove the right and left rear heat exchangers, remove the braze from four areas. (See Figures 13 - 16.)

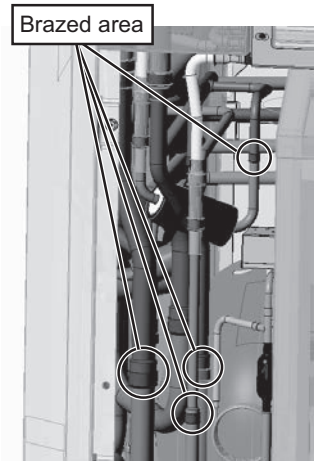

Removal of the front heat exchanger on a high-efficiency model (Figure 11)

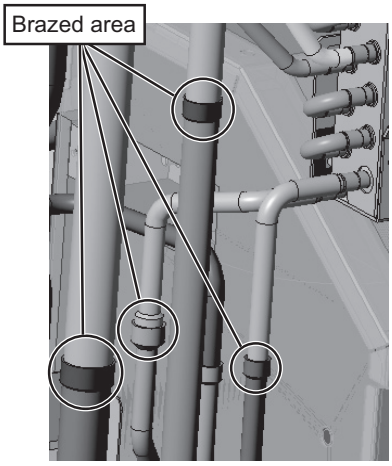

Removal of the front heat exchanger on a standard model (Figure 12)

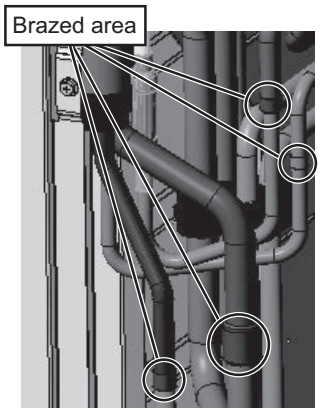

Removal of the left rear heat exchanger on a high-efficiency model (Figure 13)

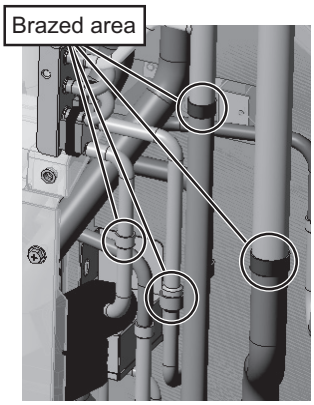

Removal of the left rear heat exchanger on a standard model (Figure 14)

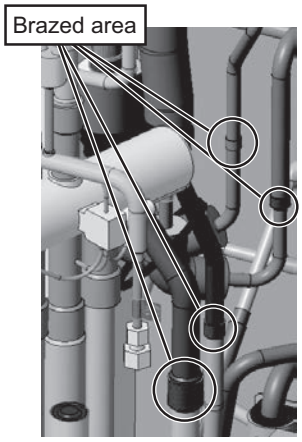

Removal of the right rear heat exchanger on a high-efficiency model (Figure 15)

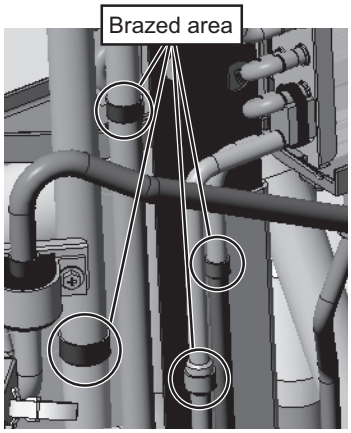

Removal of the right rear heat exchanger on a standard model (Figure 16)

Notes for replacing refrigerant circuit components (heat exchanger)
- Be sure to perform non-oxidized brazing.
- After brazing is done, check that the brazing is done properly and check for leaks before vacuum-drying the pipes.
- Direct the brazing torch flame away from the wiring and sheet metals inside the unit not to damage them.
- Place the wet felt sheets listed below (or their equivalents) around the areas to be brazed to protect the heat exchanger, pipes, and pipe covers from being damaged from the brazing torch flame.
  Recommended felt sheets: Spatter felt 50CF-11 (5t x 1 m x 1 m) by TRUSCO Nakayama
  Felt sheets that meet the JIS standard (JIS A 1323 type A "Flame retardant testing method for spark droplets of welding and gas cutting on fabric sheets in construction works")

(15) Remove the front pillar by unscrewing the 7 screws. (See Figure 17.)
(16) Disconnect the TH7 sensor holder from the front pillar. (See Figure 17 Rear.)

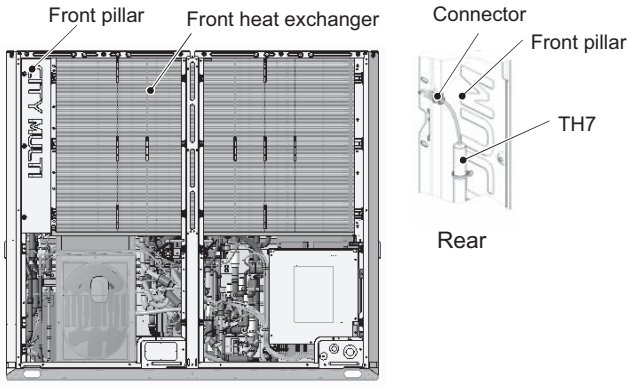

Figure 17

(17) To remove the front heat exchanger, first remove the front, left, right, and center frames by unscrewing the 16 screws. (See Figure 18.)
To remove the right and left rear heat exchangers, remove the top and the rear frames in addition to the front, left, right, and center frames by unscrewing the 21 screws. (See Figure 18.)
(18) Remove the center front pillar by unscrewing the 4 screws. (See Figure 19.)

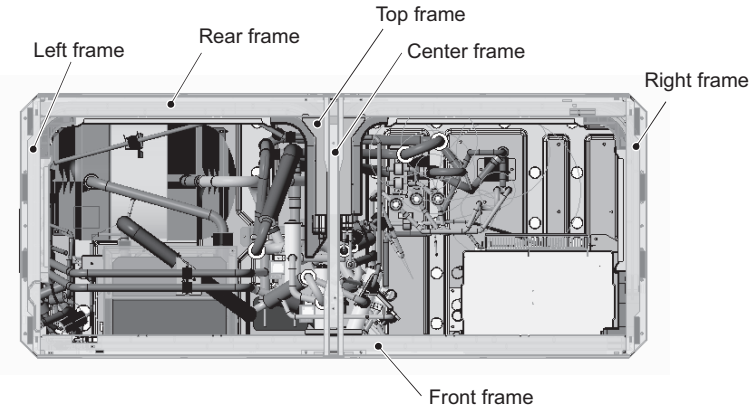

Figure 18

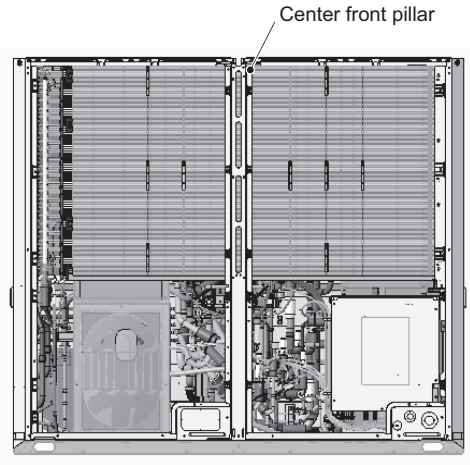

Figure 19

(19) To remove the front heat exchanger, unscrew the screws on the front of the right front pillar. (4 screws on a standard model or 3 screws on a high-efficiency model) (See Figure 20.)
To remove the left rear heat exchanger, unscrew the screws on the left side of the left front pillar and the screws on the front of the center pillar (7 screws on a standard model or 8 screws on a high-efficiency model.) (See Figures 21 and 22.)
To remove the right rear heat exchanger, unscrew the screws on the right side of the right front pillar and the screws on the front of the center pillar (7 screws on a standard model or 6 screws on a high-efficiency model.) (See Figures 22 and 23.)

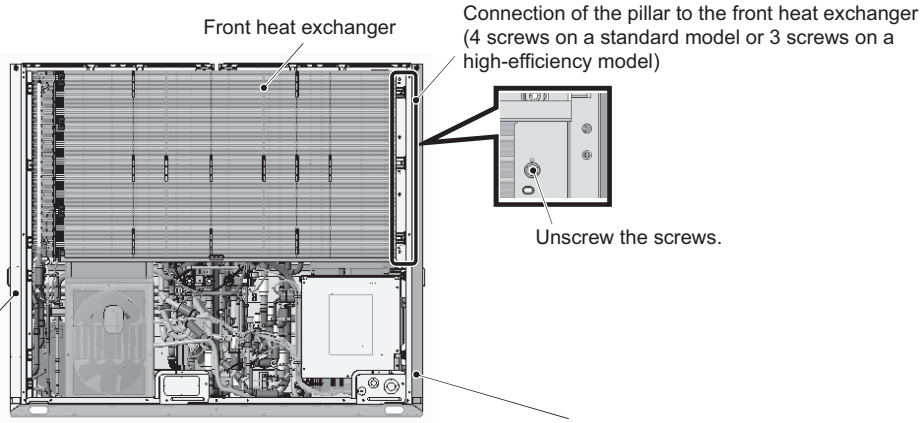

Removing the front heat exchanger (Figure 20)

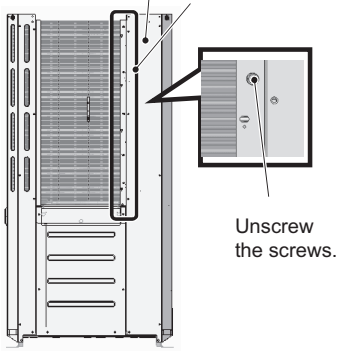

Removing the left rear heat exchanger (Figure 21)

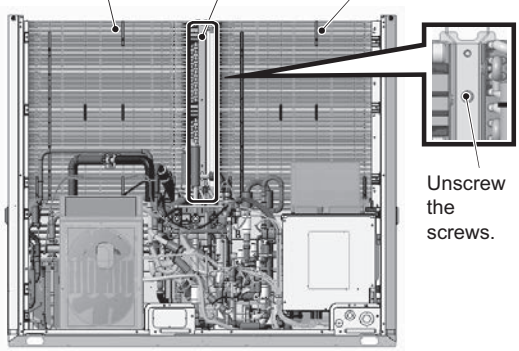

Removing the right and left rear heat exchangers (Figure 22)

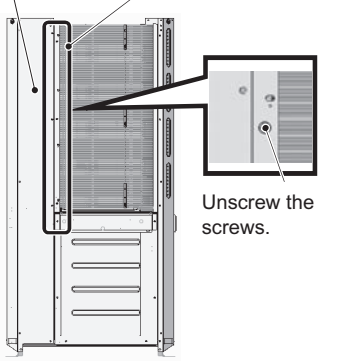

Removing the right rear heat exchanger (Figure 23)

(20) Remove the heat exchanger by diagonally lifting it up, using caution not to damage the fins or the pipes.

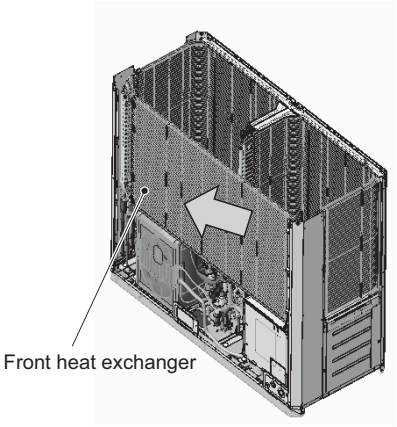

Removing the front heat exchanger (Figure 24)

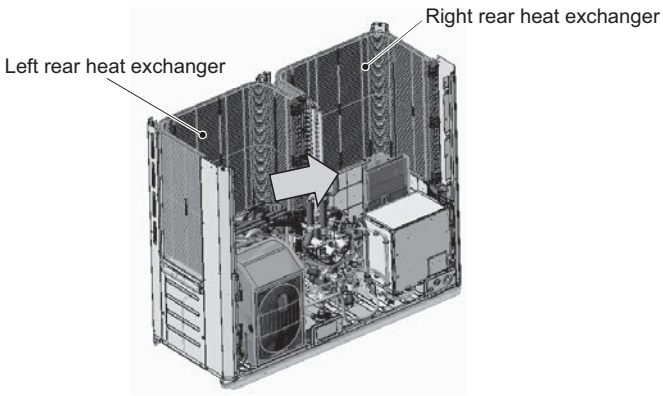

Removing the right-rear and left-rear heat exchangers (Figure 25)

(21) Re-place the front and the rear heat exchangers in the reverse order as they were removed.
Re-place the components that were removed as they were.
Re-place each unit wiring according to the wiring color and identification label (attached to the wiring protective tube) shown in the table below.

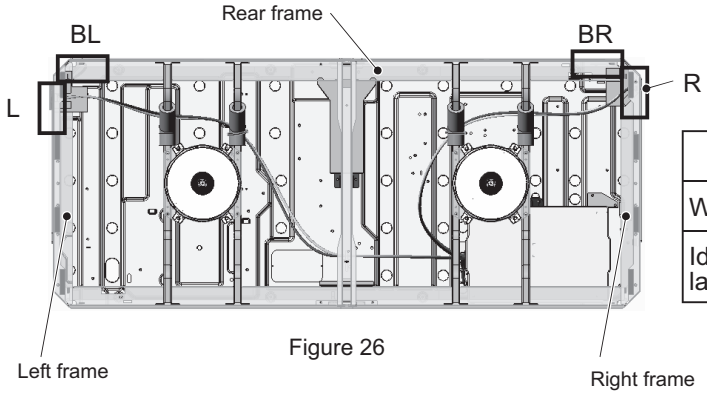

Figure 26

	L	R	BL	BR
Wiring color	Yellow	Blue	Red	White
Identification label	XL-L	XL-R	XL-BL	XL-BR

4. EXL-module

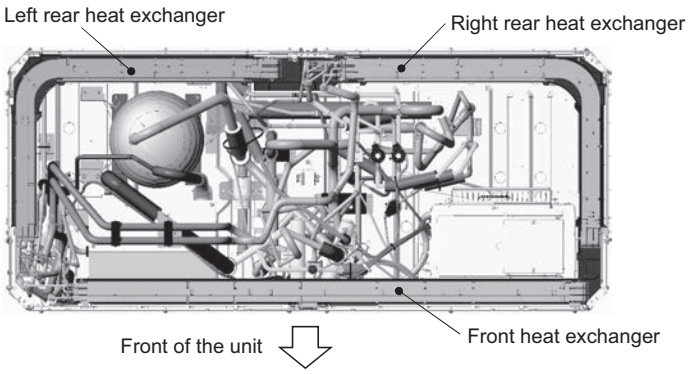

Figure 1

(1) Remove the two front panels from the unit by unscrewing the 14 screws. (See Figure 2.)
(2) Remove the fin guard by unscrewing the 12 screws. (See Figure 2.)
(3) Remove pipe cover. (See Figure 3.)
(4) Unscrew the two screws from the center front pillar. (See Figure 3.)
Remove the left drain pan by unscrewing the two screws and cutting the two cable ties. (See Figure 3.)
(5) Remove the right drain pan by unscrewing the 2 screws. (See Figure 3.)

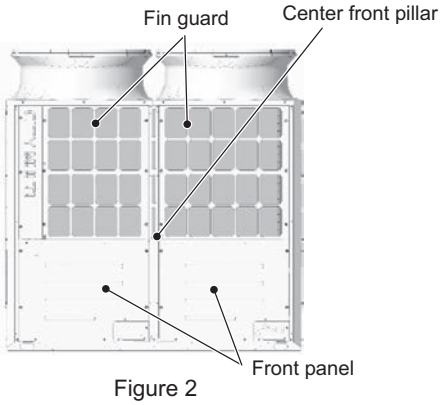

Figure 2

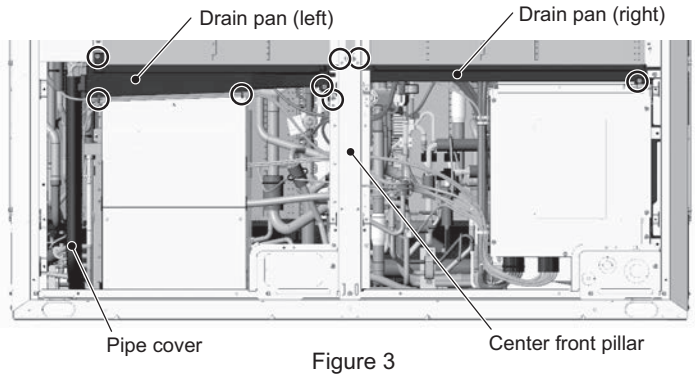

Figure 3

(6) Remove the 3 cable straps from the center pillar. (See Figure 4.)
(7) Remove the 3 cable straps holding motor wiring from the control box. (See Figure 5.)

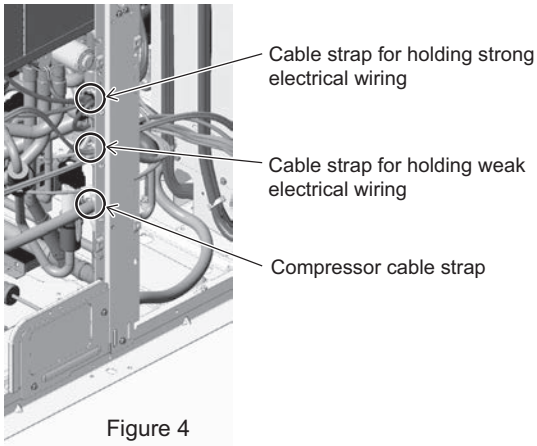

Figure 4

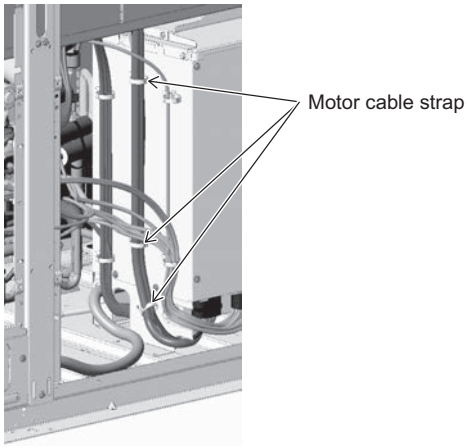

Figure 5

(8) Remove the right and left fin guards and the wiring cover from the cabinet by unscrewing the 18 screws. (See Figure 6 Right and Figure 6 Left.)
Unscrew the four screws from the rear fin guard on the cabinet. Pull the wiring cover toward the outside of the unit (direction shown by arrow ①), and remove the wiring from the wiring cover. (See Figure 6 Rear.)

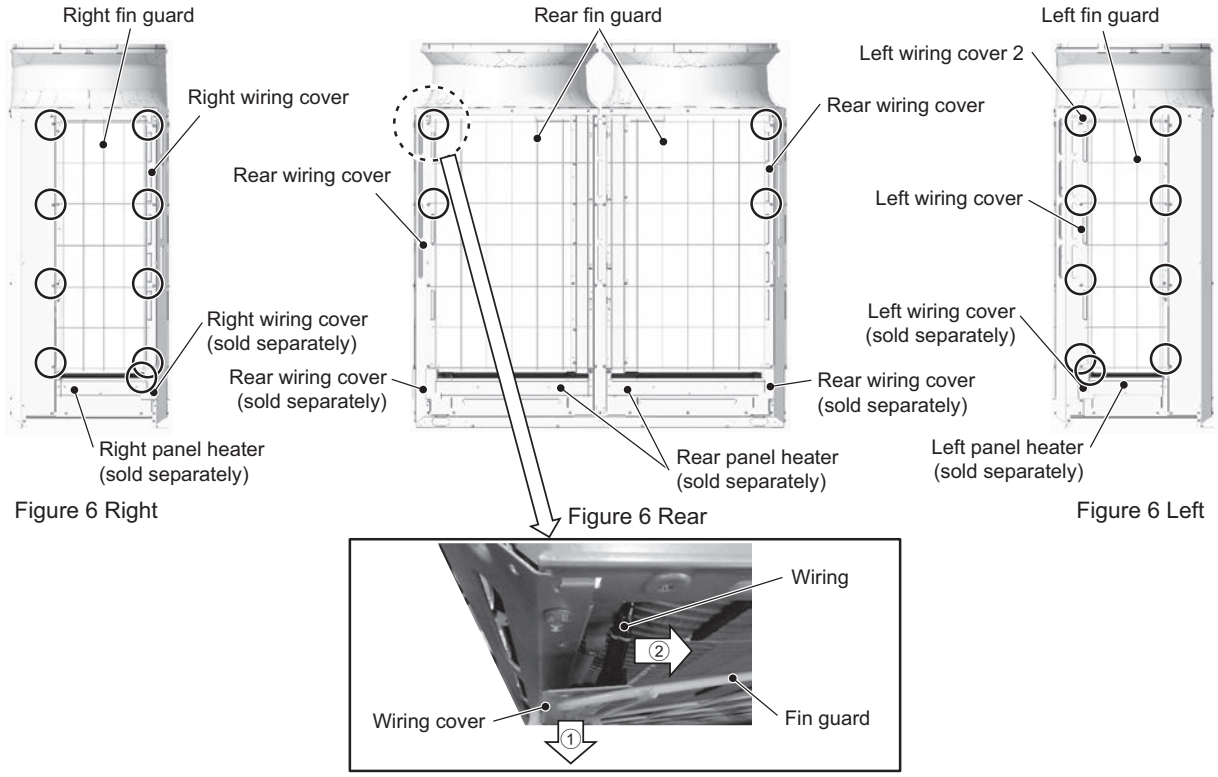

Figure 6 Right
Figure 6 Rear
Figure 6 Left

(9) If a separately sold panel heater is installed, disconnect the connectors of the panel heater wiring. Bundle the excessive disconnected panel heater wiring with adhesive tape or other materials. (4 locations as shown in Figure 7.)

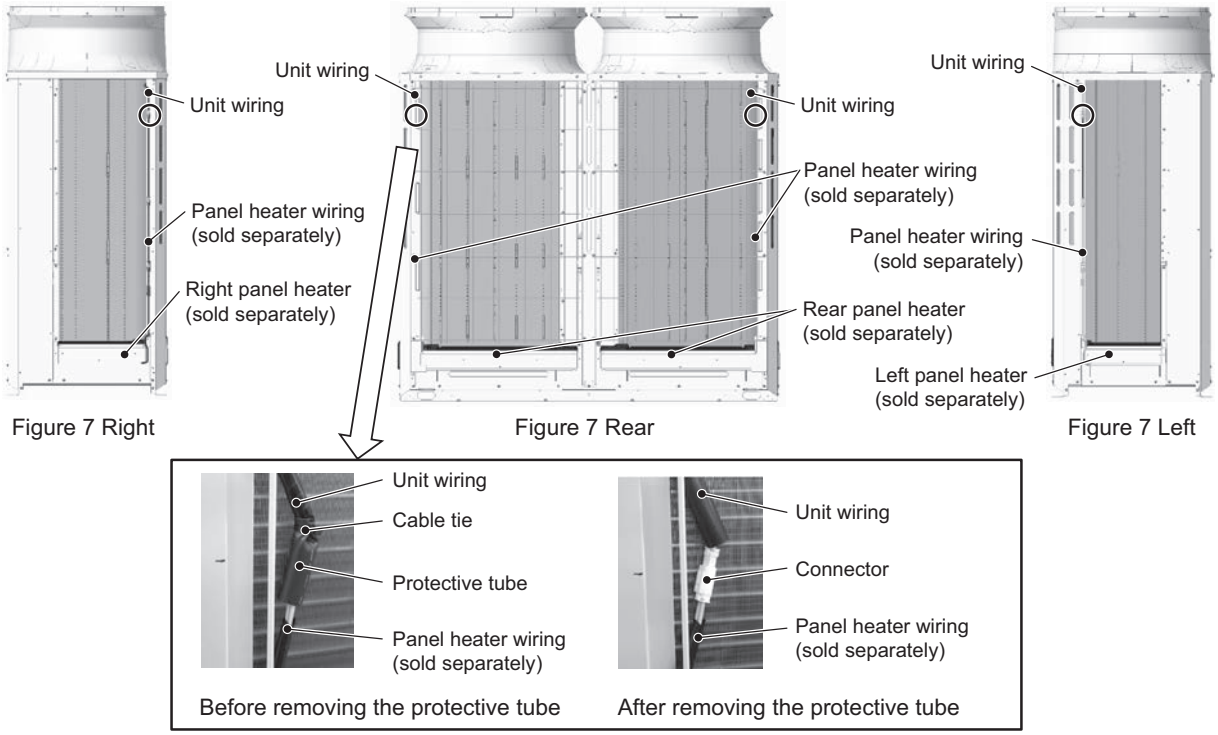

Figure 7 Right
Figure 7 Rear
Figure 7 Left

Before removing the protective tube
After removing the protective tube

(10) Remove the fan guard by unscrewing the 12 screws. (See Figure 8.)
(11) Unstrap the cable from the cable strap on the middle frame. (Figure 9)
(12) Remove the cable tie that is holding the motor ASSY and the unit wiring.
Remove the motor ASSY by unscrewing the 16 screws, using caution not to disconnect the motor wiring or not to damage the fan. (See Figure 9.)

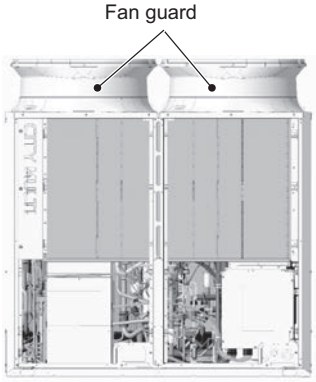

Figure 8

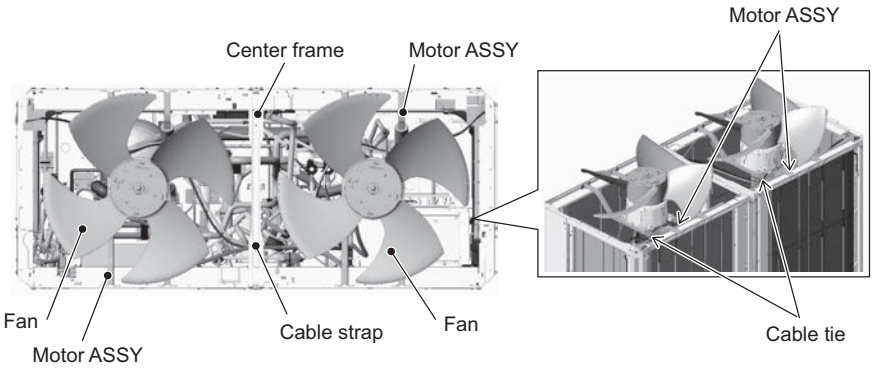

Figure 9

(13) Disconnect the unit wirings from the right and left frames. (Figure 10)
Keep all excessive wirings, including the ones disconnected from the frames, out of the way of removing the heat exchanger.

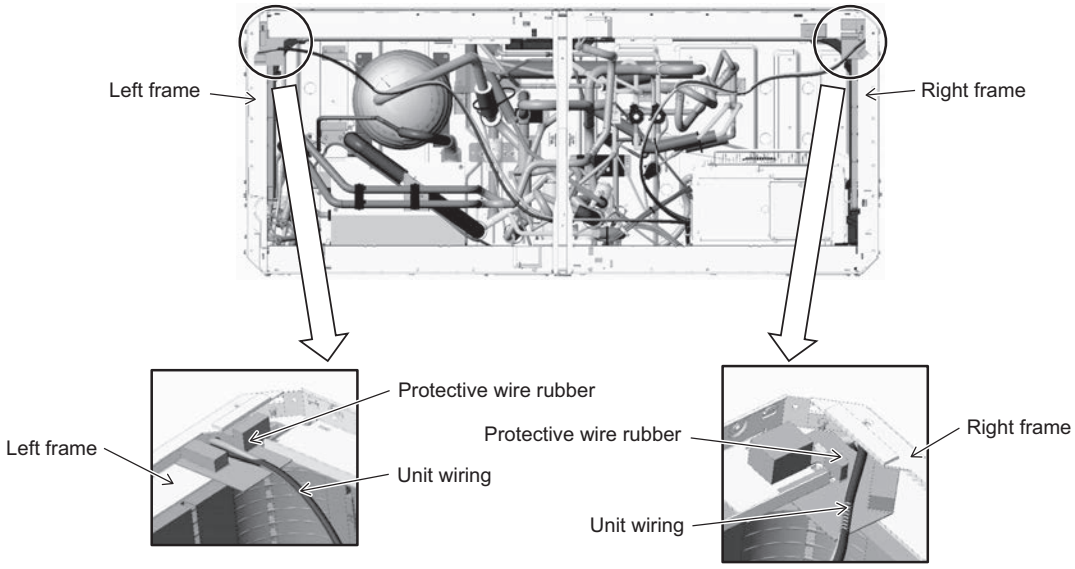

Figure 10

(14) Before removing the front heat exchanger, protect the surrounding electrical components and the pipe cover with a recommended felt soaked in water, and then remove the braze from four areas. (See Figure 11.)
To remove the right and left rear heat exchangers, remove the braze from four areas. (See Figures 12 and 13.)

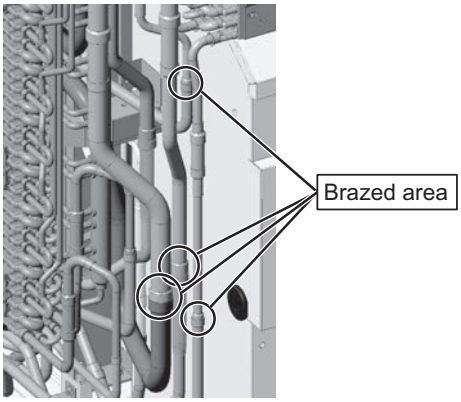

Removal of the front heat exchanger (Figure 11)

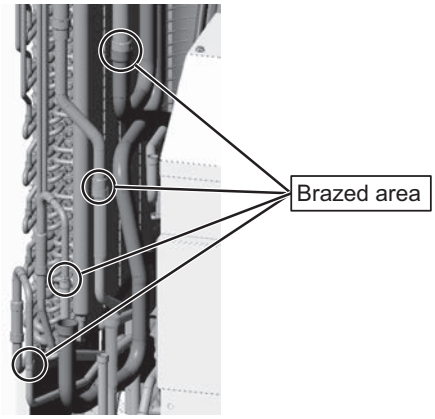

Removal of the left rear heat exchanger (Figure 12)

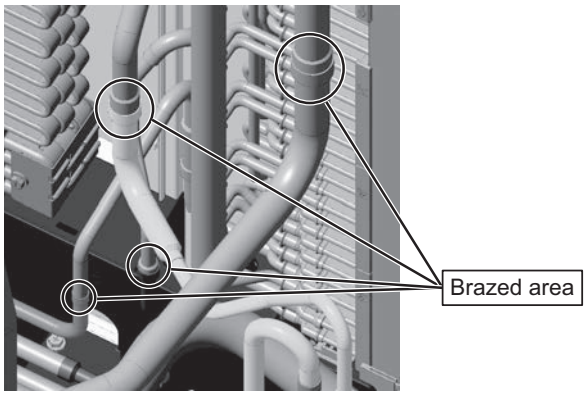

Removal of the right rear heat exchanger (Figure 13)

Notes for replacing refrigerant circuit components (heat exchanger)
- Be sure to perform non-oxidized brazing.
- After brazing is done, check that the brazing is done properly and check for leaks before vacuum-drying the pipes.
- Direct the brazing torch flame away from the wiring and sheet metals inside the unit not to damage them.
- Place the wet felt sheets listed below (or their equivalents) around the areas to be brazed to protect the heat exchanger, pipes, and pipe covers from being damaged from the brazing torch flame.
  Recommended felt sheets: Spatter felt 50CF-11 (5t x 1 m x 1 m) by TRUSCO Nakayama
  Felt sheets that meet the JIS standard (JIS A 1323 type A "Flame retardant testing method for spark droplets of welding and gas cutting on fabric sheets in construction works")

(15) Remove the front pillar by unscrewing the 7 screws. (See Figure 14.)
(16) Disconnect the TH7 sensor holder from the front pillar. (See Figure 14 Rear.)

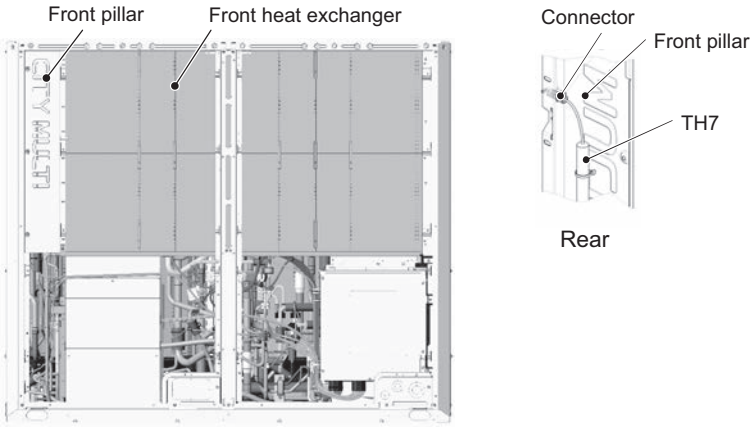

Figure 14

(17) To remove the front heat exchanger, remove the front, left, right, and center frames by unscrewing the 16 screws. (See Figure 15.)
To remove the right and left rear heat exchangers, remove the rear frames in addition to the front, left, right, and center frames by unscrewing the 18 screws. (See Figure 15.)
(18) Remove the center front pillar by unscrewing the 2 screws. (See Figure 16.)

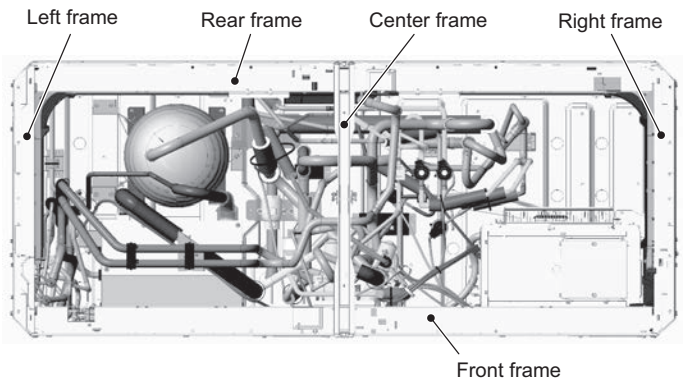

Figure 15

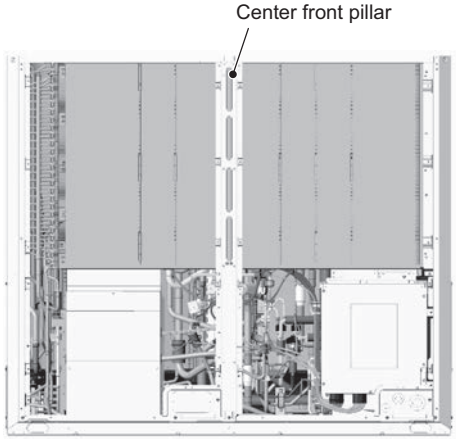

Figure 16

(19) To remove the front heat exchanger, unscrew the 3 screws from the front of the right front pillar. (See Figure 17.)
To remove the left rear heat exchanger, unscrew the 12 screws from the left side of the left front pillar and from the front of the center rear pillar. (See Figures 18 and 19.)
To remove the right rear heat exchanger, unscrew the 9 screws from the right side of the right front pillar and from the front of the center rear pillar. (See Figures 19 and 20.)

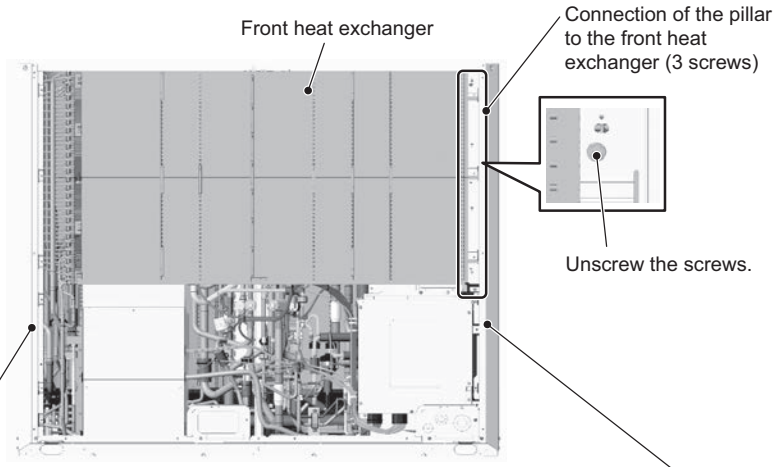

Removing the front heat exchanger (Figure 17)

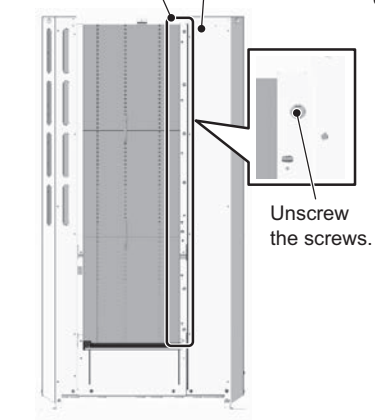

Removing the left rear heat exchanger (Figure 18)

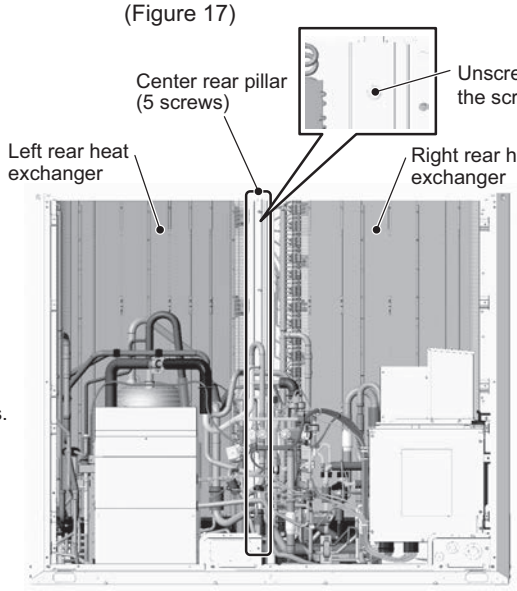

Removing the right and left rear heat exchangers (Figure 19)

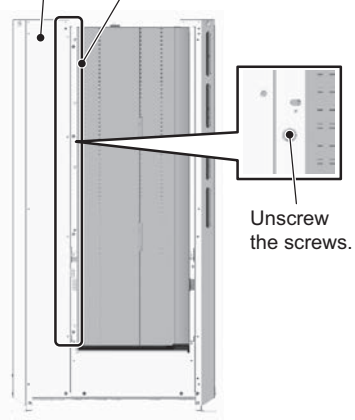

Removing the right rear heat exchanger (Figure 20)

(20) Remove the heat exchanger by diagonally lifting it up, using caution not to damage the fins or the pipes.

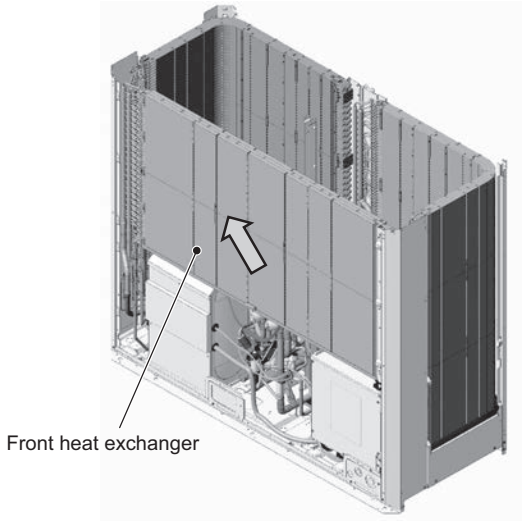

Removing the front heat exchanger (Figure 21)

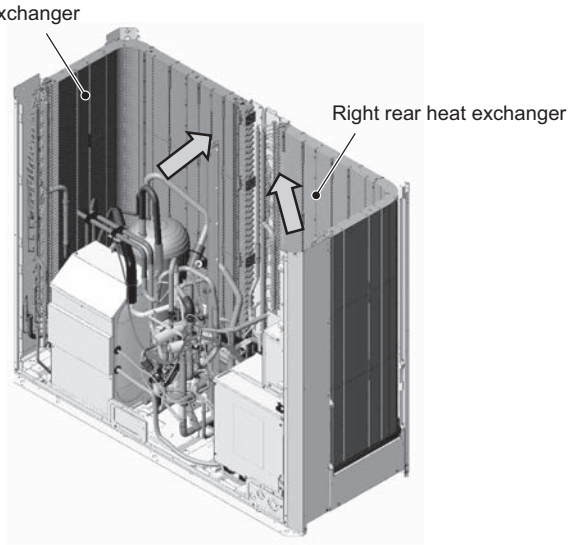

Removing the right-rear and left-rear heat exchangers (Figure 22)

(21) Re-place the front and the rear heat exchangers in the reverse order as they were removed.
Re-place the components that were removed as they were.
Re-place each unit wiring according to the wiring color and identification label (attached to the wiring protective tube) shown in the table below.

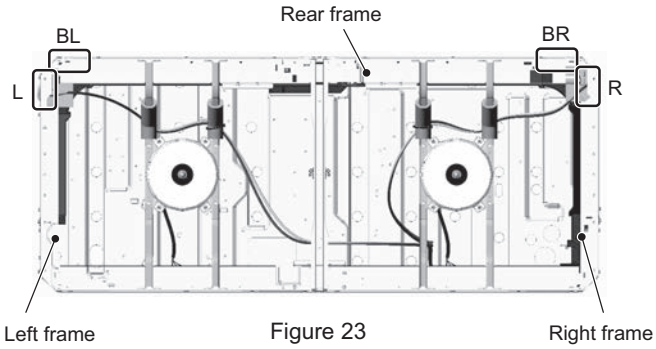

Figure 23

	L	R	BL	BR
Wiring color	Yellow	Blue	Red	White
Identification label	XL-L	XL-R	XL-BL	XL-BR

8-13-14 Accumulator Replacement Procedure <Type A>

1. S, L-module

(1) Remove the front heat exchanger. Refer to 8-13-13 Maintenance Procedures for the Heat Exchanger <Type A/Type A1> for details.
(2) Remove the top, front, and right compressor covers. Refer to 8-13-8 Compressor Replacement Procedure <Type A> for details.
(3) Remove the duct from the control box. Refer to 8-13-10 Removal Instructions for the Control Box <Type A/Type A1> for details.
(4) Remove the right and inside (right) compressor panels by unscrewing the four screws. (Applicable only to the S-module. See Figures 1 and 2.)

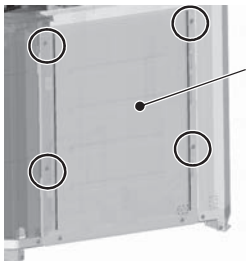

Figure 1

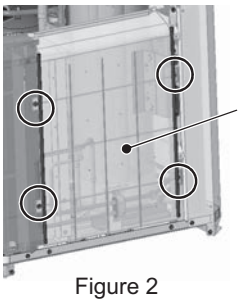

Figure 2

(5) Unscrew the two screws from the right accumulator fixing plate. (See Figures 3 and 5.)
(6) Unscrew the two screws from the rear accumulator fixing plate. (See Figures 3 and 4.)
(7) Remove the four screws from the accumulator fixing base legs. (See Figure 6.)

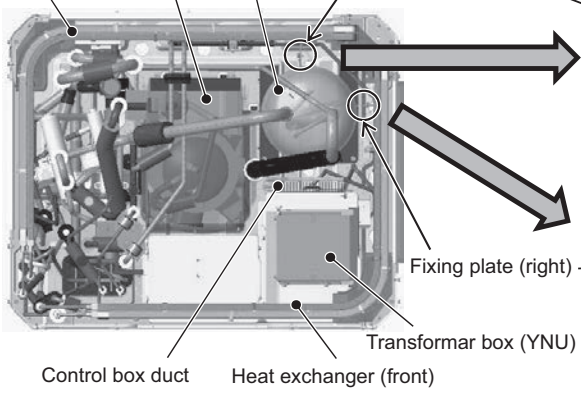

Figure 3

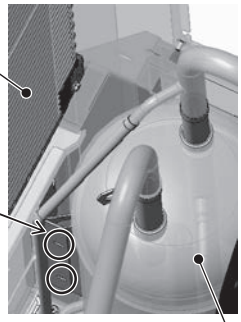

Figure 4

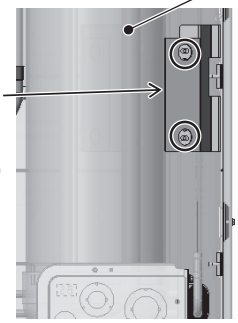

Figure 5

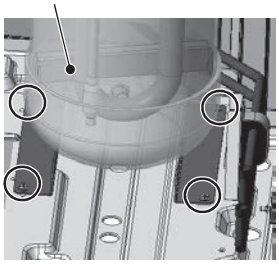

Figure 6

(8) Remove the braze at the four areas on the accumulator inlet and outlet pipes shown in Figure 7.

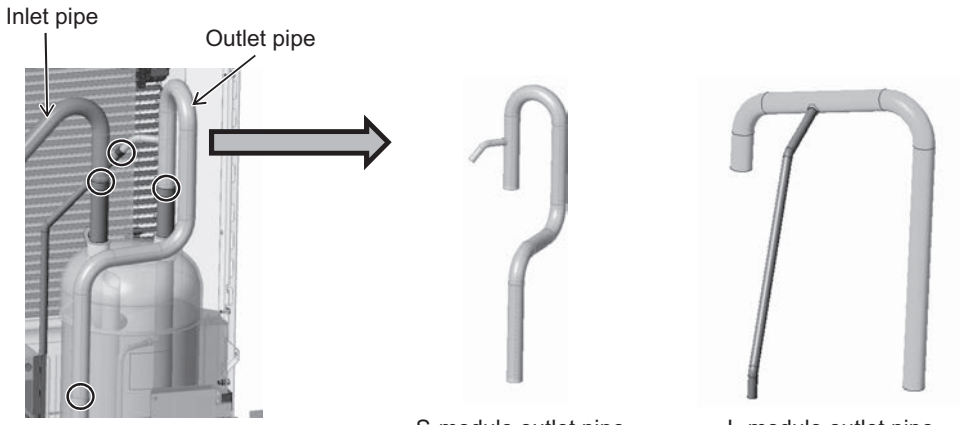

Figure 7

(9) Re-place the accumulator in the reverse order as it was removed.
Re-place the components that were removed as they were.

*Notes on replacing refrigerant circuit components (accumulator)
- Be sure to perform non-oxidized brazing.
- Before heating the pipes, wrap the refrigerant circuit components with a wet towel to keep the temperature of the components from rising above 120°C.
- After brazing is done, check that the brazing is done properly and check for leaks before vacuum-drying the pipes.
- Direct the brazing torch flame away from the wiring and sheet metals inside the unit not to damage them.
- Wet felt sheets listed below (or its equivalent), and place them around the areas to be brazed to protect the heat exchanger, pipes, and pipe covers from being damaged from the brazing torch flame.
  Recommended felt sheets: Spatter felt 50CF-11 (5t x 1 m x 1 m) by TRUSCO Nakayama
  Felt sheets that meet the JIS standard (JIS A 1323 type A "Flame retardant testing method for spark droplets of welding and gas cutting on fabric sheets in construction works")

2. XL-module

(1) Remove the front heat exchanger. Refer to 8-13-13 Maintenance Procedures for the Heat Exchanger <Type A/Type A1> for details.
(2) Remove the top, front, and right compressor covers. Refer to 8-13-8 Compressor Replacement Procedure <Type A> for details.
(3) Remove the fixing plate 1 above four-way valve (21S4c), saddle, and rubber spacer by unscrewing the three screws shown in Figure 8.
Either remove or protect the wiring, pipe cover, and plastic components to keep them from being damaged by the torch flame.

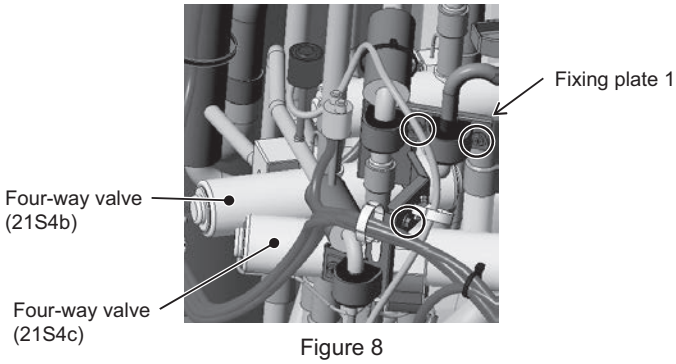

Figure 8

(4) Remove the sheet metal, cable ties, and rubber spacers from the accumulator mounting plate by unscrewing the screw. (See Figure 9.)

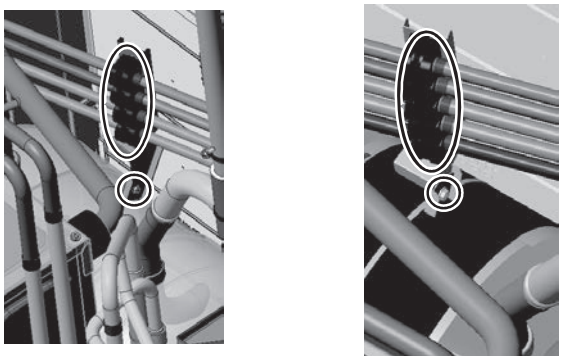
Figure 9

(5) Remove the braze at the three areas on the accumulator outlet pipe. (See Figure 10.)
(6) Remove the braze at the two areas on the accumulator inlet pipe. (See Figure 11.)

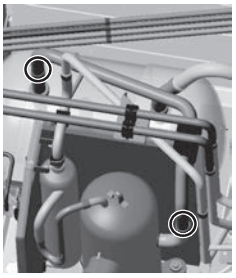
Figure 10

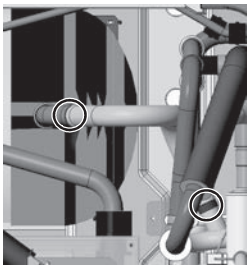
Figure 11

(7) For the four-pipe piping on the back of the accumulator, follow the procedures below.
Remove the braze at the four areas on the four pipes on the back of the accumulator. (See Figure 12.)
Remove the braze at the six areas that are located on the right side of the four pipes on the back of the accumulator. (See Figure 13.)

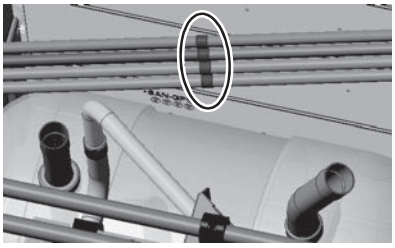

Figure 12

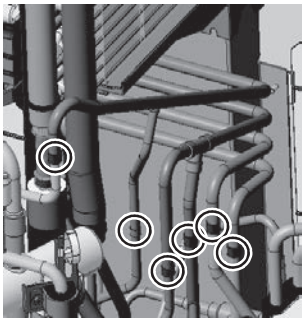

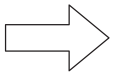

Figure 13

(8) For the five-pipe piping on the back of the accumulator, follow the procedures below.
Remove the braze at the five areas on the five pipes on the back of the accumulator. (See Figure 14.)
Remove the braze at the seven areas that are located on the right side of the five pipes on the back of the accumulator. (See Figure 15.)

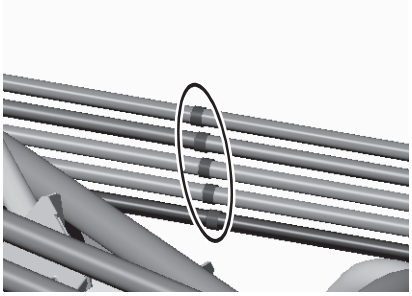

Figure 14

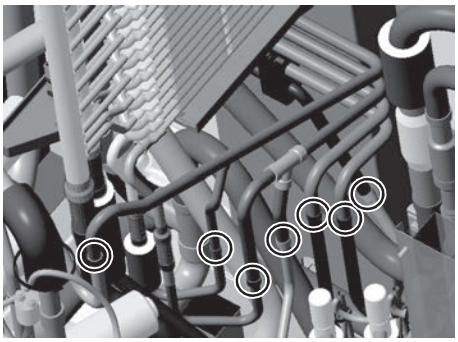

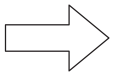

Figure 15

(9) Re-place the accumulator in the reverse order as it was removed.
Re-place the components that were removed as they were.

3. EXL-module

(1) Remove the front heat exchanger. Refer to 8-13-13 Maintenance Procedures for the Heat Exchanger <Type A/Type A1> for details.
(2) Remove the top and front compressor covers by unscrewing the six screws. (See Figure 2.)
(3) Cut the two cable ties holding TH4 and TH15, and remove the wiring from the rubber bush on the right compressor cover. (See Figure 3.)
(4) Remove the right compressor cover by unscrewing the screw. (See Figure 3.)

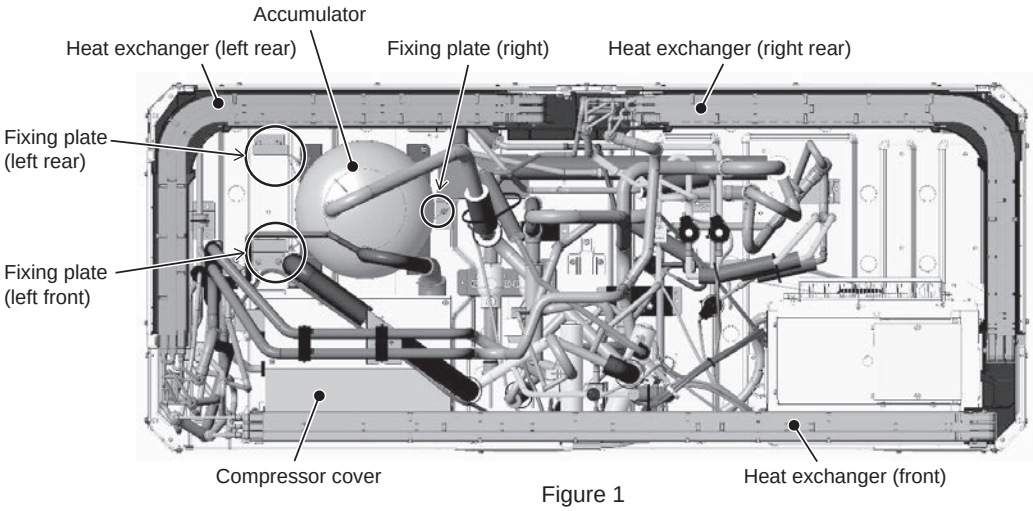

Figure 1

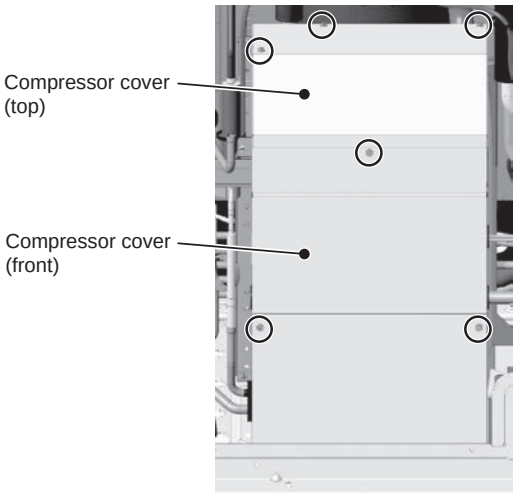

Figure 2

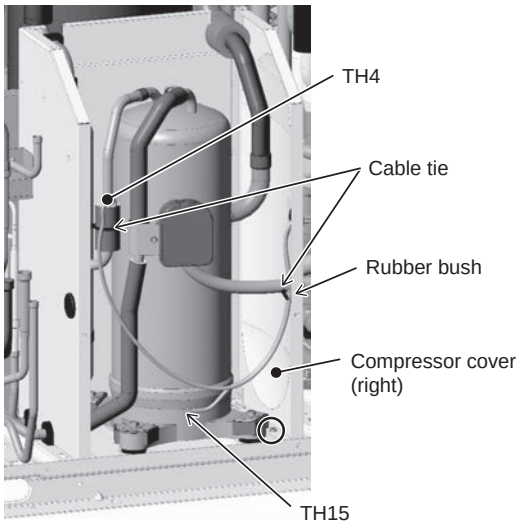

Figure 3

(5) Unscrew the four screws from the left front and left rear accumulator fixing plates. (See Figures 4 and 5.)
(6) Unscrew the four screws from the base legs of the left front and left rear accumulator fixing plates. (See Figures 4 and 6.)
(7) Unscrew the two screws from the right accumulator fixing plate. (See Figures 4 and 7.)
(8) Unscrew the four screws from the base legs of the accumulator. (See Figure 8.)

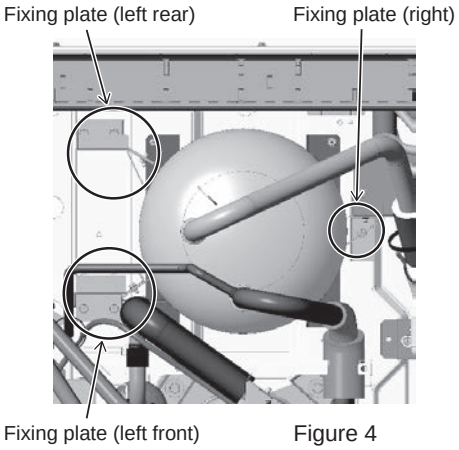

Figure 4

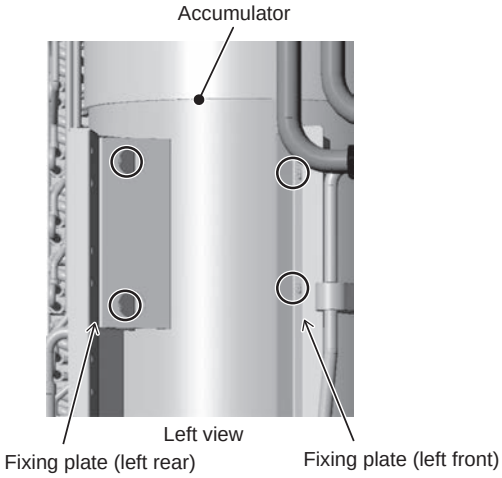

Figure 5

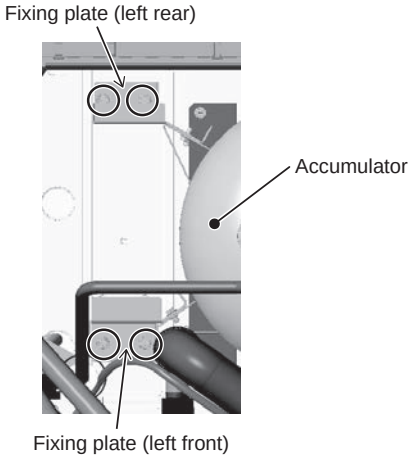

Figure 6

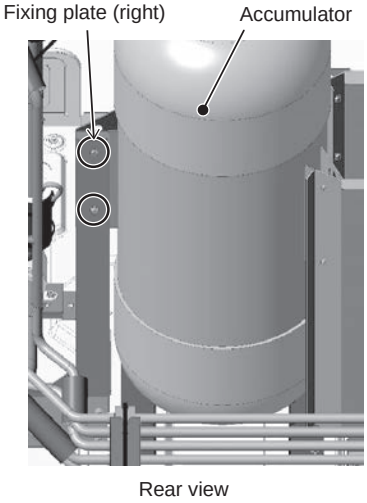

Figure 7

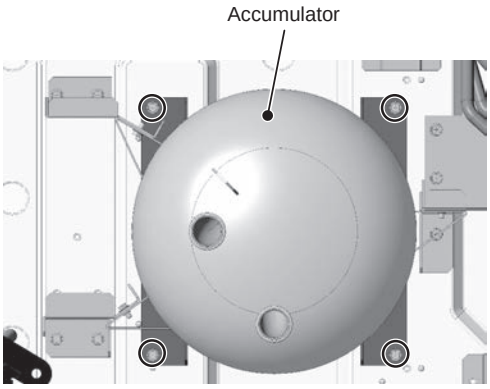

Figure 8

(9) Remove the three pipe covers. (See Figure 9.)
*Save the pipe cover for later use.

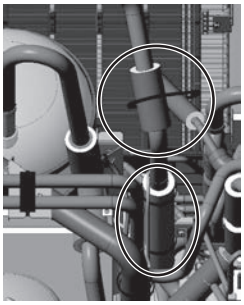

Figure 9

(10) Remove the braze from the five areas on the accumulator inlet and outlet pipes. (See Figure 10.)

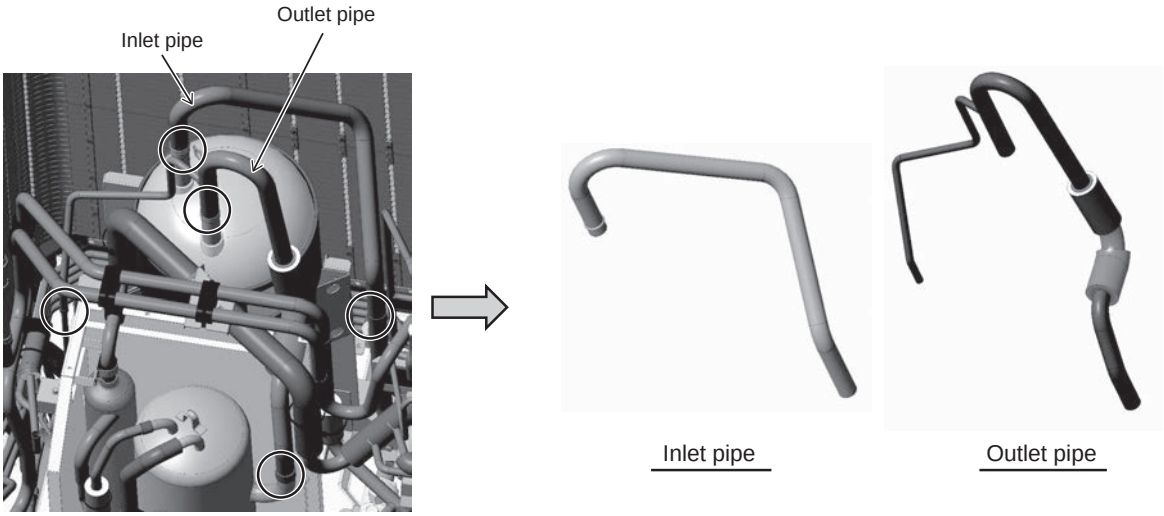

Figure 10

(11) Re-place the accumulator in the reverse order as it was removed.
Re-place the components that were removed as they were.

*Notes on replacing refrigerant circuit components (accumulator)
- Be sure to perform non-oxidized brazing.
- Before heating the pipes, wrap the refrigerant circuit components with a wet towel to keep the temperature of the components from rising above 120°C.
- After brazing is done, check that the brazing is done properly and check for leaks before vacuum-drying the pipes.
- Direct the brazing torch flame away from the wiring and sheet metals inside the unit not to damage them.
- Wet felt sheets listed below (or its equivalent), and place them around the areas to be brazed to protect the heat exchanger, pipes, and pipe covers from being damaged from the brazing torch flame.
  Recommended felt sheets: Spatter felt 50CF-11 (5t x 1 m x 1 m) by TRUSCO Nakayama
  Felt sheets that meet the JIS standard (JIS A 1323 type A "Flame retardant testing method for spark droplets of welding and gas cutting on fabric sheets in construction works")

8-13-15 Accumulator Replacement Procedure <Type A1>

1. S, L-module

(1) Remove the front heat exchanger. Refer to 8-13-13 Maintenance Procedures for the Heat Exchanger <Type A/Type A1> for details.
(2) Remove the top, front, and right compressor covers. Refer to 8-13-9 Compressor Replacement Procedure <Type A1> for details.
(3) Remove the duct from the control box. Refer to 8-13-10 Removal Instructions for the Control Box <Type A/Type A1> for details.
(4) Remove the right and inside (right) compressor panels by unscrewing the four screws. (Applicable only to the S-module. See Figures 1 and 2.)

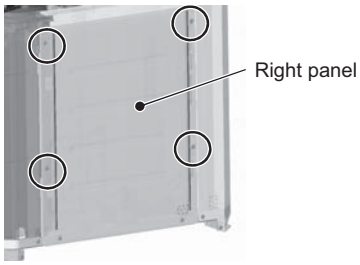

Figure 1

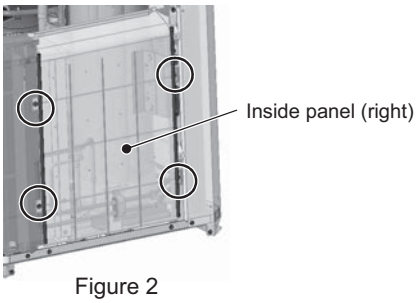

Figure 2

(5) Unscrew the two screws from the right accumulator fixing plate. (See Figures 3 and 5.)
(6) Unscrew the two screws from the rear accumulator fixing plate. (See Figures 3 and 4.)
(7) Remove the four screws from the accumulator fixing base legs. (See Figure 6.)

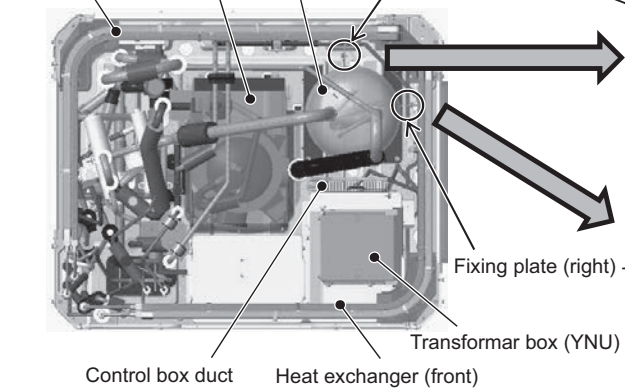

Figure 3

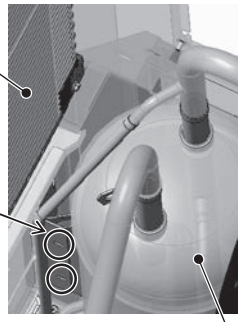

Figure 4

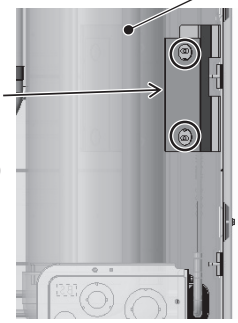

Figure 5

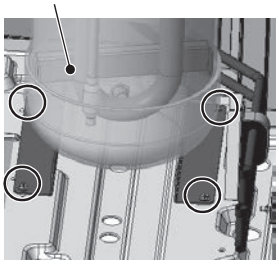

Figure 6

(8) Remove the braze at the four areas on the accumulator inlet and outlet pipes shown in Figure 7.

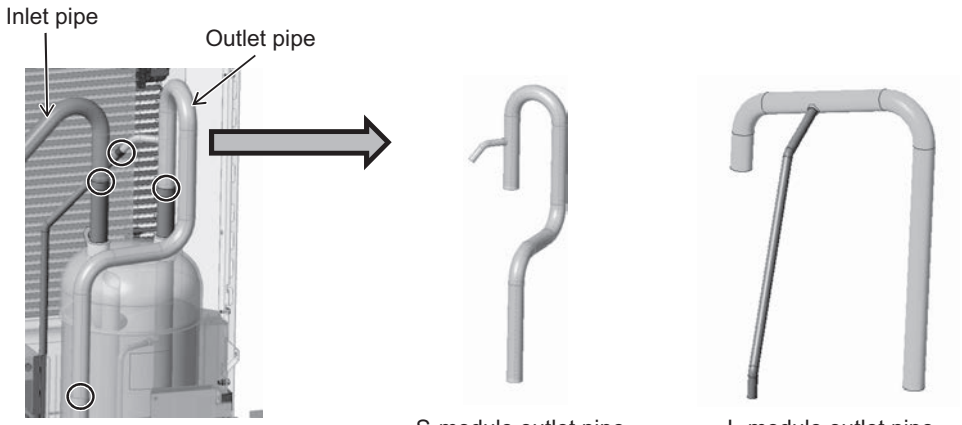

Figure 7

(9) Re-place the accumulator in the reverse order as it was removed.
Re-place the components that were removed as they were.

*Notes on replacing refrigerant circuit components (accumulator)
- Be sure to perform non-oxidized brazing.
- Before heating the pipes, wrap the refrigerant circuit components with a wet towel to keep the temperature of the components from rising above 120°C.
- After brazing is done, check that the brazing is done properly and check for leaks before vacuum-drying the pipes.
- Direct the brazing torch flame away from the wiring and sheet metals inside the unit not to damage them.
- Wet felt sheets listed below (or its equivalent), and place them around the areas to be brazed to protect the heat exchanger, pipes, and pipe covers from being damaged from the brazing torch flame.
  Recommended felt sheets: Spatter felt 50CF-11 (5t x 1 m x 1 m) by TRUSCO Nakayama
  Felt sheets that meet the JIS standard (JIS A 1323 type A "Flame retardant testing method for spark droplets of welding and gas cutting on fabric sheets in construction works")

2. XL-module

(1) Remove the front heat exchanger. Refer to 8-13-13 Maintenance Procedures for the Heat Exchanger <Type A/Type A1> for details.
(2) Remove the top, front, and right compressor covers. Refer to 8-13-9 Compressor Replacement Procedure <Type A1> for details.
(3) Remove the fixing plate 1 above four-way valve (21S4c), saddle, and rubber spacer by unscrewing the three screws shown in Figure 8.
Either remove or protect the wiring, pipe cover, and plastic components to keep them from being damaged by the torch flame.

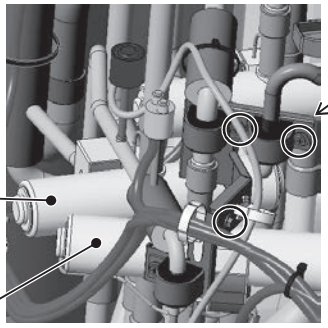

Figure 8

(4) Remove the sheet metal, cable ties, and rubber spacers from the accumulator mounting plate by unscrewing the screw. (See Figure 9.)

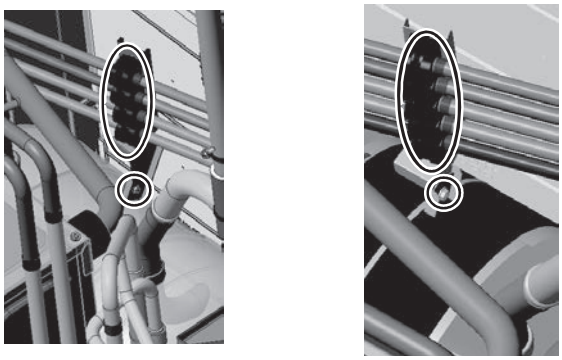

Figure 9

(5) Remove the braze at the three areas on the accumulator outlet pipe. (See Figure 10.)
(6) Remove the braze at the two areas on the accumulator inlet pipe. (See Figure 11.)

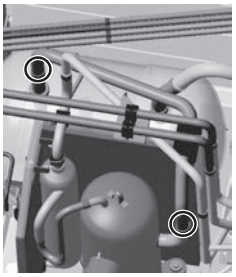

Figure 10

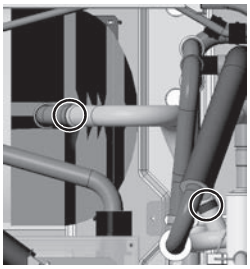

Figure 11

(7) For the four-pipe piping on the back of the accumulator, follow the procedures below.
Remove the braze at the four areas on the four pipes on the back of the accumulator. (See Figure 12.)
Remove the braze at the six areas that are located on the right side of the four pipes on the back of the accumulator. (See Figure 13.)

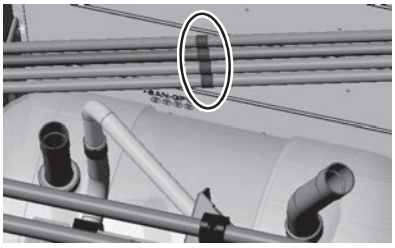

Figure 12

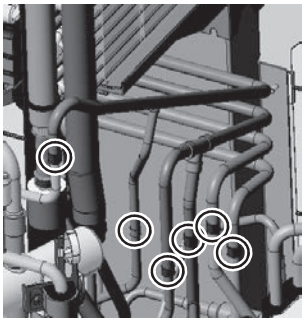

Figure 13

(8) For the five-pipe piping on the back of the accumulator, follow the procedures below.
Remove the braze at the five areas on the five pipes on the back of the accumulator. (See Figure 14.)
Remove the braze at the seven areas that are located on the right side of the five pipes on the back of the accumulator. (See Figure 15.)

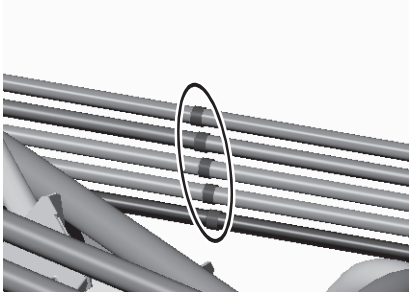

Figure 14

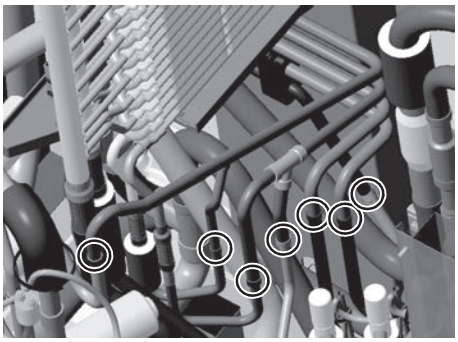

Figure 15

(9) Re-place the accumulator in the reverse order as it was removed.
Re-place the components that were removed as they were.

3. EXL-module

(1) Remove the front heat exchanger. Refer to 8-13-13 Maintenance Procedures for the Heat Exchanger <Type A/TypaA1> for details.
(2) Remove the top and front compressor covers by unscrewing the six screws. (See Figure 2.)
(3) Cut the cable ties holding TH4 and TH15, and remove the TH4, TH15, and crankcase heater (CH11) wires from the rubber bush on the right compressor cover.
(4) Remove the right compressor cover by unscrewing the screw. (See Figure 3.)

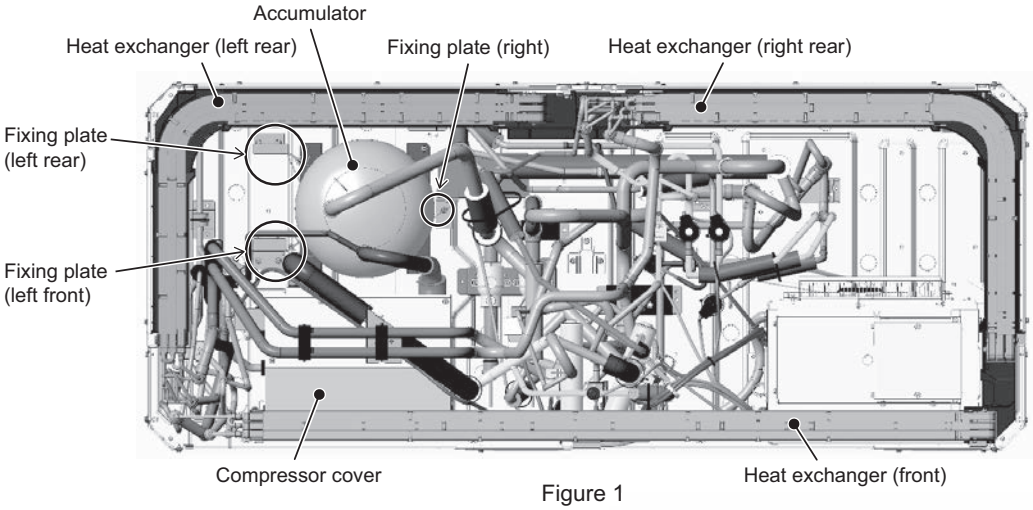

Figure 1

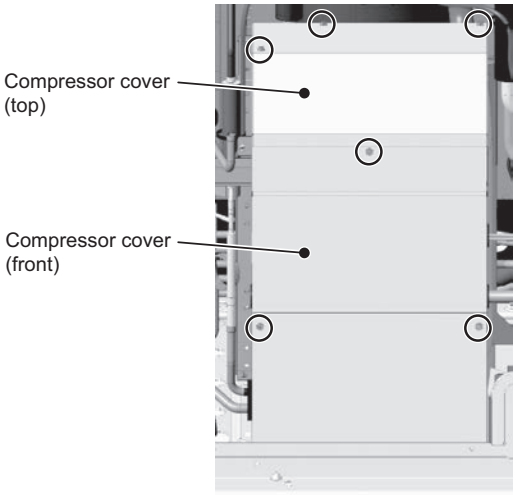

Figure 2

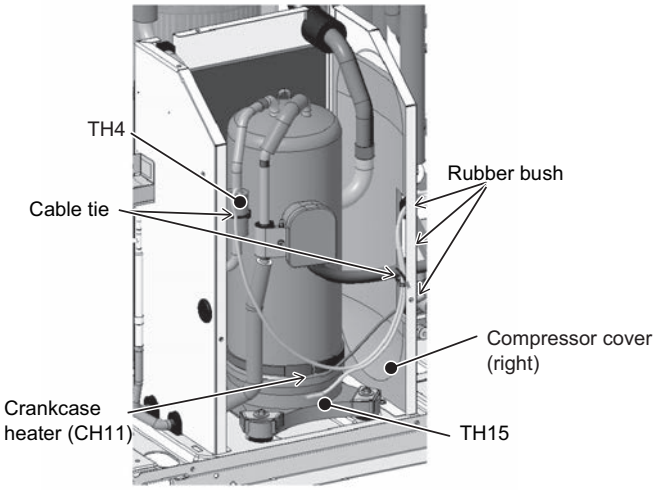

Figure 3

(5) Unscrew the four screws from the left front and left rear accumulator fixing plates. (See Figures 4 and 5.)
(6) Unscrew the four screws from the base legs of the left front and left rear accumulator fixing plates. (See Figures 4 and 6.)
(7) Unscrew the two screws from the right accumulator fixing plate. (See Figures 4 and 7.)
(8) Unscrew the four screws from the base legs of the accumulator. (See Figure 8.)

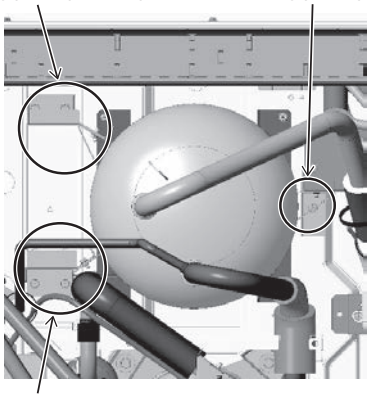

Figure 4

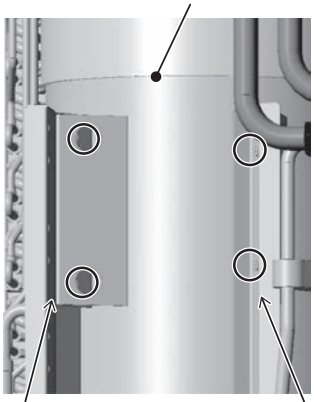

Figure 5

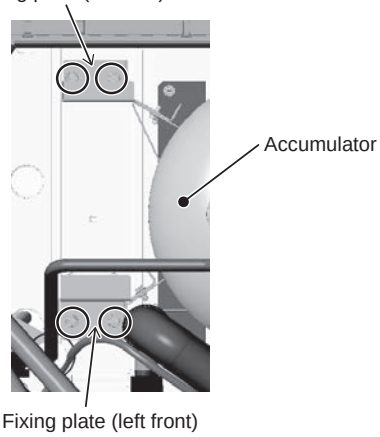

Figure 6

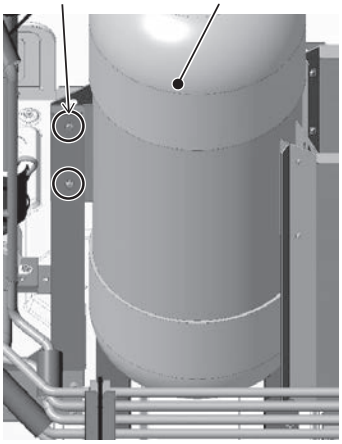

Figure 7

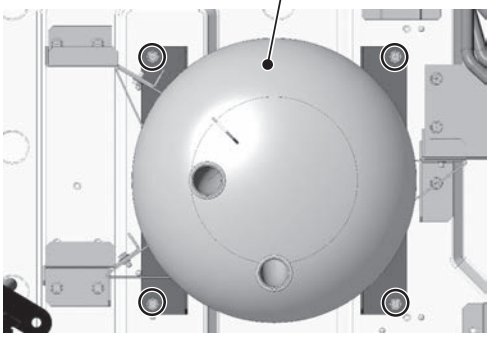

Figure 8

(9) Remove the three pipe covers. (See Figure 9.)
*Save the pipe cover for later use.

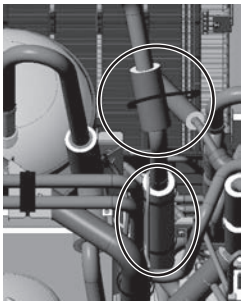

Figure 9

(10) Remove the braze from the five areas on the accumulator inlet and outlet pipes. (See Figure 10.)

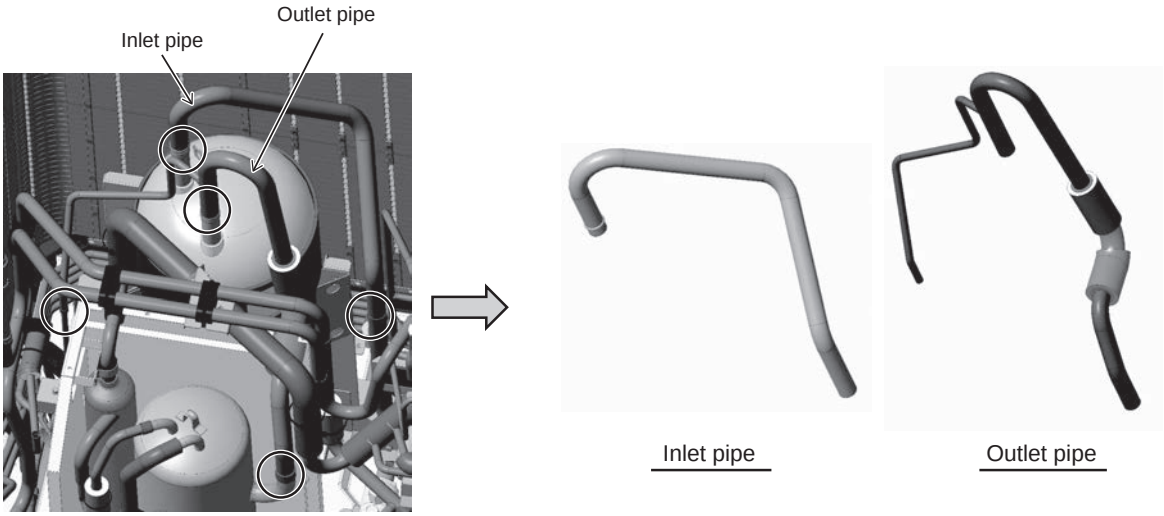

Figure 10

(11) Re-place the accumulator in the reverse order as it was removed.
Re-place the components that were removed as they were.

*Notes on replacing refrigerant circuit components (accumulator)
- Be sure to perform non-oxidized brazing.
- Before heating the pipes, wrap the refrigerant circuit components with a wet towel to keep the temperature of the components from rising above 120°C.
- After brazing is done, check that the brazing is done properly and check for leaks before vacuum-drying the pipes.
- Direct the brazing torch flame away from the wiring and sheet metals inside the unit not to damage them.
- Wet felt sheets listed below (or its equivalent), and place them around the areas to be brazed to protect the heat exchanger, pipes, and pipe covers from being damaged from the brazing torch flame.
  Recommended felt sheets: Spatter felt 50CF-11 (5t x 1 m x 1 m) by TRUSCO Nakayama
  Felt sheets that meet the JIS standard (JIS A 1323 type A "Flame retardant testing method for spark droplets of welding and gas cutting on fabric sheets in construction works")

8-14 BC Controller Maintenance Instructions

1. Service panel

*Special care must be taken when replacing heavy parts.

Work procedure	Explanatory figure
<KB type, J type, and 4-, 6-, 8-branch types> 1) Remove the control box by unscrewing the four fixing screws. (Figure 1) 2) Unscrew the four service panel fixing screws. (Figure 2) 3) Remove the top panel by unscrewing the nine fixing screws. (Figure 2) <For J-type, 12- and 16-branch types, JA-type, and KA-type> 1) Remove the service panel (1) by unscrewing the two fixing screws. (Figure 3) 2) Remove the control box by unscrewing the four fixing screws. (Figure 3) 3) Remove the top panel by unscrewing the 10 fixing screws. (Figure 4) 4) Remove the service panel (2) by unscrewing the two fixing screws. (Figure 4)	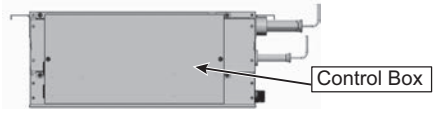 Ceiling panel (Figure 1) 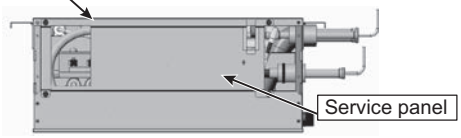 (Figure 2) 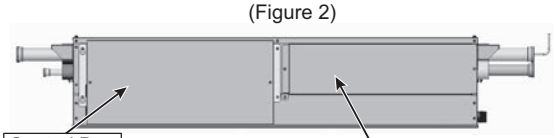 Control Box (Figure 3) Service panel (1) Ceiling panel 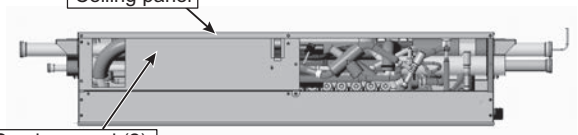 Service panel (2) (Figure 4)

2. Control box

Work procedure	Explanatory figure
(1) To check the inside of the control box, remove the two lock nuts on the control box cover. 1) Check the terminal connection of the power wire or of the transmission line. 2) Check the transformer. 3) Check the address switch. **(2) When the control board is replaced, the followings must be noted.** (1) Check that the board type is J1/2, JA1/2, or KA1/2. (2) Check that the wire and the connector are properly connected. **Note** It is not required to remove the two fixing screws on the control box when checking the inside.	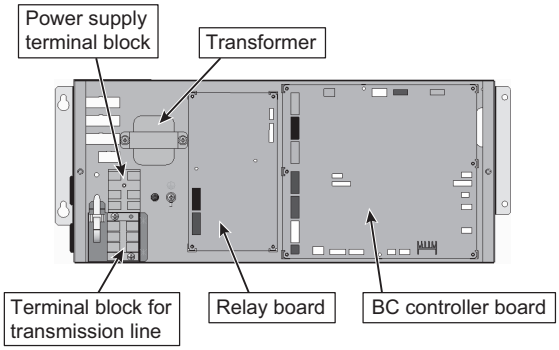 CMB-P1016NU-J1/2, JA1/2, KA1/2

3. Removing the drain pan

Work procedure	Explanatory figure
1) Remove the fixing screw on the long side of the bottom panel. (Four places encircled by circles in Figure 1) 2) To prevent the bottom panel from falling, of the four screws indicated with triangles in Figure 1, only loosen (but not remove) the two screws that are diagonally located or on the opposite ends of the long side of the panel (either (1) and (3), (2) and (4), (1) and (4), or (2) and (3)). Remove the two remaining screws. 3) As shown in the enlarged view of Figure 1, the fastening screw hole on the short side looks like two circles in different shape joined together (double-snowman shape). Slide the bottom panel in the direction of the arrow, and remove it in the downward direction. (Figure 2) 4) When removing the drain pan, hold the protruded area of the panel or the socket and pull it straight down, using caution not to let it come into contact with the sheet metal. (Figure 3) If the drain pan comes into contact with the sheet metal, the drain pan may be scraped, leading to water leakage. Installing the bottom panel 1) Of the four screws indicated with triangles in Figure 1, partially tighten the two screws that are diagonally located (either (1) and (3), or (2) and (4)). 2) Thread the screw into the double-snowman shaped hole, move the panel in the opposite direction as when it was removed in step 3) above, set the screw into the smaller circle, and tighten the screw to hold the panel in place. 3) Tighten the remaining screws. **Note** Do not stay directly underneath the unit when working with the bottom plate. Remove the drain piping to remove the drain pan. Check that no water has accumulated in the drain pan.	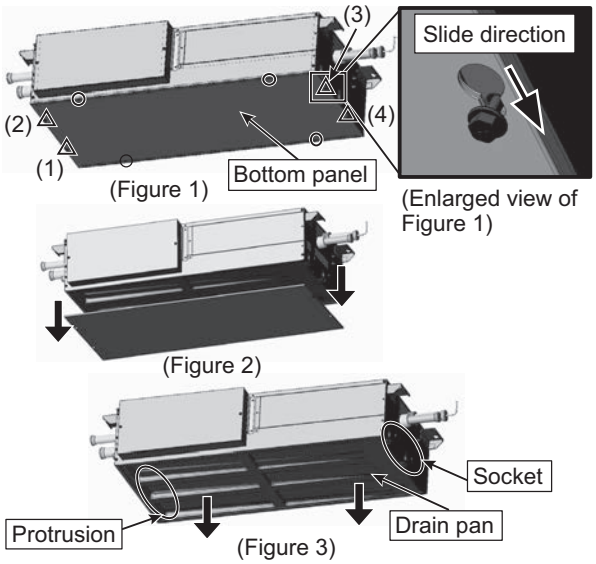

4. Thermistor (liquid pipe/gas pipe temperature detection)

*Special care must be taken when replacing heavy parts.

Work procedure	Explanatory figure
(1) Remove the service panel. 1) See the right figure and the section [3-5 External Appearance and Refrigerant Circuit Components of BC Controller] for information on TH11, TH12, TH15, and TH16. **(2) Remove the lead wire of the piping sensor from the control board.** 1) TH11,TH12 (CN10) 2) TH15,TH16 (CN11) **(3) Pull out the temperature sensor from the temperature sensor housing, and replace the temperature sensor with the new one.** **(4) Connect the lead wire of the temperature sensor securely on the control board.**	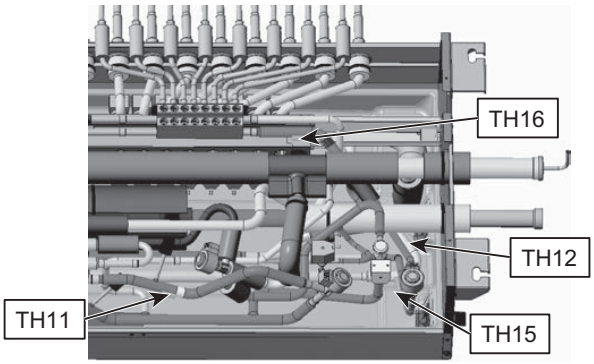 CMB-P1016NU-KA1/2

5. Pressure sensor

Work procedure	Explanatory figure
(1) Remove the service panel. 1) See the right figure and the section [3-5 External Appearance and Refrigerant Circuit Components of BC Controller] for information on pressure sensors PS1 and PS3. **(2) Remove the pressure sensor connector in trouble from the control board, and insulate the connector.** 1) Liquid-side pressure sensor (CNP1) 2) Intermediate-part pressure sensor (CNP3) **(3) Attach a new pressure sensor to the place which is shown in the figure, and insert the connector to the control board.** **Note** When gas leaks from the pressure sensor, repair the leak, and follow the instructions above if required.	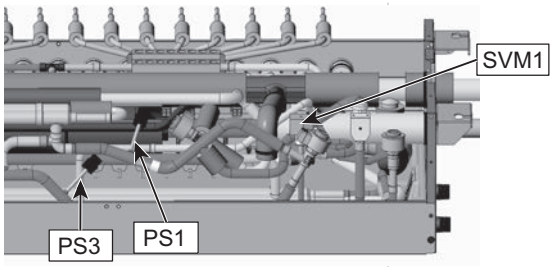 CMB-P1016NU-KA1/2

6. LEV

Work procedure	Explanatory figure
(1) Remove the service panel. **(2) Replace the LEV in trouble.** **Note** Secure enough service space in the ceiling for welding operation, and conduct the work carefully.If required, dismount the unit from the ceiling, and conduct the work.	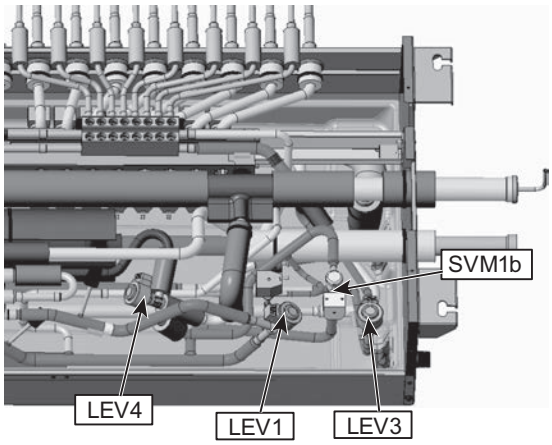 CMB-P1016NU-KA1/2

7. Solenoid valve

*Special care must be taken when replacing heavy parts.

Work procedure	Explanatory figure
(1) Remove the service panel. **(2) Remove the connector of the solenoid valve in trouble.** **(3) Remove the solenoid valve coil.** 1) The coils on the solenoid valves SVA, SVB, SVC, SVM1, and SVM1b can be serviced through the inspection door. SVC is accessible for replacement by removing the drain pan.	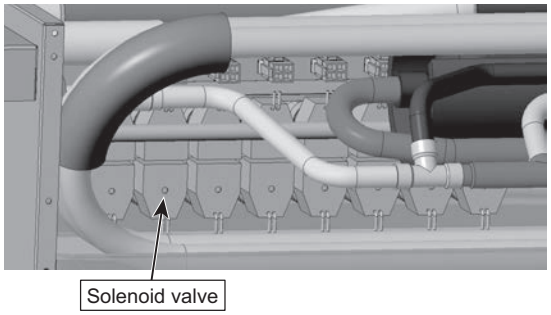 CMB-P1016NU-KA1/2

8-15 Troubleshooting Problems Using the LED Status Indicators on the Outdoor Unit

If the LED error display appear as follows while all the SW4 switches and SW6-10 are set to OFF, check the items under the applicable item numbers below.

1. Error code appears on the LED display.

Refer to the following page(s). [7-1 Error Code and Preliminary Error Code Lists]

2. LED is blank.

Take the following troubleshooting steps.

(1) Refer to the section on troubleshooting the transmission power supply circuit, if the voltage across pins 1 through 3 of CNDC on the control panel is outside the range between 220 VDC and 380 VDC. [8-11-2 Troubleshooting Problems with Outdoor Unit Transmission Power Supply Circuit]

(2) If the LED error display becomes lit when the power is turned on with all the connectors on the control board except CNDC disconnected, there is a problem with the wiring to those connectors or with the connectors themselves.

(3) If nothing appears on the display under item (2) above AND the voltage between pins 1 and 3 of CNDC is within the range between 220 VDC and 380 VDC, control board failure is suspected.

3. Only the software version appears on the LED display.

(1) Only the software version appears while the transmission cables to TB3 and TB7 are disconnected.

1) Wiring failure between the control board and PS board. (CN62, CNPS, CNIT, CNS2, CN102)
2) If item 1) checks out OK, the transmission line power supply board failure is suspected.
3) If items 1) and 2) check out OK, control board failure is suspected.

(2) If the LED shows the same display as the initial display upon disconnection of transmission lines (TB3, TB7), there is a problem with the transmission lines or with the connected devices. [10-1-2 Initial LED Display]

Chapter 9 USB Function

9-1 Service Overview 1
9-1-1 Function Overview 1
9-1-2 System Structure 2
9-1-3 Necessary Materials 3
9-2 Operation Data Collection and Storage Functions 4
9-2-1 Preparation 4
9-2-2 Storing Data on a USB Memory Stick 4
9-2-3 Collecting Operation Data 6
9-2-4 Precautions 7
9-3 Software Rewrite Function on the USB 8
9-3-1 Preparation 8
9-3-2 Rewriting Software 8
9-3-3 Precautions 9
9-4 Maintenance LED Display and Troubleshooting 10
9-4-1 Maintenance LED Display Content List 10
9-4-2 Troubleshooting 13

9-1 Service Overview

9-1-1 Function Overview

The control board has a USB port that allows the use of the following two functions.

1. Collection and storage of operation data

Operation information from indoor units, outdoor units, and other equipment and devices in the system are collected and stored in the flash memory in the control board of the outdoor unit (OC).
The data can be transferred and stored in a USB memory stick.

- Operation data in the multiple-outdoor-unit system will be saved on the OC unit.
- Attempting to collect the operation data from the OS unit will result in an error.

2. Software rewrite function

The software on outdoor units can be rewritten using a USB memory stick.

For detailed information about each function, refer to Section [9-2 Operation Data Collection and Storage Functions] and Section [9-3 Software Rewrite Function on the USB].
For information regarding the maintenance LED display content and regarding troubleshooting, refer to Section [9-4 Maintenance LED Display and Troubleshooting].

9-1-2 System Structure

(1) Control board on the outdoor unit

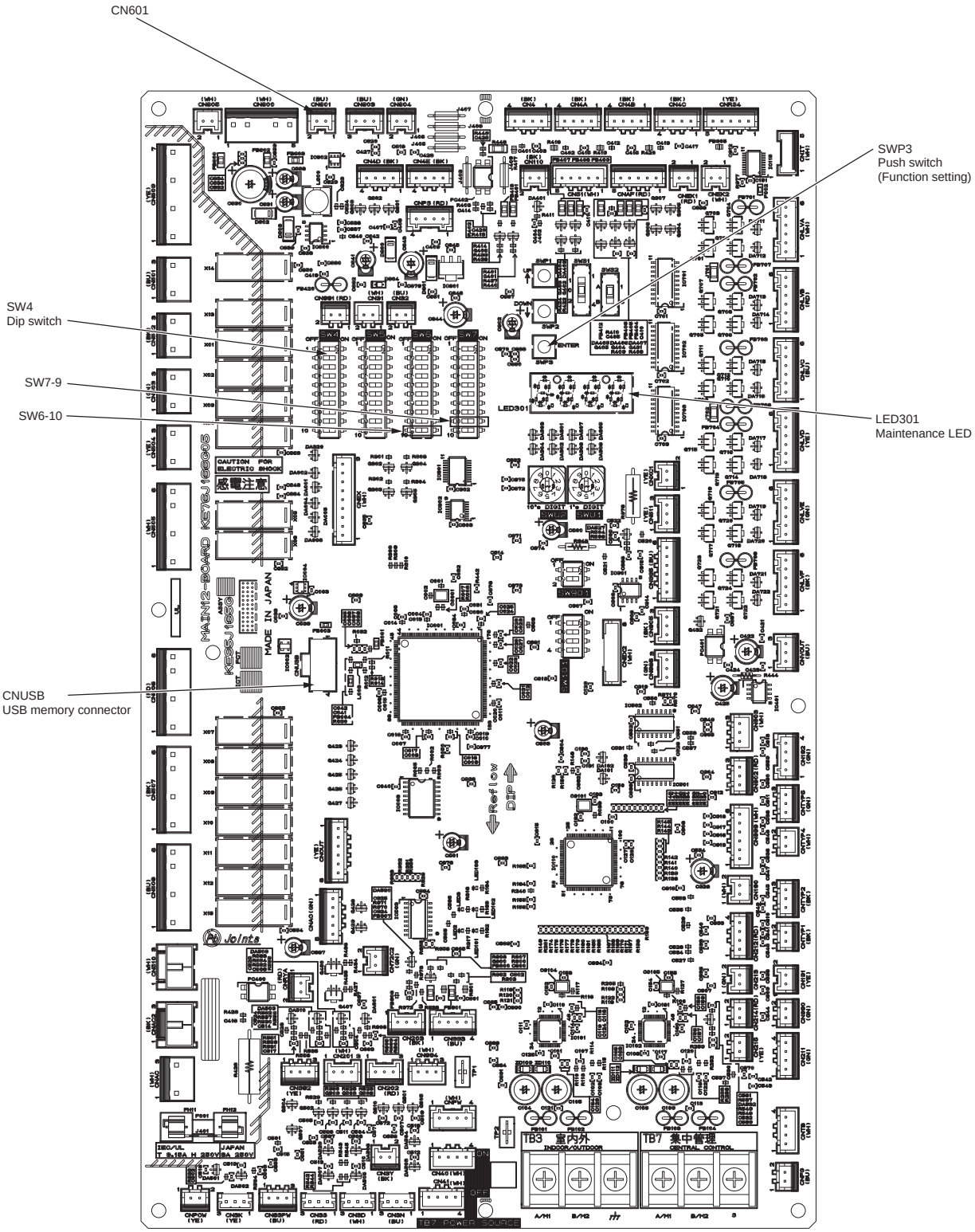

9-1-3 Necessary Materials

The use of the USB function requires a USB memory stick and a portable battery charger.
See below for the types of USB memory stick and portable charger that can be used.

(1) USB memory stick

Use a USB memory stick that meets the following specifications.

- USB 2.0 compatible
- Formatted in FAT 32
- Without a security function

(2) Portable battery charger

Use a portable battery charger that meets the following specifications for rewriting the software.

- USB 2.0 compatible
- Voltage and amperage rating of 5 V and 2.1 A (MAX)
- Supports the energy-saving mode
  A battery charger not compatible with the energy-saving mode may turn off while the data are being collected or while the S/W is being re-written, and these actions may not be completed successfully.

A LEAD WIRE ASSY USB is required to connect the control board and the portable charger.
Use a cable that meets the following specifications.

- [Type A male] - [Male XA connector for the PCB] USB cable. For details of “LEAD WIRE ASSY USB”, please contact the sales office.

The connector on the control board side is a female XA connector for the PCB.

9-2 Operation Data Collection and Storage Functions

Operation data of the units collected on the outdoor unit can be recorded in the flash memory of the control board. These data can also be exported to and recorded in a USB memory stick.
See Section [9-2-2 Storing Data on a USB Memory Stick] for information on storing data on a USB memory stick.
See Section [9-2-3 Collecting Operation Data] for information on the collection of operation data.

9-2-1 Preparation

A USB memory stick and a portable battery charger are required to store data on a USB memory stick (not supplied).
Prepare a USB memory stick and a portable battery charger as described in Section [9-1-3 Necessary Materials].

9-2-2 Storing Data on a USB Memory Stick

Store operation data recorded in the flash memory on the control board in a USB memory stick.
The content of the stored file can be confirmed using the maintenance tool.
Operation data should be stored in a dedicated mode (Store Mode).

1. Procedure

(1) Preparation of a USB memory stick

1) Since the size of the saved file containing operation data is 50 MB, prepare a USB memory stick with 50 MB or more available memory. A USB memory stick which has other data in it may also be used. However, it is recommended to clear the remaining data in advance to prevent any malfunctions.The saved file is named "MNTXXX.MT." XXX represents a serial number from 000 to 100. Since files named "MNT101.MT" or more cannot be created, unnecessary folders and files should be deleted.

(2) Storing data on a USB memory stick

Data can be stored to a USB memory stick either with the main power to the outdoor unit turned on (Method 2) or off (Method 1). For safety reasons, it is recommended to store the data on a USB memory stick with the main power to the outdoor unit turned off (Method 1). If turning off the power is not feasible, take appropriate measures to ensure safety.

[Method 1 (recommended)] Storing data on a USB memory stick with the main power to the outdoor unit turned off

<Starting up the unit in the data storage mode>

- Turn off the main power to the outdoor unit.
- Connect a USB memory stick to the USB port (CNUSB) on the control board. Wait for five seconds until the USB memory stick is recognized.
- With SWP3 (ENTER) being held down, connect the portable battery charger to the XA connector (CN601) for the PCB, and supply power to the control board.
- [USB] will appear on the monitoring LED301. If "USB" does not appear, refer to Section 1.(1) in [9-4-2 Troubleshooting].

- When [USB] has appeared on the LED, lift the finger off SWP3 (ENTER).
  The unit is now in the data storage mode.

<Storing data>

- Press SWP3 (ENTER). If the data storage process has properly started, the progress (0-99) will be shown on the monitoring LED 301.
- [End] on the LED indicates successful completion of the data storage process.
  *It takes approximately five minutes for the data storage process to be completed.

<Ending the data storage mode>

- When done storing data, disconnect the portable battery charger from the control board.
- Then disconnect the USB memory stick from the control board.
- Turn the main power to the outdoor unit back on.
- If the data collection process needs to be started, check the operation data collection status by following the procedures explained in [9-2-3 Collecting Operation Data]and making the necessary settings.

[Method 2] Storing data on a USB memory stick with the main power to the outdoor unit turned on

<Starting up the unit in the data storage mode>

- Stop the operation of all indoor units.
  *Although operation data can be collected without stopping all indoor units, doing so may be detected as a communication error.
- Connect a USB memory stick to the USB port (CNUSB) on the control board. Wait for five seconds until the USB memory stick is recognized.
- Press and hold SWP3 (ENTER) for approximately 10 seconds until [USB] appears on the monitoring LED 301.

- When [USB] has appeared on the LED, lift the finger off SWP3 (ENTER).
  The unit is now in the data storage mode.

<Storing data>

- Press SWP3 (ENTER). If the data storage process has properly started, the progress (0-99) will be shown on the monitoring LED 301.
- [End] on the LED indicates successful completion of the data storage process.
  *It takes approximately five minutes for the data storage process to be completed.

<Ending the data storage mode>

- When done storing data, disconnect the USB memory stick from the control board.
- Press and hold SWP3 (ENTER) for approximately 10 seconds until [End] disappears from the monitoring LED 301.
- Restart the indoor and outdoor units that were stopped to perform data storage.
- If the data collection process needs to be started, check the operation data collection status by following the procedures explained in [9-2-3 Collecting Operation Data]and making the necessary settings.

(3) Confirmation of stored file

Confirm that the operation data is stored in the USB memory stick. Insert the USB memory stick into a computer, and check the contents in the memory stick.

Check that there is the following file in the memory stick.
File: MNTXXX.MT
“XXX” represents serial numbers from “000” to “100.”

9-2-3 Collecting Operation Data

This function is used to collect the operation data of the outdoor and indoor units via M-NET, and record the data in the flash memory on the control board. When the memory is full, it is overwritten from the first segment.
The settings for checking the status of operation data collection, for starting/ending data collection, and for continuing/stopping error-data collection are made, using the switches on the control board. The items to be set are shown in the table below.
The data collection setting is enabled by default, and the setting for error data collection during an error is disabled by default.

Switch			Function	Operation set by the switch		Timing for switch operation	Unit for setting
SW6-10	SW4 (0: OFF, 1: ON)			OFF (LED3 OFF)	ON (LED3 ON)		
OFF	NO.28	00111000000	Data being collected	-	-	Anytime after power-on	OC setting necessary
ON	NO.817	10001100110	Data collection enabled	Enabled	Disabled	Anytime after power-on	OC setting necessary
ON	NO.818	01001100110	Data collection during an error	Disabled	Enabled	Anytime after power-on	OC setting necessary

*When setting the switch SW4 on the control board, make sure the outdoor unit is energized.
Also use Section [5-1 Dipswitch Functions and Factory Settings] as a reference.

The procedure for making the operation data settings is shown below.

1. Operation procedure

(1) Status Confirmation

1) Confirm the current status of operation data collection by setting the switches on the control board following the table shown above.
   Switch setting: SW6-10: OFF
   SW4: 28
   Check the status on the maintenance LED display (LED301).
   * For details, refer to Section [9-4-1 Maintenance LED Display Content List]

- When “ON” or “OFF” is displayed, go to step (2) and the later steps.
- When “Err” is displayed, go to step (3) and the later steps.
- When “F-Er” is displayed, it indicates an error in the flash memory on the control board.
  Refer to Section [9-4-2 Troubleshooting]

(2) Setting Start and End of data collection

1) Set the switches on the control board by following the table shown above.
   Switch setting: SW6-10: ON
   SW4: 817
2) Press SWP3 (ENTER).With each switch operation, the setting can be alternately switched ON and OFF.
3) After conducting step (1), check that the operating condition is stable.
   Data collection start: OFF (Enabled)
   Data collection end: ON (Disabled)
   Setting procedure is now complete.

(3) Settings for error-data collection during an error

Stops or continues error-data collection when an error occurs.

1) Referring to the table above, set the control switches.
   Switch setting: SW6-10: ON
   SW4: 818
   Stop collecting error-data when an error occurs: OFF
   Continue collecting error-data when an error occurs: ON
2) To set the switches, press SWP3 (ENTER). Each pressing of SWP3 (ENTER) toggles between ON and OFF. Error data in the 6000's and the 7000's will be collected, regardless of the SW4 (818) settings.

(4) Restarting data collection

1) If “Err” is shown, it indicates that data collection is being suspended for some reason, even though data collection is enabled. To restart, it is necessary to set the switches on the control board. Referring to (2)-1) and (2)-2), set the switches on the control board from OFF (original setting) to ON, and then to OFF again, and make sure the switches settings are indicated as being ON, following the instructions in (1)-1).

9-2-4 Precautions

For dealing with display on the maintenance LED and other problems, refer to Section [9-4 Maintenance LED Display and Troubleshooting].

1. Storage of data in a USB memory stick

- Take extra care regarding electric shock during the work on the control board, such as the insertion of the USB memory stick.
- Before starting in Normal Mode, remove the USB memory stick from the control board.
- Storing data in the USB memory stick may take a long time resulting in OS and communication errors. These errors affect neither storing process nor unit operation. If an error occurs, refer to [9-4-2 Troubleshooting].
- After normal startup, set the operation status of the air-conditioning units to the original status.
- USB memory sticks may become unusable due to unexpected damage or memory shortage. It is recommended to take extra USB memory sticks to the site.
- If only the OS is operated due to problems with the OC, collect data also from the OS by following the same operation procedure as for OC. Refer to Section [9-2-2 Storing Data on a USB Memory Stick].

2. Collection of operation data

- The collection of operation data does not start immediately after power-on, but does after ten minutes.
- When the operation data are being collected from AE-200/AE-50/EW-50 or the Maintenance Tool, the function to collect outdoor unit (OC) data with a USB memory stick will not be available for use.

9-3 Software Rewrite Function on the USB

The USB memory stick may be used to rewrite the software of the outdoor unit in the same way as using a ROM writer.

9-3-1 Preparation

- Prepare a USB memory stick and a portable battery charger.
  A LEAD WIRE ASSY USB for connecting the control board and the charger is also necessary.
  Make sure the portable battery charger is sufficiently charged.
- Prepare a countermeasure program file "******.mot" for the intended model.
- Copy the software rewrite program file "******.mot" onto the root folder of the USB memory stick.
  Install only one program and only in the root folder of the USB memory stick.

9-3-2 Rewriting Software

The procedure is shown below.

1. Operation procedure

(1) Starting software rewrite mode

1) Shut down the power for the outdoor unit. Make sure the power for the control board is off.
   This is done by confirming LED2 is off.
2) Turn on switches SW7-9 of the control board.
3) Insert the USB memory stick into the USB port (CNUSB) on the control board. Wait for five seconds until the USB memory stick is recognized.
4) Connect the portable battery charger to the XA connector (CN601) for the PCB.
   The power of the control board will turn on.
5) Make sure the display “Pro” is shown on the maintenance LED (LED301)
   This shows that Software Rewrite Mode has been started.

(2) Performing software rewriting

1) Wait for 5 seconds after “Pro” appeared on the LED, and press SWP3 (ENTER) to start software rewrite.
   When the rewrite process is in progress, progress bars move as shown below.

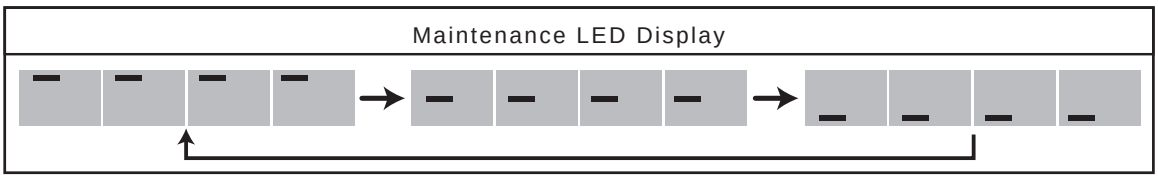

2) If "End" is displayed on the LED, the rewrite process has been completed correctly. * Generally, this process takes about five minutes.

(3) Confirmation of operation

1) Disconnect the portable battery charger from the XA connector (CN601) for the PCB. The control board will be turned off.
2) Remove the USB memory stick from the USB port (CNUSB) on the control board.
3) Turn off the switches SW7-9 on the control board.
4) Turn on the outdoor unit, and check that the versions of the outdoor unit and the software are the same.
   The version of the software may be found using the maintenance tool or other means.
   Perform a test run, and check for normal operation.

9-3-3 Precautions

For dealing with the displays shown on the maintenance LED and other problems, refer to Section [9-4 Maintenance LED Display and Troubleshooting]

- Take care to choose the correct countermeasure program for the intended model and version.
  Store only one software rewrite program on the USB memory stick.
  If this requirement is not met, software rewrite may not start.
- Be cautious of electric shock when connecting an USB memory stick or a portable battery charger to the control board.
- Connect the portable battery charger to the LEAD WIRE ASSY USB and then to the control board.
- Use a portable charger that supports the energy-saving mode.
- Make sure the portable battery charger is sufficiently charged. Rewrite error may occur if battery charge is insufficient.
- Take care not to forget to remove the USB memory stick in step (3) - 2) or forget to turn off the switch in step (3) - 3). [9-3-2 Rewriting Software] If these precautions are not taken, the system may not start normally.
- When rewriting ended unsuccessfully, redo the procedure from step (1) - 3). [9-3-2 Rewriting Software]When rewriting ended unsuccessfully, the system may be started in Software Rewrite Mode instead of using the switches on the control board. Also refer to Section [9-4-2 Troubleshooting].
- If software cannot be successfully rewritten using an USB memory stick, use a ROM writer to rewrite the software.
- A battery charger not compatible with the energy-saving mode may turn off while the data are being collected or while the S/W is being re-written, and these actions may not be completed successfully.

9-4 Maintenance LED Display and Troubleshooting

9-4-1 Maintenance LED Display Content List

The following table shows the maintenance LED displays for each function.
When dealing with the errors shown on the display, refer to Section [9-4-2 Troubleshooting]

1. Storing data on a USB memory stick

No.	Switch	Meaning	Maintenance LED Display	Description
1	Not applicable	Storage Mode activated	USb	“USB” Storage Mode to USB memory stick is active. Storage is enabled. See Section [9-4-2 Troubleshooting]1-(1) and 1- (2).
2		Storage in progress	0 ~ 99	0 to 99 is displayed. Status of the data storage to the USB memory stick is shown by the progress rate.
3		Storage completed	End	“END” The storage process has been completed successfully.
4		Error (USB memory side)	Er01	“Er01” The storage process cannot be started due to failure of the USB memory stick. See Section [9-4-2 Troubleshooting]1- (3).
			Er02	“Er02” The storage process was stopped due to failure of the USB memory stick during processing. See Section [9-4-2 Troubleshooting]1- (4).
5		Error (control board side)	Er10	“Er10” The storage process cannot be started due to failure of the control board. See Section [9-4-2 Troubleshooting]1- (5).

2. Collecting operation data

No.	Switch	Meaning	Maintenance LED Display	Description
6	SW6-10: OFF SW4: No.28	Collection in progress	on	“ON” OC is collecting operation data. A blinking display indicates that data collection is temporarily suspended. No switch setting is necessary. Data collection will be resumed automatically. See Section [9-4-2 Troubleshooting]2-(1).
7		Collection suspended	off	“OFF” Collection of operation data is suspended.
8		Flash memory error	F-Er	“F-Er” Collection of operation data is suspended due to failure in the flash memory used to store operation data. It may be necessary to change the board. See Section [9-4-2 Troubleshooting]2-(2).
9		Error	Err	“Err” Error was found due to the failure in units. After addressing the cause, data collection needs to be restated. See Section [9-4-2 Troubleshooting]2- (3).

- Collect data from both OC and OS from multiple-outdoor unit systems.
  System operation data are stored on OC, and compressor operation time of OS and switch settings are stored on OS.
- When importing the OS data to the Maintenance Tool, an import error may appear. This error indicates that no data are available for import and does not indicate equipment failure.

3. Rewriting software

No.	Switch	Meaning	Maintenance LED Display	Description
10	SW7-9: ON	Rewrite Mode activated	Pro	“PRO” Software rewrite mode is active. Software rewrite is enabled. See Section [9-4-2 Troubleshooting]3-(1), 3-(2) and 3- (3).
11		Rewrite in progress	_ _ _ _	Software rewrite is in progress. Bars are displayed in turn.
			- - - -	
			- - - -	
12		Software rewrite has been completed.	End	“END” Software rewrite has been completed successfully.
13		Error (USB memory side)	Er01	“Er01” Software rewrite process cannot be started due to failure of the USB memory stick. See Section [9-4-2 Troubleshooting]3- (4).
			Er02	“Er02” Software rewrite was stopped due to failure of the USB memory stick during the software rewrite process. See Section [9-4-2 Troubleshooting]3- (5).
14		Error (control board side)	Er10	“Er10” Software rewrite was not completed due to failure in deleting the existing software. See Section [9-4-2 Troubleshooting]3- (6).
			Er11	“Er11” Software rewrite has not been completed due to failure in writing new software. See Section [9-4-2 Troubleshooting]3- (6).

9-4-2 Troubleshooting

Troubleshooting of USB functions are shown below.
The displays on the maintenance LED described in Section [9-4-1 Maintenance LED Display Content List]may also be used as a reference.

1. Storing on a USB memory stick

(1) Maintenance LED does not display "USB."

(Meaning or Cause)

The system was not started in Storage Mode.
The USB memory stick is not connected. Or, switch SWP3 may not be pressed deeply enough.

(Solution)

Check the connection of the USB memory stick, and try again using Section [9-2-2 Storing Data on a USB Memory Stick]as a reference.
Hold down the switch SWP3 until "USB" is displayed on the maintenance LED.
If the problem persists, there may be a problem with the USB memory stick.
Check if the USB memory stick meets the specification described in Section [9-1-3 Necessary Materials](1) USB memory stick.
If compliance is confirmed, the USB memory stick may be broken. Replace it with a new one.

(2) Pressing the switch SWP3 does not start data storage, and the maintenance LED continues to display "USB."

(Meaning or Cause)

There may be a problem with the USB memory stick.

(Solution)

Check the connection of the USB memory stick.
If no problem is found, the USB memory stick may be at fault.
Check that the USB memory stick meets the specification described in Section [9-1-3 Necessary Materials](1) USB memory stick.
If compliance is confirmed, the USB memory stick may be broken. Replace it with a new one.

(3) Maintenance LED displays "Er01."

(Meaning or Cause)

- Because there was a problem regarding the USB memory before the start of data storage, data storage has not been completed.
- Error Er01 occurs when SWP3 on the control board is pressed to rewrite the software immediately after power is supplied to the USB-connected control board.
  (When the software rewriting is started before the control board recognizes the USB memory stick.)

(Solution)

Check the connection of the USB memory stick.
If no problem is found, the USB memory stick may be at fault.
Check the following four items.

- After supplying power to the USB-connected control board, wait at least five seconds before pressing SWP3 on the control board to rewrite software because it takes approximately five seconds for the control board to recognize the USB memory stick.
- Compliance of the USB memory stick to the specification described in Section [9-1-3 Necessary Materials](1) USB memory stick.
- Available free space of the USB memory stick exceeding 50 MB.
- The maximum number of folders or files is not exceeded. When files are created in the USB memory stick, the upper limit of files is 101, including those files from "MNT000.MT" to "MNT100.MT."
  Delete unnecessary folders or files.

When there is no problem in the four items above, the USB memory stick may be broken. Replace it with a new one.

(4) Maintenance LED displays "Er02."

(Meaning or Cause)

Because there was a problem regarding the USB memory during data storage, data storage is unfinished.
For example, if the USB memory stick is disconnected during data storage, this display appears on the maintenance LED.

(Solution)

Check the connection of the USB memory stick.
If no problem was found, remove the USB memory stick from the control board and insert it again. Then conduct data storage referring to Section [9-2-2 Storing Data on a USB Memory Stick].

(5) Maintenance LED displays "Er10."

(Meaning or Cause)

Because there was a problem regarding the control board during data storage, data storage is unfinished.

(Solution)

Perform data storage again.
Remove the USB memory stick from the control board and insert it again. Then conduct data storage using Section [9-2-2 Storing Data on a USB Memory Stick]as a reference.

If this still does not correct the problem, there may be a problem with the control board.

(6) System does not start in Normal Mode.

(Meaning or Cause)

The USB memory stick may be left connected.

(Solution)

Remove the USB memory stick from the control board by referring to <Ending the data storage mode> under Section [9-2-2 Storing Data on a USB Memory Stick]. Then press SWP3 (ENTER). If the problem is not resolved, turn off the power to the outdoor unit, and restart the unit.

(7) Unit cannot be started in the data storage mode.

(Meaning or Cause)

There may be problems with the control board.

(Solution)

Take the two measures 1 and 2 explained in (2) Storing data on a USB memory stick in 1 Procedure under [9-2-2 Storing Data on a USB Memory Stick].
If the unit cannot be started up in the data storage mode by following either of the two methods 1 or 2, the control board may be malfunctioning.

2. Collecting operation data

(1) Maintenance LED displays blinking "ON."

(Meaning or Cause)

Despite data collection function being enabled, it is not started yet.
There may be two causes.
Firstly, the initialization process immediately after the system startup may have inhibited the start of data collection.
Secondly, M-NET communication may be underway to enable maintenance tools or collect AE-200/AE-50/EW-50 logs.

(Solution)

After a certain time, the problem will resolve itself, requiring no corrective actions.

(2) Maintenance LED displays "F-Er."

(Meaning or Cause)

Because there was a problem with the flash memory used to store operation data, the collection of operation data is unfinished.

(Solution)

Restart the outdoor unit, check the status of data collection.
If the LED displays "F-Er," the flash memory may be broken.
Depending on the local conditions, replace the control board.
When the flash memory is not working correctly, data collection and storage to a memory stick cannot be performed, but the outdoor unit itself functions normally.

(3) Maintenance LED displays blinking "Err."

(Meaning or Cause)

An error occurred in the unit, suspending data collection.

(Solution)

After resolving the error, resume data collection, referring to 1. Operation procedure (4) Restarting data collection under Section [9-2-3 Collecting Operation Data].

3. Rewriting software

(1) Maintenance LED does not display "Pro."

(Meaning or Cause)

The system is not started in Software Rewrite Mode.
Switches SW7-9 on the control board may not be in the ON position, or the portable charger may not be charged sufficiently.

(Solution)

Make sure switches SW7-9 are ON using Section [9-3-2 Rewriting Software]as a reference.
Restart using a fully charged portable charger or a different charger.

Check that the power-supply units (outdoor units/power-supply expansion unit) are turned off.

(2) Pressing the switch for starting the storage process does not start the process, and Maintenance LED continues to display "Pro."

(Meaning or Cause)

There may be a problem with the USB memory stick.

(Solution)

Check the connection of the USB memory stick.
If no problem is found, the USB memory stick may be at fault.
Check if the USB memory stick meets the specification described in Section [9-1-3 Necessary Materials](1) USB memory stick.
If compliance is confirmed, the USB memory stick may be broken. Replace it with a new one.

(3) At the time of the system start after "END" was displayed, Maintenance LED displays "Pro."

(Meaning or Cause)

The system was started in Software Rewrite Mode.
Switches SW7-9 on the control board may not be in the OFF position.
If the switches are in the OFF position, it means the software rewrite process has failed.

(Solution)

After turning off control board switches SW7-9, turn on the system again.
If the switches are in the OFF position, it means the software rewrite process has failed.
Try rewriting the software again by following the procedure detailed in 1 (1) Starting software rewrite mode under Section [9-3-2 Rewriting Software]. If the problem persists, rewrite the software, using a ROM writer.

(4) Maintenance LED displays "Er01."

(Meaning or Cause)

- Because an error occurred in the USB memory stick before the start of software rewrite, software rewrite has not been completed.
- Error Er01 occurs when SWP3 on the control board is pressed to rewrite the software immediately after power is supplied to the USB-connected control board.
  (When the software rewriting is started before the control board recognizes the USB memory stick.)

(Solution)

Check the connection of the USB memory stick.
If no problem is found, the USB memory stick may be at fault.
Check the following five items.

- After supplying power to the USB-connected control board, wait at least five seconds before pressing SWP3 on the control board to rewrite software because it takes approximately five seconds for the control board to recognize the USB memory stick.
- Compliance of the USB memory stick to the specification of Section [9-1-3 Necessary Materials](1) USB memory stick.
- The countermeasure program file "******.mot" for the intended model is used.
  The countermeasure program is not for a different model or version.
- The countermeasure program file "******.mot" is stored in the root folder. It is not stored in another folder.
- Make sure that the program file "******.mot" is stored in the root folder of the USB memory and not in any folder created on the USB memory stick.

When there is no problem in the five items above, the USB memory stick may be broken. Replace it with a new one. After the check is completed, follow the procedure starting with the step explained in 1. Operation procedure (1) Starting software rewrite mode under [9-3-2 Rewriting Software].

(5) Maintenance LED displays "Er02."

(Meaning or Cause)

Software rewrite is suspended due to a problem with the USB memory stick during the software rewrite process.
For example, if the USB memory stick is disconnected during data storage, this display appears on the maintenance LED.

(Solution)

Check the connection of the USB memory stick.
If no problems are found, follow the procedure starting with the step explained in 1. Operation procedure (1) Starting software rewrite mode under [9-3-2 Rewriting Software].

(6) Maintenance LED displays "Er10” or "Er11.”

(Meaning or Cause)

Because there was a problem in the control board during the software rewrite process, software rewrite has not been completed.

(Solution)

Try rewriting the software again by following the procedure detailed in 1. Operation procedure (1) Starting software rewrite mode under Section [9-3-2 Rewriting Software]. If the problem persists, rewrite the software, using a ROM writer.

(7) Service monitor LED lights off while the S/W is being re-written, and the process cannot be completed.

(Meaning or Cause)

The re-writing process may not have been completed due to a power-supply interruption from the battery charger.

(Solution)

- Make sure the battery charger is compatible with the low-current mode.
- If a battery charger that is compatible with the low-current mode is not available, re-write the S/W using a ROM writer.

Chapter 10 LED Status Indicators on the Outdoor Unit Circuit Board

10-1 LED Status Indicators 1

10-1-1 How to Read the LED 1

10-1-2 Initial LED Display 2

10-1-3 Clock Memory Function 3

10-2 LED Status Indicators Table 4

10-1 LED Status Indicators

10-1-1 How to Read the LED

By setting the DIP SW 4-1 through 4-10 (Set SW6-10 to OFF.)(Switch number 10 is represented by 0), the operating condition of the unit can be monitored on the service monitor. (Refer to the table on the following pages for DIP SW settings.)
The service monitor uses 4-digit 7-segment LED to display numerical values and other types of information.

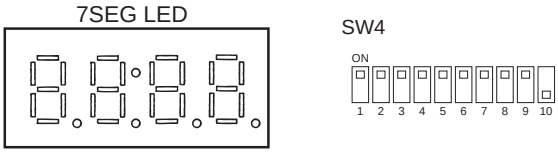

♦In the example above, 1 through 9 are set to ON, and 10 is set to OFF.

Pressure and temperature are examples of numerical values, and operating conditions and the on-off status of solenoid valve are examples of flag display.

1) Display of numerical values

   Example: When the pressure data sensor reads 18.8kg/cm^2 (Item No. 58)

   ♦The unit of pressure is in kg/cm^2

   ♦ Use the following conversion formula to convert the displayed value into a value in SI unit.

   Value in SI unit (MPa) = Displayed value (kg/cm^2) x 0.098

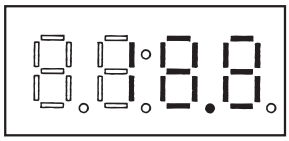

2) Flag display

   Example: When 21S4a, 21S4b, SV1a are ON. (Item No. 3)

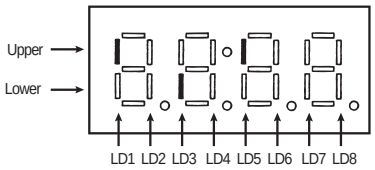

   Example: 3-minutes restart mode (Item No. 14)

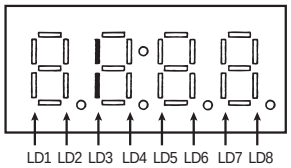

10-1-2 Initial LED Display

From power on until the completion of initial settings, the following information will be displayed on the monitor screen. (Displays No. 1 through No. 4 in order repeatedly.)

No	Item	Display	Remarks
1	Software version	0103	[0103] : Version 1.03
2	Refrigerant type	410	[410] : R410A
3	Model and capacity	H-20	[H-20] : Cooling/Heating 20 HP For the first few minutes after power on, the capacity of each outdoor unit is displayed. Thereafter, the combined capacity is displayed.
4	Communication address	51	[51] : Address 51

After the initial settings have been completed, the information on these items can be checked by making the switch setting that corresponds to No. 517 in the LED display table.

Note

Only item No. 1 "Software Version" appears on the display if there is a wiring failure between the control board and the transmission line power supply board or if the circuit board has failed. LED may not light up at all.

10-1-3 Clock Memory Function

The outdoor unit has a simple clock function that enables the unit to calculate the current time with an internal timer by receiving the time set by the system controller, such as AG-150A.
If an error (including a preliminary error) occurs, the error history data and the error detection time are stored into the service memory.
The error detection time stored in the service memory and the current time can be seen on the service LED.

Note

1) Use the time displayed on the service LED as a reference.
2) The date and the time are set to "00" by default. If a system controller that sets the time, such as AG-150A is not connected, the elapsed time and days since the first power on will be displayed.
   If the time set on a system controller is received, the count will start from the set date and the time.
3) The time is not updated while the power of the indoor unit is turned off. When the power is turned off and then on again, the count will resume from the time before the power was turned off. Thus, the time that differs the actual time will be displayed. (This also applies when a power failure occurs.)
   The system controller, such as AG-150A, adjusts the time once a day. When the system controller is connected, the time will be automatically updated to the correct current time after the time set by the system controller is received. (The data stored into the memory before the set time is received will not be updated.)

(1) Reading the time data:

1) Time display
   Example: 12 past 9

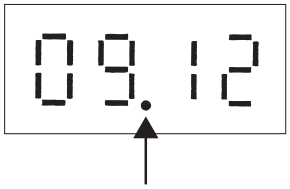

* Disappears if the time data is deviated due to a power failure, or if a system controller that sets the time is not connected.

2) Date display
   ♦When the main controller that can set the time is connected
   Example: May 10, 2003

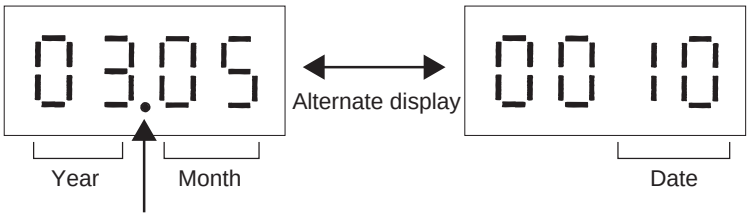

* Appears between the year and the month, and nothing appears when the date is displayed.

♦When the main controller that can set the time is not connected
Example: 52 days after power was turned on

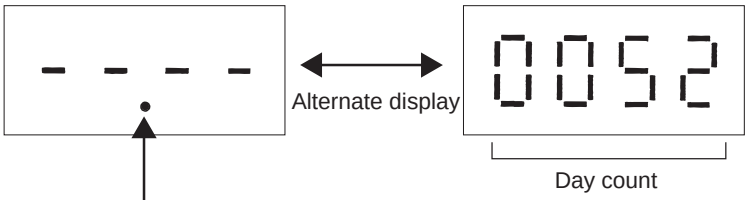

* Appears between the year and the month, and nothing appears when the date is displayed.

10-2 LED Status Indicators Table

Current data

No.	SW4 (SW6 - 9: OFF, SW6-10: OFF)	Item		Display								Unit (A, B) *1		Remarks
	1234567890			LD1	LD2	LD3	LD4	LD5	LD6	LD7	LD8	OC	OS	
0	0000000000	Relay output display 1		Comp in operation				72C		OC	CPU in operation	A	A	
		Check (error) display 1 OC/OS error		0000 to 9999 (Address and error codes highlighted)								B	B	
1	1000000000	Check (error) display 2 OC/OS error		0000 to 9999 (Address and error codes highlighted)								A	A	Display of the latest preliminary error If no preliminary errors are detected, "----" appears on the display.
2	0100000000	Check (error) display 3 (Including IC and BC)		0000 to 9999 (Address and error codes highlighted)								B		If no errors are detected, "----" appears on the display.
3	1100000000	Relay output display 2	Top	21S4a		CH11		SV1a		SV2		A	A	
			Bottom	SV3		21S4b								
4	0010000000	Relay output display 3	Top					21S4c				A	A	
			Bottom											
5	1010000000	Relay output display 4	Top	Optional 200 V output		CH21						A	A	
			Bottom											
7	1110000000	Special control		Retry operation	Emergency operation					Communication error between the OC and OS	Communication error 3-minute restart delay mode	B	B	
9	1001000000	Communication demand capacity		0000 to 9999								B	B	If not demanded controlled, "----" [%] appears on the display.
10	0101000000	Contact point demand capacity		0000 to 9999								B		If not demanded controlled, "----" [%] appears on the display.
11	1101000000	External signal (Open input contact point)		Contact point demand	Low-noise mode (Capacity priority)	Snow sensor	Cooling-heating changeover (Cooling)	Cooling-heating changeover (Heating)				A	A	
12	0011000000	External signal (Open input contact point)								Locked cooling fan	Low-noise mode (Quiet priority)	A	A	
13	1011000000										Cooling fan output			
14	0111000000	Outdoor unit operation status		BC operation signal	Warm-up mode	3-minutes restart mode	Compressor in operation	Preliminary error	Error	3-minutes restart after instantaneous power failure	Preliminary low pressure error	A	A	
15	1111000000	OC/OS identification		OC/OS								A	A	

*1 A: The condition of either OC or OS is displayed individually. B: The condition of the entire refrigerant system is displayed.

Current data

No.	SW4 (SW6 - 9: OFF, SW6-10: OFF)	Item		Display								Unit (A, B) *1		Remarks
	1234567890			LD1	LD2	LD3	LD4	LD5	LD6	LD7	LD8	OC	OS	
16	0000100000	Indoor unit check	Top	Unit No. 1	Unit No. 2	Unit No. 3	Unit No. 4	Unit No. 5	Unit No. 6	Unit No. 7	Unit No. 8	B		The lamp that corresponds to the unit that came to an abnormal stop lights. The lamp goes off when the error is reset. Each unit that comes to an abnormal unit will be given a sequential number in ascending order starting with 1.
			Bottom	Unit No. 9	Unit No. 10	Unit No. 11	Unit No. 12	Unit No. 13	Unit No. 14	Unit No. 15	Unit No. 16			
17	1000100000		Top	Unit No. 17	Unit No. 18	Unit No. 19	Unit No. 20	Unit No. 21	Unit No. 22	Unit No. 23	Unit No. 24			
			Bottom	Unit No. 25	Unit No. 26	Unit No. 27	Unit No. 28	Unit No. 29	Unit No. 30	Unit No. 31	Unit No. 32			
18	0100100000		Top	Unit No. 33	Unit No. 34	Unit No. 35	Unit No. 36	Unit No. 37	Unit No. 38	Unit No. 39	Unit No. 40			
			Bottom	Unit No. 41	Unit No. 42	Unit No.43	Unit No. 44	Unit No. 45	Unit No. 46	Unit No. 47	Unit No. 48			
19	1100100000		Top	Unit No. 49	Unit No. 50									
			Bottom											
20	0010100000	Indoor unit Operation mode	Top	Unit No. 1	Unit No. 2	Unit No. 3	Unit No. 4	Unit No. 5	Unit No. 6	Unit No. 7	Unit No. 8	B		Lit during cooling Blinking during heating Unlit while the unit is stopped or in the fan mode
			Bottom	Unit No. 9	Unit No. 10	Unit No. 11	Unit No. 12	Unit No. 13	Unit No. 14	Unit No. 15	Unit No. 16			
21	1010100000		Top	Unit No. 17	Unit No. 18	Unit No. 19	Unit No. 20	Unit No. 21	Unit No. 22	Unit No. 23	Unit No. 24			
			Bottom	Unit No. 25	Unit No. 26	Unit No. 27	Unit No. 28	Unit No. 29	Unit No. 30	Unit No. 31	Unit No. 32			
22	0110100000		Top	Unit No. 33	Unit No. 34	Unit No. 35	Unit No. 36	Unit No. 37	Unit No. 38	Unit No. 39	Unit No. 40			
			Bottom	Unit No. 41	Unit No. 42	Unit No.43	Unit No. 44	Unit No. 45	Unit No. 46	Unit No. 47	Unit No. 48			
23	1110100000		Top	Unit No. 49	Unit No. 50									
			Bottom											
24	0001100000	Indoor unit thermostat	Top	Unit No. 1	Unit No. 2	Unit No. 3	Unit No. 4	Unit No. 5	Unit No. 6	Unit No. 7	Unit No. 8	B		Lit when thermostat is on Unlit when thermostat is off
			Bottom	Unit No. 9	Unit No. 10	Unit No. 11	Unit No. 12	Unit No. 13	Unit No. 14	Unit No. 15	Unit No. 16			
25	1001100000		Top	Unit No. 17	Unit No. 18	Unit No. 19	Unit No. 20	Unit No. 21	Unit No. 22	Unit No. 23	Unit No. 24			
			Bottom	Unit No. 25	Unit No. 26	Unit No. 27	Unit No. 28	Unit No. 29	Unit No. 30	Unit No. 31	Unit No. 32			
26	0101100000		Top	Unit No. 33	Unit No. 34	Unit No. 35	Unit No. 36	Unit No. 37	Unit No. 38	Unit No. 39	Unit No. 40			
			Bottom	Unit No. 41	Unit No. 42	Unit No.43	Unit No. 44	Unit No. 45	Unit No. 46	Unit No. 47	Unit No. 48			
27	1101100000		Top	Unit No. 49	Unit No. 50									
			Bottom											
28	0011100000	Drive recorder status		Drive recorder is stopped (OFF).: "OFF" Drive recorder is in operation (ON).: "ON" Drive recorder is in operation, but unable to start for a certain reason. *1: "ON" flashes. On-board flash error *2: "F-Er" Drive recorder has automatically stopped due to a serious error in the system. "Err"								B		
37	1010010000	BC operation mode		Cooling-only ON	Cooling-only OFF	Heating-only ON	Heating-only OFF	Mixed-mode ON	Mixed-mode OFF	Fan	Stop	B		
39	1110010000	Outdoor unit Operation mode		Permissible stop	Standby	Cooling	Cooling-main	Heating	Heating-main			A	A	
42	0101010000	Outdoor unit control mode		Stop	Thermo OFF	Abnormal stop	Scheduled control	Initial start up	Defrost	Oil balance	Low frequency oil recovery	A	A	
43	1101010000			Warm-up mode	Refrigerant recovery			Continuous heating 2	Continuous heating 1			A	A	
45	1011010000	TH4		-99.9 to 999.9								A	A	The unit is [°C]
46	0111010000	TH3		-99.9 to 999.9								A	A	
47	1111010000	TH7		-99.9 to 999.9								A	A	
48	0000110000	TH6		-99.9 to 999.9								A	A	
50	0100110000	TH5		-99.9 to 999.9								A	A	
54	0110110000	TH9		-99.9 to 999.9								A	A	
56	0001110000	THHS1		-99.9 to 999.9								A	A	The unit is [°C]
58	0101110000	High-pressure sensor data		-99.9 to 999.9								A	A	The unit is [kgf/cm^2]
59	1101110000	Low-pressure sensor data		-99.9 to 999.9								A	A	

*1 A: The condition of either OC or OS is displayed individually. B: The condition of the entire refrigerant system is displayed.

10 LED Status Indicators on the Outdoor Unit Circuit Board

10 LED Status Indicators on the Outdoor Unit Circuit Board

Current data

No.	SW4 (SW6 - 9: OFF, SW6-10: OFF)	Item	Display								Unit (A, B) *1		Remarks
	1234567890		LD1	LD2	LD3	LD4	LD5	LD6	LD7	LD8	OC	OS	
62	0111110000	TH15	-99.9 to 999.9								A	A	The unit is [°C]
63	1111110000	TH11	-99.9 to 999.9								A	A	
74	0101001000	TH16	-99.9 to 999.9								A	A	
75	1101001000	TH17	-99.9 to 999.9								A	A	
76	0011001000	TH18	-99.9 to 999.9								A	A	
78	0111001000	∑ Qj	0000 to 9999								B	B	
79	1111001000	∑ Qjc	0000 to 9999								B	B	
80	0000101000	∑ Qjh	0000 to 9999								B	B	
81	1000101000	Target Tc	-99.9 to 999.9								B		The unit is [°C]
82	0100101000	Target Te	-99.9 to 999.9								B		
83	1100101000	Tc	-99.9 to 999.9								A	A	
84	0010101000	Te	-99.9 to 999.9								A	A	
86	0110101000	Total frequencies (OC+OS)	0000 to 9999								B		Control data [Hz]
87	1110101000	Total frequency of each unit	0000 to 9999								A	A	
88	0001101000	COMP frequency	0000 to 9999								A	A	
91	1101101000	COMP operating frequency	0000 to 9999								A	A	The unit is [rps] Output frequency of the inverter depends on the type of compressor and equals the integer multiples (x1, x2 etc.) of the operating frequency of the compressor.
92	0011101000	Number of times error occurred during crankcase heating by compressor motor	0000 to 9999								A	A	Number of times INV error occurred during IH crankcase heating by compressor motor
93	1011101000	All AK (OC+OS)	0000 to 9999								B		
94	0111101000	AK	0000 to 9999								A	A	
95	1111101000	FAN1	0000 to 9999								A	A	Fan output [%]
96	0000011000	Fan inverter output rpm (FAN1)	0000 to 9999								A	A	[rpm]
97	1000011000	FAN2	0000 to 9999								A	A	Fan output [%]
98	0100011000	Fan inverter output rpm (FAN2)	0000 to 9999								A	A	[rpm]
101	1010011000	LEV5a	0000 to 9999								A	A	
104	0001011000	LEV2	0000 to 9999								A	A	
105	1001011000	LEV4	0000 to 9999								A	A	
107	1101011000	LEV5b	0000 to 9999								A	A	
108	0011011000	COMP operating current (DC)	00.0 to 999.9								A	A	Peak value[A]
109	1011011000	LEV2b	0000 to 9999								A	A	
110	0111011000	LEV2c	0000 to 9999								A	A	
111	1111011000	COMP bus voltage	00.0 to 999.9								A	A	The unit is [V]
112	0000111000	LEV2d	0000 to 9999								A	A	
113	1000111000	LEV9	0000 to 9999								A	A	
114	0100111000	ALh	0: -, 1: Low, 2: Mid, 3: High								A	A	

*1 A: The condition of either OC or OS is displayed individually. B: The condition of the entire refrigerant system is displayed.

Current data

No.	SW4 (SW6 - 9: OFF, SW6-10: OFF)	Item	Display								Unit (A, B) *1		Remarks
	1234567890		LD1	LD2	LD3	LD4	LD5	LD6	LD7	LD8	OC	OS	
116	0010111000	Number of times the unit went into the mode to remedy wet vapor suction	0000 to 9999								B		
117	1010111000	COMP Operation time Upper 4 digits	0000 to 9999								A	A	The unit is [h]
118	0110111000	COMP Operation time Lower 4 digits	0000 to 9999								A	A	
121	1001111000	Backup mode	Abnormal pressure rise	High-pressure drop	Low-pressure drop	Abnormal Td rise	High-pressure during defrost cycle	Control box temperature rise			A	A	Stays lit for 90 seconds after the completion of backup control
123	1101111000	COMP number of start-stop events Upper 4 digits	0000 to 9999								A	A	Count-up at start-up The unit is [Time]
124	0011111000	COMP number of start-stop events Lower 4 digits	0000 to 9999								A	A	
129	1000000100	Integrated operation time of compressor (for rotation purpose)	0000 to 9999								B		The unit is [h]
178	0100110100	Error history 1	0000 to 9999								B	B	Address and error codes highlighted If no errors are detected, "---- " appears on the display. Preliminary error information of the OS does not appear on the OC. Neither preliminary error information of the OC nor error information of the IC appears on the OS.
179	1100110100	Error details of inverter	Error details of inverter (0001-0120)								A	A	
180	0010110100	Error history 2	0000 to 9999								B	B	
181	1010110100	Error details of inverter	Error details of inverter (0001-0120)								A	A	
182	0110110100	Error history 3	0000 to 9999								B	B	
183	1110110100	Error details of inverter	Error details of inverter (0001-0120)								A	A	
184	0001110100	Error history 4	0000 to 9999								B	B	
185	1001110100	Error details of inverter	Error details of inverter (0001-0120)								A	A	
186	0101110100	Error history 5	0000 to 9999								B	B	
187	1101110100	Error details of inverter	Error details of inverter (0001-0120)								A	A	
188	0011110100	Error history 6	0000 to 9999								B	B	
189	1011110100	Error details of inverter	Error details of inverter (0001-0120)								A	A	
190	0111110100	Error history 7	0000 to 9999								B	B	
191	1111110100	Error details of inverter	Error details of inverter (0001-0120)								A	A	
192	0000001100	Error history 8	0000 to 9999								B	B	
193	1000001100	Error details of inverter	Error details of inverter (0001-0120)								A	A	
194	0100001100	Error history 9	0000 to 9999								B	B	
195	1100001100	Error details of inverter	Error details of inverter (0001-0120)								A	A	
196	0010001100	Error history 10	0000 to 9999								B	B	
197	1010001100	Error details of inverter	Error details of inverter (0001-0120)								A	A	
198	0110001100	Error history of inverter (At the time of last data back-up before error)	0000 to 9999								B	B	
199	1110001100	Error details of inverter	Error details of inverter (0001-0120)								A	A	

*1 A: The condition of either OC or OS is displayed individually. B: The condition of the entire refrigerant system is displayed.

10 LED Status Indicators on the Outdoor Unit Circuit Board

Data before error

No.	SW4 (SW6-9: OFF, SW6-10: OFF)	Item		Display								Unit (A, B) *1		Remarks
	1234567890			LD1	LD2	LD3	LD4	LD5	LD6	LD7	LD8	OC	OS	
201	1001001100	Outdoor unit operation status		BC operation signal	Warm-up mode	3-minutes restart mode	Compressor in operation	Preliminary error	Error	3-minutes restart after instantaneous power failure	Preliminary low pressure error	A	A	
202	0101001100	OC/OS identification		OC/OS								A	A	
203	1101001100	BC operation mode		Cooling-only ON	Cooling-only OFF	Heating-only ON	Heating-only OFF	Mixed-mode ON	Mixed-mode OFF	Fan	Stop	A	A	
205	1011001100	Outdoor unit Operation mode		Permissible stop	Standby	Cooling	Cooling-main	Heating	Heating-main			A	A	
208	0000101100	Outdoor unit control mode		Stop	Thermo OFF	Abnormal stop	Scheduled control	Initial start up	Defrost	Oil balance	Low frequency oil recovery	A	A	
209	1000101100				Refrigerant recovery			Continuous heating 2	Continuous heating 1			A	A	
211	1100101100	Relay output display 1		Comp in operation				72C		OC	Always lit	A	A	
212	0010101100	Relay output display 2	Top	21S4a		CH11		SV1a		SV2		A	A	
			Bottom	SV3		21S4b								
213	1010101100	Relay output display 3	Top					21S4c			Lit while power to the indoor units is being supplied	A	A	
			Bottom											
214	0110101100	Relay output display 4	Top	Optional 200 V output		CH21						A	A	
			Bottom											
216	0001101100	TH4		-99.9 to 999.9								A	A	The unit is [°C]
217	1001101100	TH3		-99.9 to 999.9								A	A	
218	0101101100	TH7		-99.9 to 999.9								A	A	
219	1101101100	TH6		-99.9 to 999.9								A	A	
221	1011101100	TH5		-99.9 to 999.9								A	A	
225	1000011100	TH9		-99.9 to 999.9								A	A	The unit is [°C]
227	1100011100	THHS1		-99.9 to 999.9								A	A	The unit is [°C]
229	1010011100	High-pressure sensor data		-99.9 to 999.9								A	A	The unit is [kgf/cm^2]
230	0110011100	Low-pressure sensor data		-99.9 to 999.9								A	A	
233	0101011100	TH15		-99.9 to 999.9								A	A	The unit is [°C]
234	0101011100	TH11		-99.9 to 999.9								A	A	
235	1101011100	TH16		-99.9 to 999.9								A	A	
236	0011011100	TH17		-99.9 to 999.9								A	A	
237	1011011100	TH18		-99.9 to 999.9								A	A	
238	0111011100	ALh		0: -, 1: Low, 2: Mid, 3: High								A	A	
249	1001111100	∑ Qj		0000 to 9999								B	B	
250	0101111100	∑ Qjc		0000 to 9999								B	B	
251	1101111100	∑ Qjh		0000 to 9999								B	B	
252	0011111100	Target Tc		-99.9 to 999.9								B		The unit is [°C]
253	1011111100	Target Te		-99.9 to 999.9								B		
254	0111111100	Tc		-99.9 to 999.9								A	A	The unit is [°C]
255	1111111100	Te		-99.9 to 999.9								A	A	

*1 A: The condition of either OC or OS is displayed individually. B: The condition of the entire refrigerant system is displayed.

Data before error

No.	SW4 (SW6-9: OFF, SW6-10: OFF)	Item	Display								Unit (A, B) *1		Remarks
	1234567890		LD1	LD2	LD3	LD4	LD5	LD6	LD7	LD8	OC	OS	
257	1000000010	Total frequencies (OC+OS)	0000 to 9999								B		Control data [Hz]
258	0100000010	Total frequency of each unit	0000 to 9999								A	A	
259	1100000010	COMP frequency	0000 to 9999								A	A	
264	0001000010	All AK (OC+OS)	0000 to 9999								B		
265	1001000010	AK	0000 to 9999								A	A	
266	0101000010	FAN1	0000 to 9999								A	A	Fan inverter output [%]
267	1101000010	Fan inverter output rpm (FAN1)	0000 to 9999								A	A	[rpm]
268	0011000010	FAN2	0000 to 9999								A	A	Fan inverter output [%]
269	1011000010	Fan inverter output rpm (FAN2)	0000 to 9999								A	A	[rpm]
272	0000100010	LEV5a	0000 to 9999								A	A	
275	1100100010	LEV2	0000 to 9999								A	A	
276	0010100010	LEV4	0000 to 9999								A	A	
278	0110100010	LEV5b	0000 to 9999								A	A	
279	1110100010	COMP operating current (DC)	00.0 to 999.9								A	A	Peak value[A]
282	0101100010	COMP bus voltage	00.0 to 999.9								A	A	The unit is [V]
283	1101100010	LEV2b	0000 to 9999								A	A	
284	0011100010	LEV2c	0000 to 9999								A	A	
285	1011100010	LEV2d	0000 to 9999								A	A	
286	0111100010	LEV9	0000 to 9999								A	A	
288	0000010010	COMP Operation time Upper 4 digits	0000 to 9999								A	A	The unit is [h]
289	1000010010	COMP Operation time Lower 4 digits	0000 to 9999								A	A	
294	0110010010	COMP number of start-stop events Upper 4 digits	0000 to 9999								A	A	Count-up at start-up The unit is [Time]
295	1110010010	COMP number of start-stop events Lower 4 digits	0000 to 9999								A	A	
300	0011010010	Integrated operation time of compressor (for rotation purpose)	0000 to 9999								B		The unit is [h]
301	1011010010	Power supply unit	OC/OS ↔ Address								B		

*1 A: The condition of either OC or OS is displayed individually. B: The condition of the entire refrigerant system is displayed.

10 LED Status Indicators on the Outdoor Unit Circuit Board

Data on indoor unit system

No.	SW4 (SW6-9: OFF, SW6-10: OFF)	Item	Display								Unit (A, B) *1		Remarks
	1234567890		LD1	LD2	LD3	LD4	LD5	LD6	LD7	LD8	OC	OS	
351	1111101010	IC1 Address/capacity code	0000 to 9999				0000 to 9999				B		Displayed alternately every 5 seconds
352	0000011010	IC2 Address/capacity code	0000 to 9999				0000 to 9999						
353	1000011010	IC3 Address/capacity code	0000 to 9999				0000 to 9999						
354	0100011010	IC4 Address/capacity code	0000 to 9999				0000 to 9999						
355	1100011010	IC5 Address/capacity code	0000 to 9999				0000 to 9999						
356	0010011010	IC6 Address/capacity code	0000 to 9999				0000 to 9999						
357	1010011010	IC7 Address/capacity code	0000 to 9999				0000 to 9999						
358	0110011010	IC8 Address/capacity code	0000 to 9999				0000 to 9999						
359	1110011010	IC9 Address/capacity code	0000 to 9999				0000 to 9999						
360	0001011010	IC10 Address/capacity code	0000 to 9999				0000 to 9999						
361	1001011010	IC11 Address/capacity code	0000 to 9999				0000 to 9999						
362	0101011010	IC12 Address/capacity code	0000 to 9999				0000 to 9999						
363	1101011010	IC13 Address/capacity code	0000 to 9999				0000 to 9999						
364	0011011010	IC14 Address/capacity code	0000 to 9999				0000 to 9999						
365	1011011010	IC15 Address/capacity code	0000 to 9999				0000 to 9999						
366	0111011010	IC16 Address/capacity code	0000 to 9999				0000 to 9999						
367	1111011010	IC17 Address/capacity code	0000 to 9999				0000 to 9999						
368	0000111010	IC18 Address/capacity code	0000 to 9999				0000 to 9999						
369	1000111010	IC19 Address/capacity code	0000 to 9999				0000 to 9999						
370	0100111010	IC20 Address/capacity code	0000 to 9999				0000 to 9999						
371	1100111010	IC21 Address/capacity code	0000 to 9999				0000 to 9999						
372	0010111010	IC22 Address/capacity code	0000 to 9999				0000 to 9999						
373	1010111010	IC23 Address/capacity code	0000 to 9999				0000 to 9999						
374	0110111010	IC24 Address/capacity code	0000 to 9999				0000 to 9999						
375	1110111010	IC25 Address/capacity code	0000 to 9999				0000 to 9999						
376	0001111010	IC26 Address/capacity code	0000 to 9999				0000 to 9999						
377	1001111010	IC27 Address/capacity code	0000 to 9999				0000 to 9999						
378	0101111010	IC28 Address/capacity code	0000 to 9999				0000 to 9999						
379	1101111010	IC29 Address/capacity code	0000 to 9999				0000 to 9999						
380	0011111010	IC30 Address/capacity code	0000 to 9999				0000 to 9999						
381	1011111010	IC31 Address/capacity code	0000 to 9999				0000 to 9999						
382	0111111010	IC32 Address/capacity code	0000 to 9999				0000 to 9999						
383	1111111010	IC33 Address/capacity code	0000 to 9999				0000 to 9999						
384	0000000110	IC34 Address/capacity code	0000 to 9999				0000 to 9999						
385	1000000110	IC35 Address/capacity code	0000 to 9999				0000 to 9999						
386	0100000110	IC36 Address/capacity code	0000 to 9999				0000 to 9999						
387	1100000110	IC37 Address/capacity code	0000 to 9999				0000 to 9999						
388	0010000110	IC38 Address/capacity code	0000 to 9999				0000 to 9999						
389	1010000110	IC39 Address/capacity code	0000 to 9999				0000 to 9999						
390	0110000110	IC40 Address/capacity code	0000 to 9999				0000 to 9999						
391	1110000110	IC41 Address/capacity code	0000 to 9999				0000 to 9999						
392	0001000110	IC42 Address/capacity code	0000 to 9999				0000 to 9999						

*1 A: The condition of either OC or OS is displayed individually. B: The condition of the entire refrigerant system is displayed.

Data on indoor unit system

No.	SW4 (SW6-9: OFF, SW6-10: OFF)	Item	Display								Unit (A, B) *1		Remarks
	1234567890		LD1	LD2	LD3	LD4	LD5	LD6	LD7	LD8	OC	OS	
393	1001000110	IC43 Address/capacity code	0000 to 9999				0000 to 9999				B		Displayed alternately every 5 seconds
394	0101000110	IC44 Address/capacity code	0000 to 9999				0000 to 9999						
395	1101000110	IC45 Address/capacity code	0000 to 9999				0000 to 9999						
396	0011000110	IC46 Address/capacity code	0000 to 9999				0000 to 9999						
397	1011000110	IC47 Address/capacity code	0000 to 9999				0000 to 9999						
398	0111000110	IC48 Address/capacity code	0000 to 9999				0000 to 9999						
399	1111000110	IC49 Address/capacity code	0000 to 9999				0000 to 9999						
400	0000100110	IC50 Address/capacity code	0000 to 9999				0000 to 9999						
408	0001100110	IC1 Suction temperature	-99.9 to 999.9								B		The unit is [°C]
409	1001100110	IC2 Suction temperature	-99.9 to 999.9										
410	0101100110	IC3 Suction temperature	-99.9 to 999.9										
411	1101100110	IC4 Suction temperature	-99.9 to 999.9										
412	0011100110	IC5 Suction temperature	-99.9 to 999.9										
413	1011100110	IC6 Suction temperature	-99.9 to 999.9										
414	0111100110	IC7 Suction temperature	-99.9 to 999.9										
415	1111100110	IC8 Suction temperature	-99.9 to 999.9										
416	0000010110	IC9 Suction temperature	-99.9 to 999.9										
417	1000010110	IC10 Suction temperature	-99.9 to 999.9										
418	0100010110	IC11 Suction temperature	-99.9 to 999.9										
419	1100010110	IC12 Suction temperature	-99.9 to 999.9										
420	0010010110	IC13 Suction temperature	-99.9 to 999.9										
421	1010010110	IC14 Suction temperature	-99.9 to 999.9										
422	0110010110	IC15 Suction temperature	-99.9 to 999.9										
423	1110010110	IC16 Suction temperature	-99.9 to 999.9										
424	0001010110	IC17 Suction temperature	-99.9 to 999.9										
425	1001010110	IC18 Suction temperature	-99.9 to 999.9										
426	0101010110	IC19 Suction temperature	-99.9 to 999.9										
427	1101010110	IC20 Suction temperature	-99.9 to 999.9										
428	0011010110	IC21 Suction temperature	-99.9 to 999.9										
429	1011010110	IC22 Suction temperature	-99.9 to 999.9										
430	0111010110	IC23 Suction temperature	-99.9 to 999.9										
431	1111010110	IC24 Suction temperature	-99.9 to 999.9										
432	0000110110	IC25 Suction temperature	-99.9 to 999.9										
433	1000110110	IC26 Suction temperature	-99.9 to 999.9										
434	0100110110	IC27 Suction temperature	-99.9 to 999.9										
435	1100110110	IC28 Suction temperature	-99.9 to 999.9										
436	0010110110	IC29 Suction temperature	-99.9 to 999.9										
437	1010110110	IC30 Suction temperature	-99.9 to 999.9										
438	0110110110	IC31 Suction temperature	-99.9 to 999.9										
439	1110110110	IC32 Suction temperature	-99.9 to 999.9										
440	0001110110	IC33 Suction temperature	-99.9 to 999.9										
441	1001110110	IC34 Suction temperature	-99.9 to 999.9										
442	0101110110	IC35 Suction temperature	-99.9 to 999.9										

*1 A: The condition of either OC or OS is displayed individually. B: The condition of the entire refrigerant system is displayed.

10 LED Status Indicators on the Outdoor Unit Circuit Board

10 LED Status Indicators on the Outdoor Unit Circuit Board

Data on indoor unit system

No.	SW4 (SW6-9: OFF, SW6-10: OFF)	Item	Display								Unit (A, B) *1		Remarks
	1234567890		LD1	LD2	LD3	LD4	LD5	LD6	LD7	LD8	OC	OS	
443	1101110110	IC36 Suction temperature	-99.9 to 999.9								B		The unit is [°C]
444	0011110110	IC37 Suction temperature	-99.9 to 999.9										
445	1011110110	IC38 Suction temperature	-99.9 to 999.9										
446	0111110110	IC39 Suction temperature	-99.9 to 999.9										
447	1111110110	IC40 Suction temperature	-99.9 to 999.9										
448	0000001110	IC41 Suction temperature	-99.9 to 999.9										
449	1000001110	IC42 Suction temperature	-99.9 to 999.9										
450	0100001110	IC43 Suction temperature	-99.9 to 999.9										
451	1100001110	IC44 Suction temperature	-99.9 to 999.9										
452	0010001110	IC45 Suction temperature	-99.9 to 999.9										
453	1010001110	IC46 Suction temperature	-99.9 to 999.9										
454	0110001110	IC47 Suction temperature	-99.9 to 999.9										
455	1110001110	IC48 Suction temperature	-99.9 to 999.9										
456	0001001110	IC49Suction temperature	-99.9 to 999.9										
457	1001001110	IC50 Suction temperature	-99.9 to 999.9										
458	0101001110	IC1 Liquid pipe temperature	-99.9 to 999.9								B		The unit is [°C]
459	1101001110	IC2 Liquid pipe temperature	-99.9 to 999.9										
460	0011001110	IC3 Liquid pipe temperature	-99.9 to 999.9										
461	1011001110	IC4 Liquid pipe temperature	-99.9 to 999.9										
462	0111001110	IC5 Liquid pipe temperature	-99.9 to 999.9										
463	1111001110	IC6 Liquid pipe temperature	-99.9 to 999.9										
464	0000101110	IC7 Liquid pipe temperature	-99.9 to 999.9										
465	1000101110	IC8 Liquid pipe temperature	-99.9 to 999.9										
466	0100101110	IC9 Liquid pipe temperature	-99.9 to 999.9										
467	1100101110	IC10 Liquid pipe temperature	-99.9 to 999.9										
468	0010101110	IC11 Liquid pipe temperature	-99.9 to 999.9										
469	1010101110	IC12 Liquid pipe temperature	-99.9 to 999.9										
470	0110101110	IC13 Liquid pipe temperature	-99.9 to 999.9										
471	1110101110	IC14 Liquid pipe temperature	-99.9 to 999.9										
472	0001101110	IC15 Liquid pipe temperature	-99.9 to 999.9										
473	1001101110	IC16 Liquid pipe temperature	-99.9 to 999.9										
474	0101101110	IC17 Liquid pipe temperature	-99.9 to 999.9										
475	1101101110	IC18 Liquid pipe temperature	-99.9 to 999.9										
476	0011101110	IC19 Liquid pipe temperature	-99.9 to 999.9										
477	1011101110	IC20 Liquid pipe temperature	-99.9 to 999.9										
478	0111101110	IC21 Liquid pipe temperature	-99.9 to 999.9										
479	1111101110	IC22 Liquid pipe temperature	-99.9 to 999.9										
480	0000011110	IC23 Liquid pipe temperature	-99.9 to 999.9										
481	1000011110	IC24 Liquid pipe temperature	-99.9 to 999.9										
482	0100011110	IC25 Liquid pipe temperature	-99.9 to 999.9										
483	1100011110	IC26 Liquid pipe temperature	-99.9 to 999.9										
484	0010011110	IC27 Liquid pipe temperature	-99.9 to 999.9										
485	1010011110	IC28 Liquid pipe temperature	-99.9 to 999.9										

*1 A: The condition of either OC or OS is displayed individually. B: The condition of the entire refrigerant system is displayed.

Data on indoor unit system

No.	SW4 (SW6-9: OFF, SW6-10: OFF)	Item	Display								Unit (A, B) *1		Remarks
	1234567890		LD1	LD2	LD3	LD4	LD5	LD6	LD7	LD8	OC	OS	
486	0110011110	IC29 Liquid pipe temperature	-99.9 to 999.9								B		The unit is [°C]
487	1110011110	IC30 Liquid pipe temperature	-99.9 to 999.9										
488	0001011110	IC31 Liquid pipe temperature	-99.9 to 999.9										
489	1001011110	IC32 Liquid pipe temperature	-99.9 to 999.9										
490	0101011110	IC33 Liquid pipe temperature	-99.9 to 999.9										
491	1101011110	IC34 Liquid pipe temperature	-99.9 to 999.9										
492	0011011110	IC35 Liquid pipe temperature	-99.9 to 999.9										
493	1011011110	IC36 Liquid pipe temperature	-99.9 to 999.9										
494	0111011110	IC37 Liquid pipe temperature	-99.9 to 999.9										
495	1111011110	IC38 Liquid pipe temperature	-99.9 to 999.9										
496	0000111110	IC39 Liquid pipe temperature	-99.9 to 999.9										
497	1000111110	IC40 Liquid pipe temperature	-99.9 to 999.9										
498	0100111110	IC41 Liquid pipe temperature	-99.9 to 999.9										
499	1100111110	IC42 Liquid pipe temperature	-99.9 to 999.9										
500	0010111110	IC43 Liquid pipe temperature	-99.9 to 999.9										
501	1010111110	IC44 Liquid pipe temperature	-99.9 to 999.9										
502	0110111110	IC45 Liquid pipe temperature	-99.9 to 999.9										
503	1110111110	IC46 Liquid pipe temperature	-99.9 to 999.9										
504	0001111110	IC47 Liquid pipe temperature	-99.9 to 999.9										
505	1001111110	IC48 Liquid pipe temperature	-99.9 to 999.9										
506	0101111110	IC49 Liquid pipe temperature	-99.9 to 999.9										
507	1101111110	IC50 Liquid pipe temperature	-99.9 to 999.9										

*1 A: The condition of either OC or OS is displayed individually. B: The condition of the entire refrigerant system is displayed.

10 LED Status Indicators on the Outdoor Unit Circuit Board

Setting data

No.	SW4 (SW6-9: OFF, SW6-10: OFF)	Item	Display								Unit (A, B)*1		Remarks
	1234567890		LD1	LD2	LD3	LD4	LD5	LD6	LD7	LD8	OC	OS	
512	0000000001	Self-address	Alternate display of self address and unit model								A	A	
513	1000000001	IC/FU address	Count-up display of number of connected units								B		
514	0100000001	RC address	Count-up display of number of connected units								B		
515	1100000001	BC/BS/TU address	Count-up display of number of connected units										
516	0010000001	OS address	Count-up display of number of connected units								B		
517	1010000001	Version/Capacity	S/W version → Refrigerant type → Model and capacity → Communication address								A	A	
518	0110000001	OC address	OC address display									B	

*1 A: The condition of either OC or OS is displayed individually. B: The condition of the entire refrigerant system is displayed.

Data on indoor unit system

No.	SW4 (SW6-9: OFF, SW6-10: OFF)	Item	Display								Unit (A, B) *1		Remarks
	1234567890		LD1	LD2	LD3	LD4	LD5	LD6	LD7	LD8	OC	OS	
523	1101000001	IC1 Gas pipe temperature	-99.9 to 999.9								B		The unit is [°C]
524	0011000001	IC2 Gas pipe temperature	-99.9 to 999.9										
525	1011000001	IC3 Gas pipe temperature	-99.9 to 999.9										
526	0111000001	IC4 Gas pipe temperature	-99.9 to 999.9										
527	1111000001	IC5 Gas pipe temperature	-99.9 to 999.9										
528	0000100001	IC6 Gas pipe temperature	-99.9 to 999.9										
529	1000100001	IC7 Gas pipe temperature	-99.9 to 999.9										
530	0100100001	IC8 Gas pipe temperature	-99.9 to 999.9										
531	1100100001	IC9 Gas pipe temperature	-99.9 to 999.9										
532	0010100001	IC10 Gas pipe temperature	-99.9 to 999.9										
533	1010100001	IC11 Gas pipe temperature	-99.9 to 999.9										
534	0110100001	IC12 Gas pipe temperature	-99.9 to 999.9										
535	1110100001	IC13 Gas pipe temperature	-99.9 to 999.9										
536	0001100001	IC14 Gas pipe temperature	-99.9 to 999.9										
537	1001100001	IC15 Gas pipe temperature	-99.9 to 999.9										
538	0101100001	IC16 Gas pipe temperature	-99.9 to 999.9										
539	1101100001	IC17 Gas pipe temperature	-99.9 to 999.9										
540	0011100001	IC18 Gas pipe temperature	-99.9 to 999.9										
541	1011100001	IC19 Gas pipe temperature	-99.9 to 999.9										
542	0111100001	IC20 Gas pipe temperature	-99.9 to 999.9										
543	1111100001	IC21 Gas pipe temperature	-99.9 to 999.9										
544	0000010001	IC22 Gas pipe temperature	-99.9 to 999.9										
545	1000010001	IC23 Gas pipe temperature	-99.9 to 999.9										
546	0100010001	IC24 Gas pipe temperature	-99.9 to 999.9										
547	1100010001	IC25 Gas pipe temperature	-99.9 to 999.9										
548	0010010001	IC26 Gas pipe temperature	-99.9 to 999.9										
549	1010010001	IC27 Gas pipe temperature	-99.9 to 999.9										
550	0110010001	IC28Gas pipe temperature	-99.9 to 999.9										
551	1110010001	IC29 Gas pipe temperature	-99.9 to 999.9										
552	0001010001	IC30 Gas pipe temperature	-99.9 to 999.9										
553	1001010001	IC31 Gas pipe temperature	-99.9 to 999.9										
554	0101010001	IC32 Gas pipe temperature	-99.9 to 999.9										
555	1101010001	IC33 Gas pipe temperature	-99.9 to 999.9										
556	0011010001	IC34 Gas pipe temperature	-99.9 to 999.9										
557	1011010001	IC35 Gas pipe temperature	-99.9 to 999.9										
558	0111010001	IC36 Gas pipe temperature	-99.9 to 999.9										
559	1111010001	IC37 Gas pipe temperature	-99.9 to 999.9										
560	0000110001	IC38 Gas pipe temperature	-99.9 to 999.9										
561	1000110001	IC39 Gas pipe temperature	-99.9 to 999.9										
562	0100110001	IC40 Gas pipe temperature	-99.9 to 999.9										
563	1100110001	IC41 Gas pipe temperature	-99.9 to 999.9										
564	0010110001	IC42 Gas pipe temperature	-99.9 to 999.9										

*1 A: The condition of either OC or OS is displayed individually. B: The condition of the entire refrigerant system is displayed.

10 LED Status Indicators on the Outdoor Unit Circuit Board

10 LED Status Indicators on the Outdoor Unit Circuit Board

Data on indoor unit system

No.	SW4 (SW6-9: OFF, SW6-10: OFF)	Item	Display								Unit (A, B) *1		Remarks
	1234567890		LD1	LD2	LD3	LD4	LD5	LD6	LD7	LD8	OC	OS	
565	1010110001	IC43 Gas pipe temperature	-99.9 to 999.9								B		The unit is [°C]
566	0110110001	IC44 Gas pipe temperature	-99.9 to 999.9										
567	1110110001	IC45 Gas pipe temperature	-99.9 to 999.9										
568	0001110001	IC46 Gas pipe temperature	-99.9 to 999.9										
569	1001110001	IC47 Gas pipe temperature	-99.9 to 999.9										
570	0101110001	IC48 Gas pipe temperature	-99.9 to 999.9										
571	1101110001	IC49 Gas pipe temperature	-99.9 to 999.9										
572	0011110001	IC50 Gas pipe temperature	-99.9 to 999.9										
573	1011110001	IC1SH	-99.9 to 999.9								B		The unit is [°C]
574	0111110001	IC2SH	-99.9 to 999.9										
575	1111110001	IC3SH	-99.9 to 999.9										
576	0000001001	IC4SH	-99.9 to 999.9										
577	1000001001	IC5SH	-99.9 to 999.9										
578	0100001001	IC6SH	-99.9 to 999.9										
579	1100001001	IC7SH	-99.9 to 999.9										
580	0010001001	IC8SH	-99.9 to 999.9										
581	1010001001	IC9SH	-99.9 to 999.9										
582	0110001001	IC10SH	-99.9 to 999.9										
583	1110001001	IC11SH	-99.9 to 999.9										
584	0001001001	IC12SH	-99.9 to 999.9										
585	1001001001	IC13SH	-99.9 to 999.9										
586	0101001001	IC14SH	-99.9 to 999.9										
587	1101001001	IC15SH	-99.9 to 999.9										
588	0011001001	IC16SH	-99.9 to 999.9										
589	1011001001	IC17SH	-99.9 to 999.9										
590	0111001001	IC18SH	-99.9 to 999.9										
591	1111001001	IC19SH	-99.9 to 999.9										
592	0000101001	IC20SH	-99.9 to 999.9										
593	1000101001	IC21SH	-99.9 to 999.9										
594	0100101001	IC22SH	-99.9 to 999.9										
595	1100101001	IC23SH	-99.9 to 999.9										
596	0010101001	IC24SH	-99.9 to 999.9										
597	1010101001	IC25SH	-99.9 to 999.9										
598	0110101001	IC26SH	-99.9 to 999.9										
599	1110101001	IC27SH	-99.9 to 999.9										
600	0001101001	IC28SH	-99.9 to 999.9										
601	1001101001	IC29SH	-99.9 to 999.9										
602	0101101001	IC30SH	-99.9 to 999.9										
603	1101101001	IC31SH	-99.9 to 999.9										
604	0011101001	IC32SH	-99.9 to 999.9										
605	1011101001	IC33SH	-99.9 to 999.9										
606	0111101001	IC34SH	-99.9 to 999.9										
607	1111101001	IC35SH	-99.9 to 999.9										

*1 A: The condition of either OC or OS is displayed individually. B: The condition of the entire refrigerant system is displayed.

Data on indoor unit system

No.	SW4 (SW6-9: OFF, SW6-10: OFF)	Item	Display								Unit (A, B) *1		Remarks
	1234567890		LD1	LD2	LD3	LD4	LD5	LD6	LD7	LD8	OC	OS	
608	0000011001	IC36SH	-99.9 to 999.9								B		The unit is [°C]
609	1000011001	IC37SH	-99.9 to 999.9										
610	0100011001	IC38SH	-99.9 to 999.9										
611	1100011001	IC39SH	-99.9 to 999.9										
612	0010011001	IC40SH	-99.9 to 999.9										
613	1010011001	IC41SH	-99.9 to 999.9										
614	0110011001	IC42SH	-99.9 to 999.9										
615	1110011001	IC43SH	-99.9 to 999.9										
616	0001011001	IC44SH	-99.9 to 999.9										
617	1001011001	IC45SH	-99.9 to 999.9										
618	0101011001	IC46SH	-99.9 to 999.9										
619	1101011001	IC47SH	-99.9 to 999.9										
620	0011011001	IC48SH	-99.9 to 999.9										
621	1011011001	IC49SH	-99.9 to 999.9										
622	0111011001	IC50SH	-99.9 to 999.9										
623	1111011001	IC1SC	-99.9 to 999.9								B		The unit is [°C]
624	0000111001	IC2SC	-99.9 to 999.9										
625	1000111001	IC3SC	-99.9 to 999.9										
626	0100111001	IC4SC	-99.9 to 999.9										
627	1100111001	IC5SC	-99.9 to 999.9										
628	0010111001	IC6SC	-99.9 to 999.9										
629	1010111001	IC7SC	-99.9 to 999.9										
630	0110111001	IC8SC	-99.9 to 999.9										
631	1110111001	IC9SC	-99.9 to 999.9										
632	0001111001	IC10SC	-99.9 to 999.9										
633	1001111001	IC11SC	-99.9 to 999.9										
634	0101111001	IC12SC	-99.9 to 999.9										
635	1101111001	IC13SC	-99.9 to 999.9										
636	0011111001	IC14SC	-99.9 to 999.9										
637	1011111001	IC15SC	-99.9 to 999.9										
638	0111111001	IC16SC	-99.9 to 999.9										
639	1111111001	IC17SC	-99.9 to 999.9										
640	0000000101	IC18SC	-99.9 to 999.9										
641	1000000101	IC19SC	-99.9 to 999.9										
642	0100000101	IC20SC	-99.9 to 999.9										
643	1100000101	IC21SC	-99.9 to 999.9										
644	0010000101	IC22SC	-99.9 to 999.9										
645	1010000101	IC23SC	-99.9 to 999.9										
646	0110000101	IC24SC	-99.9 to 999.9										
647	1110000101	IC25SC	-99.9 to 999.9										
648	0001000101	IC26SC	-99.9 to 999.9										
649	1001000101	IC27SC	-99.9 to 999.9										
650	0101000101	IC28SC	-99.9 to 999.9										

*1 A: The condition of either OC or OS is displayed individually. B: The condition of the entire refrigerant system is displayed.

10 LED Status Indicators on the Outdoor Unit Circuit Board

10 LED Status Indicators on the Outdoor Unit Circuit Board

Data on indoor unit system

No.	SW4 (SW6-9: OFF, SW6-10: OFF)	Item	Display								Unit (A, B) *1		Remarks
	1234567890		LD1	LD2	LD3	LD4	LD5	LD6	LD7	LD8	OC	OS	
651	1101000101	IC29SC	-99.9 to 999.9								B		The unit is [°C]
652	0011000101	IC30SC	-99.9 to 999.9										
653	1011000101	IC31SC	-99.9 to 999.9										
654	0111000101	IC32SC	-99.9 to 999.9										
655	1111000101	IC33SC	-99.9 to 999.9										
656	0000100101	IC34SC	-99.9 to 999.9										
657	1000100101	IC35SC	-99.9 to 999.9										
658	0100100101	IC36SC	-99.9 to 999.9										
659	1100100101	IC37SC	-99.9 to 999.9										
660	0010100101	IC38SC	-99.9 to 999.9										
661	1010100101	IC39SC	-99.9 to 999.9										
662	0110100101	IC40SC	-99.9 to 999.9										
663	1110100101	IC41SC	-99.9 to 999.9										
664	0001100101	IC42SC	-99.9 to 999.9										
665	1001100101	IC43SC	-99.9 to 999.9										
666	0101100101	IC44SC	-99.9 to 999.9										
667	1101100101	IC45SC	-99.9 to 999.9										
668	0011100101	IC46SC	-99.9 to 999.9										
669	1011100101	IC47SC	-99.9 to 999.9										
670	0111100101	IC48SC	-99.9 to 999.9										
671	1111100101	IC49SC	-99.9 to 999.9										
672	0000010101	IC50SC	-99.9 to 999.9										

*1 A: The condition of either OC or OS is displayed individually. B: The condition of the entire refrigerant system is displayed.

Setting data

No.	SW4 (SW6-9: OFF, SW6-10: OFF)	Item	Display								Unit (A, B)*1		Remarks
	1234567890		LD1	LD2	LD3	LD4	LD5	LD6	LD7	LD8	OC	OS	
676	0010010101	INV board S/W version	0.00 to 99.99								A	A	
679	1110010101	Fan board (address 5) S/W version	0.00 to 99.99								A	A	
680	0001010101	Fan board (address 6) S/W version	0.00 to 99.99								A	A	
688	0000110101	Current time	00:00 to 23:59								A	A	Hour: minute
689	1000110101	Current time -2	00.00 to 99.12/1 to 31										Year and month, and date alternate display
690	0100110101	Time of error detection 1	00:00 to 23:59										Hour: minute
691	1100110101	Time of error detection 1-2	00.00 to 99.12/1 to 31										Year and month, and date alternate display
692	0010110101	Time of error detection 2	00:00 to 23:59										Hour: minute
693	1010110101	Time of error detection 2-2	00.00 to 99.12/1 to 31										Year and month, and date alternate display
694	0110110101	Time of error detection 3	00:00 to 23:59										Hour: minute
695	1110110101	Time of error detection 3-2	00.00 to 99.12/1 to 31										Year and month, and date alternate display
696	0001110101	Time of error detection 4	00:00 to 23:59										Hour: minute
697	1001110101	Time of error detection 4-2	00.00 to 99.12/1 to 31										Year and month, and date alternate display
698	0101110101	Time of error detection 5	00:00 to 23:59										Hour: minute
699	1101110101	Time of error detection 5-2	00.00 to 99.12/1 to 31										Year and month, and date alternate display
700	0011110101	Time of error detection 6	00:00 to 23:59										Hour: minute
701	1011110101	Time of error detection 6-2	00.00 to 99.12/1 to 31										Year and month, and date alternate display
702	0111110101	Time of error detection 7	00:00 to 23:59								A	A	Hour: minute
703	1111110101	Time of error detection 7-2	00.00 to 99.12/1 to 31										Year and month, and date alternate display
704	0000001101	Time of error detection 8	00:00 to 23:59										Hour: minute
705	1000001101	Time of error detection 8-2	00.00 to 99.12/1 to 31										Year and month, and date alternate display
706	0100001101	Time of error detection 9	00:00 to 23:59										Hour: minute
707	1100001101	Time of error detection 9-2	00.00 to 99.12/1 to 31										Year and month, and date alternate display
708	0010001101	Time of error detection 10	00:00 to 23:59										Hour: minute
709	1010001101	Time of error detection 10-2	00.00 to 99.12/1 to 31										Year and month, and date alternate display
710	0110001101	Time of last data backup before error	00:00 to 23:59										Hour: minute
711	1110001101	Time of last data backup before error -2	00.00 to 99.12/1 to 31										Year and month, and date alternate display

*1 A: The condition of either OC or OS is displayed individually. B: The condition of the entire refrigerant system is displayed.

10 LED Status Indicators on the Outdoor Unit Circuit Board

Data on indoor unit system

No.	SW4 (SW6-9: OFF, SW6-10: OFF)	Item	Display								Unit (A, B)* 1		Remarks
	1234567890		LD1	LD2	LD3	LD4	LD5	LD6	LD7	LD8	OC	OS	
714	0101001101	IC1 LEV opening	0000 to 9999								B		Fully open: 2000
715	1101001101	IC2 LEV opening	0000 to 9999										
716	0011001101	IC3 LEV opening	0000 to 9999										
717	1011001101	IC4 LEV opening	0000 to 9999										
718	0111001101	IC5 LEV opening	0000 to 9999										
719	1111001101	IC6 LEV opening	0000 to 9999										
720	0000101101	IC7 LEV opening	0000 to 9999										
721	1000101101	IC8 LEV opening	0000 to 9999										
722	0100101101	IC9 LEV opening	0000 to 9999										
723	1100101101	IC10 LEV opening	0000 to 9999										
724	0010101101	IC11 LEV opening	0000 to 9999										
725	1010101101	IC12 LEV opening	0000 to 9999										
726	0110101101	IC13 LEV opening	0000 to 9999										
727	1110101101	IC14 LEV opening	0000 to 9999										
728	0001101101	IC15 LEV opening	0000 to 9999										
729	1001101101	IC16 LEV opening	0000 to 9999										
730	0101101101	IC17 LEV opening	0000 to 9999										
731	1101101101	IC18 LEV opening	0000 to 9999										
732	0011101101	IC19 LEV opening	0000 to 9999										
733	1011101101	IC20 LEV opening	0000 to 9999										
734	0111101101	IC21 LEV opening	0000 to 9999										
735	1111101101	IC22 LEV opening	0000 to 9999										
736	0000011101	IC23 LEV opening	0000 to 9999										
737	1000011101	IC24 LEV opening	0000 to 9999										
738	0100011101	IC25 LEV opening	0000 to 9999										
739	1100011101	IC26 LEV opening	0000 to 9999										
740	0010011101	IC27 LEV opening	0000 to 9999										
741	1010011101	IC28 LEV opening	0000 to 9999										
742	0110011101	IC29 LEV opening	0000 to 9999										
743	1110011101	IC30 LEV opening	0000 to 9999										
744	0001011101	IC31 LEV opening	0000 to 9999										
745	1001011101	IC32 LEV opening	0000 to 9999										
746	0101011101	IC33 LEV opening	0000 to 9999										
747	1101011101	IC34 LEV opening	0000 to 9999										
748	0011011101	IC35 LEV opening	0000 to 9999										
749	1011011101	IC36 LEV opening	0000 to 9999										
750	0111011101	IC37 LEV opening	0000 to 9999										
751	1111011101	IC38 LEV opening	0000 to 9999										
752	0000111101	IC39 LEV opening	0000 to 9999										
753	1000111101	IC40 LEV opening	0000 to 9999										
754	0100111101	IC41 LEV opening	0000 to 9999										
755	1100111101	IC42 LEV opening	0000 to 9999										

*1 A: The condition of either OC or OS is displayed individually. B: The condition of the entire refrigerant system is displayed.

Data on indoor unit system

No.	SW4 (SW6-9: OFF, SW6-10: OFF)	Item	Display								Unit (A, B)*1		Remarks
	1234567890		LD1	LD2	LD3	LD4	LD5	LD6	LD7	LD8	OC	OS	
756	0010111101	IC43 LEV opening	0000 to 9999								B		Fully open: 2000
757	1010111101	IC44 LEV opening	0000 to 9999										
758	0110111101	IC45 LEV opening	0000 to 9999										
759	1110111101	IC46 LEV opening	0000 to 9999										
760	0001111101	IC47 LEV opening	0000 to 9999										
761	1001111101	IC48 LEV opening	0000 to 9999										
762	0101111101	IC49 LEV opening	0000 to 9999										
763	1101111101	IC50 LEV opening	0000 to 9999										
764	0011111101	IC1 Operation mode	0000: Stop 0001: Ventilation 0002: Cooling 0003: Heating 0004: Dry								B		
765	1011111101	IC2 Operation mode											
766	0111111101	IC3 Operation mode											
767	1111111101	IC4 Operation mode											
768	0000000011	IC5 Operation mode											
769	1000000011	IC6 Operation mode											
770	0100000011	IC7 Operation mode											
771	1100000011	IC8 Operation mode											
772	0010000011	IC9 Operation mode											
773	1010000011	IC10 Operation mode											
774	0110000011	IC11 Operation mode											
775	1110000011	IC12 Operation mode											
776	0001000011	IC13 Operation mode											
777	1001000011	IC14 Operation mode											
778	0101000011	IC15 Operation mode											
779	1101000011	IC16 Operation mode											
780	0011000011	IC17 Operation mode											
781	1011000011	IC18 Operation mode											
782	0111000011	IC19 Operation mode											
783	1111000011	IC20 Operation mode											
784	0000100011	IC21 Operation mode											
785	1000100011	IC22 Operation mode											
786	0100100011	IC23 Operation mode											
787	1100100011	IC24 Operation mode											
788	0010100011	IC25 Operation mode											
789	1010100011	IC26 Operation mode											
790	0110100011	IC27 Operation mode											
791	1110100011	IC28 Operation mode											
792	0001100011	IC29 Operation mode											
793	1001100011	IC30 Operation mode											
794	0101100011	IC31 Operation mode											
795	1101100011	IC32 Operation mode											
796	0011100011	IC33 Operation mode											

*1 A: The condition of either OC or OS is displayed individually. B: The condition of the entire refrigerant system is displayed.

10 LED Status Indicators on the Outdoor Unit Circuit Board

10 LED Status Indicators on the Outdoor Unit Circuit Board

Data on indoor unit system

No.	SW4 (SW6-9: OFF, SW6-10: OFF)	Item	Display								Unit (A, B)*1		Remarks
	1234567890		LD1	LD2	LD3	LD4	LD5	LD6	LD7	LD8	OC	OS	
797	1011100011	IC34 Operation mode	0000: Stop 0001: Ventilation 0002: Cooling 0003: Heating 0004: Dry								B		
798	0111100011	IC35 Operation mode											
799	1111100011	IC36 Operation mode											
800	0000010011	IC37 Operation mode											
801	1000010011	IC38 Operation mode											
802	0100010011	IC39 Operation mode											
803	1100010011	IC40 Operation mode											
804	0010010011	IC41 Operation mode											
805	1010010011	IC42 Operation mode											
806	0110010011	IC43 Operation mode											
807	1110010011	IC44 Operation mode											
808	0001010011	IC45 Operation mode											
809	1001010011	IC46 Operation mode											
810	0101010011	IC47 Operation mode											
811	1101010011	IC48 Operation mode											
812	0011010011	IC49 Operation mode											
813	1011010011	IC50 Operation mode											
814	0111010011	IC1 filter	0000 to 9999								B		Hours since last maintenance [h]
815	1111010011	IC2 filter	0000 to 9999										
816	0000110011	IC3 filter	0000 to 9999										
817	1000110011	IC4 filter	0000 to 9999										
818	0100110011	IC5 filter	0000 to 9999										
819	1100110011	IC6 filter	0000 to 9999										
820	0010110011	IC7 filter	0000 to 9999										
821	1010110011	IC8 filter	0000 to 9999										
822	0110110011	IC9 filter	0000 to 9999										
823	1110110011	IC10 filter	0000 to 9999										
824	0001110011	IC11 filter	0000 to 9999										
825	1001110011	IC12 filter	0000 to 9999										
826	0101110011	IC13 filter	0000 to 9999										
827	1101110011	IC14 filter	0000 to 9999										
828	0011110011	IC15 filter	0000 to 9999										
829	1011110011	IC16 filter	0000 to 9999										
830	0111110011	IC17 filter	0000 to 9999										
831	1111110011	IC18 filter	0000 to 9999										
832	0000001011	IC19 filter	0000 to 9999										
833	1000001011	IC20 filter	0000 to 9999										
834	0100001011	IC21 filter	0000 to 9999										
835	1100001011	IC22 filter	0000 to 9999										
836	0010001011	IC23 filter	0000 to 9999										
837	1010001011	IC24 filter	0000 to 9999										
838	0110001011	IC25 filter	0000 to 9999										
839	1110001011	IC26 filter	0000 to 9999										

*1 A: The condition of either OC or OS is displayed individually. B: The condition of the entire refrigerant system is displayed.

Data on indoor unit system

No.	SW4 (SW6-9: OFF, SW6-10: OFF)	Item	Display								Unit (A, B)*1		Remarks
	1234567890		LD1	LD2	LD3	LD4	LD5	LD6	LD7	LD8	OC	OS	
840	0001001011	IC27 filter	0000 to 9999								B		Hours since last maintenance [h]
841	1001001011	IC28 filter	0000 to 9999										
842	0101001011	IC29 filter	0000 to 9999										
843	1101001011	IC30 filter	0000 to 9999										
844	0011001011	IC31 filter	0000 to 9999										
845	1011001011	IC32 filter	0000 to 9999										
846	0111001001	IC33 filter	0000 to 9999										
847	1111001011	IC34 filter	0000 to 9999										
848	0000101011	IC35 filter	0000 to 9999										
849	1000101011	IC36 filter	0000 to 9999										
850	0100101011	IC37 filter	0000 to 9999										
851	1100101011	IC38 filter	0000 to 9999										
852	0010101011	IC39 filter	0000 to 9999										
853	1010101011	IC40 filter	0000 to 9999										
854	0110101011	IC41 filter	0000 to 9999										
855	1110101011	IC42 filter	0000 to 9999										
856	0001101011	IC43 filter	0000 to 9999										
857	1001101011	IC44 filter	0000 to 9999										
858	0101101011	IC45 filter	0000 to 9999										
859	1101101011	IC46 filter	0000 to 9999										
860	0011101011	IC47 filter	0000 to 9999										
861	1011101011	IC48 filter	0000 to 9999										
862	0111101011	IC49 filter	0000 to 9999										
863	1111101011	IC50 filter	0000 to 9999										

*1 A: The condition of either OC or OS is displayed individually. B: The condition of the entire refrigerant system is displayed.

10 LED Status Indicators on the Outdoor Unit Circuit Board

10 LED Status Indicators on the Outdoor Unit Circuit Board

Other types of data

No.	SW4 (SW6-9: OFF, SW6-10: OFF)	Item	Display								Unit (A, B) *1		Remarks
	1234567890		LD1	LD2	LD3	LD4	LD5	LD6	LD7	LD8	OC	OS	
871	1110011011	U-phase current effective value 1	-99.9 to 999.9								A	A	The unit is [A]
872	0001011011	W-phase current effective value 1	-99.9 to 999.9								A	A	
873	1001011011	Power factor phase angle 1	-99.9 to 999.9								A	A	The unit is [deg]
880	0000111011	Control board Reset counter	0 to 254								A	A	The unit is [time]
881	1000111011	INV board Reset counter	0 to 254								A	A	
884	0010111011	Fan board (address 5) reset counter	0 to 254								A	A	The unit is [time]
885	1010111011	Fan board (address 6) reset counter	0 to 254								A	A	
980	0010101111	M-NET processor S/W version	0.00 to 99.99								A	A	

*1 A: The condition of either OC or OS is displayed individually. B: The condition of the entire refrigerant system is displayed.

Current data

No.	SW4 (SW6-9:ON, SW6-10:OFF)	Item	Display								Unit (A, B)*1		Remarks
	1234567890		LD1	LD2	LD3	LD4	LD5	LD6	LD7	LD8	OC	OS	
1024	0000000000												
1025	1000000000												
1026	0100000000												
1027	1100000000												
1028	0010000000												
1029	1010000000												
1030	0110000000												
1031	1110000000												
1032	0001000000												
1033	1001000000												
1034	0101000000												
1035	1101000000												
1036	0011000000												
1037	1011000000												
1038	0111000000												
1039	1111000000												
1040	0000100000												
1041	1000100000												
1042	0100100000												
1043	1100100000												
1044	0010100000												
1045	1010100000												
1046	0110100000												
1047	1110100000												
1048	0001100000												
1049	1001100000												
1050	0101100000												
1051	1101100000												
1052	0011100000												
1053	1011100000												
1054	0111100000												
1055	1111100000												
1056	0000010000												
1057	1000010000												
1058	0100010000												
1059	1100010000												
1060	0010010000												
1061	1010010000												
1062	0110010000												
1063	1110010000												
1064	0001010000												
1065	1001010000												

*1 A: The condition of either OC or OS is displayed individually. B: The condition of the entire refrigerant system is displayed.

10 LED Status Indicators on the Outdoor Unit Circuit Board

Current data

No.	SW4 (SW6-9:ON, SW6-10:OFF)	Item	Display								Unit (A, B)*1		Remarks
	1234567890		LD1	LD2	LD3	LD4	LD5	LD6	LD7	LD8	OC	OS	
1066	0101010000												
1067	1101010000												
1068	0011010000												
1069	1011010000												
1070	0111010000												
1071	1111010000												
1072	0000110000												
1073	1000110000												
1074	0100110000												
1075	1100110000												
1076	0010110000												
1077	1010110000												
1078	0110110000												
1079	1110110000												
1080	0001110000												
1081	1001110000												
1082	0101110000												
1083	1101110000												
1084	0011110000												
1085	1011110000												
1086	0111110000												
1087	1111110000												
1088	0000001000												
1089	1000001000												
1090	0100001000												
1091	1100001000												
1092	0010001000												
1093	1010001000												
1094	0110001000												
1095	1110001000												
1096	0001001000												
1097	1001001000												
1098	0101001000												
1099	1101001000												
1100	0011001000												
1101	1011001000												
1102	0111001000												
1103	1111001000												
1104	0000101000												
1105	1000101000												
1106	0100101000												
1107	1100101000												
1108	0010101000												

*1 A: The condition of either OC or OS is displayed individually. B: The condition of the entire refrigerant system is displayed.

Current data

No.	SW4 (SW6-9:ON, SW6-10:OFF)	Item	Display								Unit (A, B)*1		Remarks
	1234567890		LD1	LD2	LD3	LD4	LD5	LD6	LD7	LD8	OC	OS	
1109	1010101000												
1110	0110101000												
1111	1110101000												
1112	0001101000												
1113	1001101000												
1114	0101101000												
1115	1101101000												
1116	0011101000												
1117	1011101000												
1118	0111101000												
1119	1111101000												
1120	0000011000												
1121	1000011000												
1122	0100011000												
1123	1100011000												
1124	0010011000												
1125	1010011000												
1126	0110011000												
1127	1110011000												
1128	0001011000												
1129	1001011000												
1130	0101011000												
1131	1101011000												
1132	0011011000												
1133	1011011000												
1134	0111011000												
1135	1111011000												
1136	0000111000												
1137	1000111000												
1138	0100111000												
1139	1100111000												
1140	0010111000												
1141	1010111000												
1142	0110111000												
1143	1110111000												
1144	0001111000												
1145	1001111000												
1146	0101111000												
1147	1101111000												
1148	0011111000												
1149	1011111000												
1150	0111111000												
1151	1111111000												

*1 A: The condition of either OC or OS is displayed individually. B: The condition of the entire refrigerant system is displayed.

10 LED Status Indicators on the Outdoor Unit Circuit Board

10 LED Status Indicators on the Outdoor Unit Circuit Board

Current data

No.	SW4 (SW6-9:ON, SW6-10:OFF)	Item	Display								Unit (A, B)*1		Remarks
	1234567890		LD1	LD2	LD3	LD4	LD5	LD6	LD7	LD8	OC	OS	
1152	0000000100	Relay output display BC (Main)	SVM1	SVM2	SVM1b	SVM2b	21S4a				B		The 21S4a value will be displayed only when a WCB is connected to the system.
1153	1000000100		SVA1	SVB1	SVC1	SVA2	SVB2	SVC2			B		
			SVA3	SVB3	SVC3	SVA4	SVB4	SVC4					
1154	0100000100		SVA5	SVB5	SVC5	SVA6	SVB6	SVC6			B		
			SVA7	SVB7	SVC7	SVA8	SVB8	SVC8					
1155	1100000100		SVA9	SVB9	SVC9	SVA10	SVB10	SVC10			B		
			SVA11	SVB11	SVC11	SVA12	SVB12	SVC12					
1156	0010000100		SVA13	SVB13	SVC13	SVA14	SVB14	SVC14			B		
			SVA15	SVB15	SVC15	SVA16	SVB16	SVC16					
1157	1010000100		SVA17	SVB17	SVC17	SVA18	SVB18	SVC18			B		
			SVA19	SVB19	SVC19	SVA20	SVB20	SVC20					
1158	0110000100	Relay output display BC (Sub1)	SVA1	SVB1	SVC1	SVA2	SVB2	SVC2			B		
			SVA3	SVB3	SVC3	SVA4	SVB4	SVC4					
1159	1110000100		SVA5	SVB5	SVC5	SVA6	SVB6	SVC6			B		
			SVA7	SVB7	SVC7	SVA8	SVB8	SVC8					
1160	0001000100		SVA9	SVB9	SVC9	SVA10	SVB10	SVC10			B		
			SVA11	SVB11	SVC11	SVA12	SVB12	SVC12					
1161	1001000100		SVA13	SVB13	SVC13	SVA14	SVB14	SVC14			B		
			SVA15	SVB15	SVC15	SVA16	SVB16	SVC16					
1162	0101000100										B		
1163	1101000100	Relay output display BC (Sub2)	SVA1	SVB1	SVC1	SVA2	SVB2	SVC2			B		
			SVA3	SVB3	SVC3	SVA4	SVB4	SVC4					
1164	0011000100		SVA5	SVB5	SVC5	SVA6	SVB6	SVC6			B		
			SVA7	SVB7	SVC7	SVA8	SVB8	SVC8					
1165	1011000100		SVA9	SVB9	SVC9	SVA10	SVB10	SVC10			B		
			SVA11	SVB11	SVC11	SVA12	SVB12	SVC12					
1166	0111000100		SVA13	SVB13	SVC13	SVA14	SVB14	SVC14			B		
			SVA15	SVB15	SVC15	SVA16	SVB16	SVC16					
1167	1111000100										B		
1168	0000100100	Relay output display BC (Sub3)	SVA1	SVB1	SVC1	SVA2	SVB2	SVC2			B		
			SVA3	SVB3	SVC3	SVA4	SVB4	SVC4					
1169	1000100100		SVA5	SVB5	SVC5	SVA6	SVB6	SVC6			B		
			SVA7	SVB7	SVC7	SVA8	SVB8	SVC8					
1170	0100100100		SVA9	SVB9	SVC9	SVA10	SVB10	SVC10			B		
			SVA11	SVB11	SVC11	SVA12	SVB12	SVC12					
1171	1100100100		SVA13	SVB13	SVC13	SVA14	SVB14	SVC14			B		
			SVA15	SVB15	SVC15	SVA16	SVB16	SVC16					
1172	0010100100										B		

*1 A: The condition of either OC or OS is displayed individually. B: The condition of the entire refrigerant system is displayed.

Current data

No.	SW4 (SW6-9:ON, SW6-10:OFF)	Item	Display								Unit (A, B)*1		Remarks
	1234567890		LD1	LD2	LD3	LD4	LD5	LD6	LD7	LD8	OC	OS	
1173	1010100100	Relay output display BC (Sub4)	SVA1	SVB1	SVC1	SVA2	SVB2	SVC2			B		
			SVA3	SVB3	SVC3	SVA4	SVB4	SVC4					
1174	0110100100		SVA5	SVB5	SVC5	SVA6	SVB6	SVC6			B		
			SVA7	SVB7	SVC7	SVA8	SVB8	SVC8					
1175	1110100100		SVA9	SVB9	SVC9	SVA10	SVB10	SVC10			B		
			SVA11	SVB11	SVC11	SVA12	SVB12	SVC12					
1176	0001100100		SVA13	SVB13	SVC13	SVA14	SVB14	SVC14			B		
			SVA15	SVB15	SVC15	SVA16	SVB16	SVC16					
1177	1001100100										B		
1178	0101100100	Relay output display BC (Sub5)	SVA1	SVB1	SVC1	SVA2	SVB2	SVC2			B		
			SVA3	SVB3	SVC3	SVA4	SVB4	SVC4					
1179	1101100100		SVA5	SVB5	SVC5	SVA6	SVB6	SVC6			B		
			SVA7	SVB7	SVC7	SVA8	SVB8	SVC8					
1180	0011100100		SVA9	SVB9	SVC9	SVA10	SVB10	SVC10			B		
			SVA11	SVB11	SVC11	SVA12	SVB12	SVC12					
1181	1011100100		SVA13	SVB13	SVC13	SVA14	SVB14	SVC14			B		
			SVA15	SVB15	SVC15	SVA16	SVB16	SVC16					
1182	0111100100										B		
1183	1111100100	Relay output display BC (Sub6)	SVA1	SVB1	SVC1	SVA2	SVB2	SVC2			B		
			SVA3	SVB3	SVC3	SVA4	SVB4	SVC4					
1184	0000010100		SVA5	SVB5	SVC5	SVA6	SVB6	SVC6			B		
			SVA7	SVB7	SVC7	SVA8	SVB8	SVC8					
1185	1000010100		SVA9	SVB9	SVC9	SVA10	SVB10	SVC10			B		
			SVA11	SVB11	SVC11	SVA12	SVB12	SVC12					
1186	0100010100		SVA13	SVB13	SVC13	SVA14	SVB14	SVC14			B		
			SVA15	SVB15	SVC15	SVA16	SVB16	SVC16					
1187	1100010100										B		
1188	0010010100	Relay output display BC (Sub7)	SVA1	SVB1	SVC1	SVA2	SVB2	SVC2			B		
			SVA3	SVB3	SVC3	SVA4	SVB4	SVC4					
1189	1010010100		SVA5	SVB5	SVC5	SVA6	SVB6	SVC6			B		
			SVA7	SVB7	SVC7	SVA8	SVB8	SVC8					
1190	0110010100		SVA9	SVB9	SVC9	SVA10	SVB10	SVC10			B		
			SVA11	SVB11	SVC11	SVA12	SVB12	SVC12					
1191	1110010100		SVA13	SVB13	SVC13	SVA14	SVB14	SVC14			B		
			SVA15	SVB15	SVC15	SVA16	SVB16	SVC16					
1192	0001010100										B		
1193	1001010100	Relay output display BC (Sub8)	SVA1	SVB1	SVC1	SVA2	SVB2	SVC2			B		
			SVA3	SVB3	SVC3	SVA4	SVB4	SVC4					

*1 A: The condition of either OC or OS is displayed individually. B: The condition of the entire refrigerant system is displayed.

10 LED Status Indicators on the Outdoor Unit Circuit Board

10 LED Status Indicators on the Outdoor Unit Circuit Board

Current data

No.	SW4 (SW6-9:ON, SW6-10:OFF)	Item	Display								Unit (A, B)*1		Remarks
	1234567890		LD1	LD2	LD3	LD4	LD5	LD6	LD7	LD8	OC	OS	
1194	0101010100		SVA5	SVB5	SVC5	SVA6	SVB6	SVC6			B		
			SVA7	SVB7	SVC7	SVA8	SVB8	SVC8					
1195	1101010100		SVA9	SVB9	SVC9	SVA10	SVB10	SVC10			B		
			SVA11	SVB11	SVC11	SVA12	SVB12	SVC12					
1196	0011010100		SVA13	SVB13	SVC13	SVA14	SVB14	SVC14			B		
			SVA15	SVB15	SVC15	SVA16	SVB16	SVC16					
1197	1011010100										B		
1198	0111010100	Relay output display BC (Sub9)	SVA1	SVB1	SVC1	SVA2	SVB2	SVC2			B		
			SVA3	SVB3	SVC3	SVA4	SVB4	SVC4					
1199	1111010100		SVA5	SVB5	SVC5	SVA6	SVB6	SVC6			B		
			SVA7	SVB7	SVC7	SVA8	SVB8	SVC8					
1200	0000110100		SVA9	SVB9	SVC9	SVA10	SVB10	SVC10			B		
			SVA11	SVB11	SVC11	SVA12	SVB12	SVC12					
1201	1000110100		SVA13	SVB13	SVC13	SVA14	SVB14	SVC14			B		
			SVA15	SVB15	SVC15	SVA16	SVB16	SVC16					
1202	0100110100										B		
1203	1100110100	Relay output display BC (Sub10)	SVA1	SVB1	SVC1	SVA2	SVB2	SVC2			B		
			SVA3	SVB3	SVC3	SVA4	SVB4	SVC4					
1204	0010110100		SVA5	SVB5	SVC5	SVA6	SVB6	SVC6			B		
			SVA7	SVB7	SVC7	SVA8	SVB8	SVC8					
1205	1010110100		SVA9	SVB9	SVC9	SVA10	SVB10	SVC10			B		
			SVA11	SVB11	SVC11	SVA12	SVB12	SVC12					
1206	0110110100		SVA13	SVB13	SVC13	SVA14	SVB14	SVC14			B		
			SVA15	SVB15	SVC15	SVA16	SVB16	SVC16					
1207	1110110100										B		
1208	0001110100	Relay output display BC (Sub11)	SVA1	SVB1	SVC1	SVA2	SVB2	SVC2			B		
			SVA3	SVB3	SVC3	SVA4	SVB4	SVC4					
1209	1001110100		SVA5	SVB5	SVC5	SVA6	SVB6	SVC6			B		
			SVA7	SVB7	SVC7	SVA8	SVB8	SVC8					
1210	0101110100		SVA9	SVB9	SVC9	SVA10	SVB10	SVC10			B		
			SVA11	SVB11	SVC11	SVA12	SVB12	SVC12					
1211	1101110100		SVA13	SVB13	SVC13	SVA14	SVB14	SVC14			B		
			SVA15	SVB15	SVC15	SVA16	SVB16	SVC16					
1212	0011110100										B		
1213	1011110100										B		
1214	0111110100	BC (Main/Standard) TH11	-99.9 to 999.9								B		
1215	1111110100	BC (Main) TH12	-99.9 to 999.9								B		
1216	0000001100	BC (Main) TH15	-99.9 to 999.9								B		
1217	1000001100	BC (Main) TH16	-99.9 to 999.9								B		

*1 A: The condition of either OC or OS is displayed individually. B: The condition of the entire refrigerant system is displayed.

Current data

No.	SW4 (SW6-9:ON, SW6-10:OFF)	Item	Display								Unit (A, B)*1		Remarks
	1234567890		LD1	LD2	LD3	LD4	LD5	LD6	LD7	LD8	OC	OS	
1218	0100001100	BC (Main) PS1	-99.9 to 999.9								B		
1219	1100001100	BC (Main) PS3	-99.9 to 999.9								B		
1220	0010001100	BC (Main) SC11 (WCB SC14)	-99.9 to 999.9								B		The SC14 value will be displayed when a WCB is connected to the system.
1221	1010001100	BC (Main) SH12	-99.9 to 999.9								B		
1222	0110001100	BC (Main) SH13	-99.9 to 999.9								B		
1223	1110001100	BC (Main) SC16	-99.9 to 999.9								B		
1224	0001001100	BC (Main) LEV1	0000 to 9999								B		LEV1 opening
1225	1001001100	BC (Main) LEV2	0000 to 9999								B		LEV2 opening
1226	0101001100	BC (Main) LEV3	0000 to 9999								B		LEV3 opening
1227	1101001100	BC (Main) LEV4	0000 to 9999								B		LEV4 opening
1228	0011001100										B		
1229	1011001100										B		
1230	0111001100										B		
1231	1111001100	BC (Sub1) TH12	-99.9 to 999.9								B		
1232	0000101100	BC (Sub1) TH15	-99.9 to 999.9								B		
1233	1000101100	BC (Sub1) TH16	-99.9 to 999.9								B		
1234	0100101100												
1235	1100101100	BC (Sub1) PS3	-99.9 to 999.9								B		
1236	0010101100	BC (Sub1) LEV3	0000 to 9999								B		LEV3 opening
1237	1010101100										B		
1238	0110101100										B		
1239	1110101100	BC (Sub2) TH12	-99.9 to 999.9								B		
1240	0001101100	BC (Sub2) TH15	-99.9 to 999.9								B		
1241	1001101100	BC (Sub2) TH16	-99.9 to 999.9								B		
1242	0101101100												
1243	1101101100	BC (Sub2) PS3	-99.9 to 999.9								B		
1244	0011101100	BC (Sub2) LEV3	0000 to 9999								B		LEV3 opening
1245	1011101100										B		
1246	0111101100										B		
1247	1111101100	BC (Sub3) TH12	-99.9 to 999.9								B		
1248	0000011100	BC (Sub3) TH15	-99.9 to 999.9								B		
1249	1000011100	BC (Sub3) TH16	-99.9 to 999.9								B		
1250	0100011100												
1251	1100011100	BC (Sub3) PS3	-99.9 to 999.9								B		
1252	0010011100	BC (Sub3) LEV3	0000 to 9999								B		LEV3 opening
1253	1010011100										B		
1254	0110011100										B		
1255	1110011100	BC (Sub4) TH12	-99.9 to 999.9								B		
1256	0001011100	BC (Sub4) TH15	-99.9 to 999.9								B		
1257	1001011100	BC (Sub4) TH16	-99.9 to 999.9								B		
1258	0101011100												
1259	1101011100	BC (Sub4) PS3	-99.9 to 999.9								B		

*1 A: The condition of either OC or OS is displayed individually. B: The condition of the entire refrigerant system is displayed.

10 LED Status Indicators on the Outdoor Unit Circuit Board

10 LED Status Indicators on the Outdoor Unit Circuit Board

Current data

No.	SW4 (SW6-9:ON, SW6-10:OFF)	Item	Display								Unit (A, B)*1		Remarks
	1234567890		LD1	LD2	LD3	LD4	LD5	LD6	LD7	LD8	OC	OS	
1260	0011011100	BC (Sub4) LEV3	0000 to 9999								B		LEV3 opening
1261	1011011100										B		
1262	0111011100										B		
1263	1111011100	BC (Sub5) TH12	-99.9 to 999.9								B		
1264	0000111100	BC (Sub5) TH15	-99.9 to 999.9								B		
1265	1000111100	BC (Sub5) TH16	-99.9 to 999.9								B		
1266	0100111100												
1267	1100111100	BC (Sub5) PS3	-99.9 to 999.9								B		
1268	0010111100	BC (Sub5) LEV3	0000 to 9999								B		LEV3 opening
1269	1010111100										B		
1270	0110111100										B		
1271	1110111100	BC (Sub6) TH12	-99.9 to 999.9								B		
1272	0001111100	BC (Sub6) TH15	-99.9 to 999.9								B		
1273	1001111100	BC (Sub6) TH16	-99.9 to 999.9								B		
1274	0101111100												
1275	1101111100	BC (Sub6) PS3	-99.9 to 999.9								B		
1276	0011111100	BC (Sub6) LEV3	0000 to 9999								B		LEV3 opening
1277	1011111100										B		
1278	0111111100										B		
1279	1111111100	BC (Sub7) TH12	-99.9 to 999.9								B		
1280	0000000010	BC (Sub7) TH15	-99.9 to 999.9								B		
1281	1000000010	BC (Sub7) TH16	-99.9 to 999.9								B		
1282	0100000010												
1283	1100000010	BC (Sub7) PS3	-99.9 to 999.9								B		
1284	0010000010	BC (Sub7) LEV3	0000 to 9999								B		LEV3 opening
1285	1010000010										B		
1286	0110000010										B		
1287	1110000010	BC (Sub8) TH12	-99.9 to 999.9								B		
1288	0001000010	BC (Sub8) TH15	-99.9 to 999.9								B		
1289	1001000010	BC (Sub8) TH16	-99.9 to 999.9								B		
1290	0101000010												
1291	1101000010	BC (Sub8) PS3	-99.9 to 999.9								B		
1292	0011000010	BC (Sub8) LEV3	0000 to 9999								B		LEV3 opening
1293	1011000010										B		
1294	0111000010										B		
1295	1111000010	BC (Sub9) TH12	-99.9 to 999.9								B		
1296	0000100010	BC (Sub9) TH15	-99.9 to 999.9								B		
1297	1000100010	BC (Sub9) TH16	-99.9 to 999.9								B		
1298	0100100010												
1299	1100100010	BC (Sub9) PS3	-99.9 to 999.9								B		
1300	0010100010	BC (Sub9) LEV3	0000 to 9999								B		LEV3 opening
1301	1010100010										B		
1302	0110100010										B		

*1 A: The condition of either OC or OS is displayed individually. B: The condition of the entire refrigerant system is displayed.

Current data

No.	SW4 (SW6-9:ON, SW6-10:OFF)	Item	Display								Unit (A, B)*1		Remarks
	1234567890		LD1	LD2	LD3	LD4	LD5	LD6	LD7	LD8	OC	OS	
1303	1110100010	BC (Sub10) TH12	-99.9 to 999.9								B		
1304	0001100010	BC (Sub10) TH15	-99.9 to 999.9								B		
1305	1001100010	BC (Sub10) TH16	-99.9 to 999.9								B		
1306	0101100010												
1307	1101100010	BC (Sub10) PS3	-99.9 to 999.9								B		
1308	0011100010	BC (Sub10) LEV3	0000 to 9999								B		LEV3 opening
1309	1011100010										B		
1310	0111100010										B		
1311	1111100010	BC (Sub11) TH12	-99.9 to 999.9								B		
1312	0000010010	BC (Sub11) TH15	-99.9 to 999.9								B		
1313	1000010010	BC (Sub11) TH16	-99.9 to 999.9								B		
1314	0100010010												
1315	1100010010	BC (Sub11) PS3	-99.9 to 999.9								B		
1316	0010010010	BC (Sub11) LEV3	0000 to 9999								B		LEV3 opening
1317	1010010010										B		
1318	0110010010										B		

*1 A: The condition of either OC or OS is displayed individually. B: The condition of the entire refrigerant system is displayed.

10 LED Status Indicators on the Outdoor Unit Circuit Board

Data before error

No.	SW4 (SW6 - 9: ON, SW6-10: OFF)	Item	Display								Unit (A, B) *1		Remarks
	1234567890		LD1	LD2	LD3	LD4	LD5	LD6	LD7	LD8	OC	OS	
1550	0111000001	BC (Main/Standard) TH11	-99.9 to 999.9								B		
1551	1111000001	BC (Main) TH12	-99.9 to 999.9								B		
1552	0000100001	BC (Main) TH15	-99.9 to 999.9								B		
1553	1000100001	BC (Main) TH16	-99.9 to 999.9								B		
1554	0100100001												
1555	1100100001	BC (Main) PS3	-99.9 to 999.9								B		
1556	0010100001												
1557	1010100001												
1558	0110100001												
1559	1110100001												
1560	0001100001	BC (Main) LEV1	0000 to 9999								B		LEV1 opening
1561	1001100001	BC (Main) LEV2	0000 to 9999								B		LEV2 opening
1562	0101100001	BC (Main) LEV3	0000 to 9999								B		LEV3 opening
1563	1101100001	BC (Main) LEV4	0000 to 9999								B		LEV4 opening
1564	0011100001												
1565	1011100001												
1566	0111100001												
1567	1111100001	BC (Sub1) TH12	-99.9 to 999.9								B		
1568	0000010001	BC (Sub1) TH15	-99.9 to 999.9								B		
1569	1000010001	BC (Sub1) TH16	-99.9 to 999.9								B		
1570	0100010001												
1571	1100010001	BC (Sub1) PS3	-99.9 to 999.9								B		
1572	0010010001	BC (Sub1) LEV3	0000 to 9999								B		LEV3 opening
1573	1010010001												
1574	0110010001												
1575	1110010001	BC (Sub2) TH12	-99.9 to 999.9								B		
1576	0001010001	BC (Sub2) TH15	-99.9 to 999.9								B		
1577	1001010001	BC (Sub2) TH16	-99.9 to 999.9								B		
1578	0101010001												
1579	1101010001	BC (Sub2) PS3	-99.9 to 999.9								B		
1580	0011010001	BC (Sub2) LEV3	0000 to 9999								B		LEV3 opening
1581	1011010001												
1582	0111010001												
1583	1111010001	BC (Sub3) TH12	-99.9 to 999.9								B		
1584	0000110001	BC (Sub3) TH15	-99.9 to 999.9								B		
1585	1000110001	BC (Sub3) TH16	-99.9 to 999.9								B		
1586	0100110001												
1587	1100110001	BC (Sub3) PS3	-99.9 to 999.9								B		
1588	0010110001	BC (Sub3) LEV3	0000 to 9999								B		LEV3 opening
1589	1010110001												
1590	0110110001												
1591	1110110001	BC (Sub4) TH12	-99.9 to 999.9								B		

*1 A: The condition of either OC or OS is displayed individually. B: The condition of the entire refrigerant system is displayed.

Data before error

No.	SW4 (SW6 - 9: ON, SW6-10: OFF)	Item	Display								Unit (A, B) *1		Remarks
	1234567890		LD1	LD2	LD3	LD4	LD5	LD6	LD7	LD8	OC	OS	
1592	0001110001	BC (Sub4) TH15	-99.9 to 999.9								B		
1593	1001110001	BC (Sub4) TH16	-99.9 to 999.9								B		
1594	0101110001												
1595	1101110001	BC (Sub4) PS3	-99.9 to 999.9								B		
1596	0011110001	BC (Sub4) LEV3	0000 to 9999								B		LEV3 opening
1597	1011110001												
1598	0111110001												
1599	1111110001	BC (Sub5) TH12	-99.9 to 999.9								B		
1600	0000001001	BC (Sub5) TH15	-99.9 to 999.9								B		
1601	1000001001	BC (Sub5) TH16	-99.9 to 999.9								B		
1602	0100001001												
1603	1100001001	BC (Sub5) PS3	-99.9 to 999.9								B		
1604	0010001001	BC (Sub5) LEV3	0000 to 9999								B		LEV3 opening
1605	1010001001												
1606	0110001001												
1607	1110001001	BC (Sub6) TH12	-99.9 to 999.9								B		
1608	0001001001	BC (Sub6) TH15	-99.9 to 999.9								B		
1609	1001001001	BC (Sub6) TH16	-99.9 to 999.9								B		
1610	0101001001												
1611	1101001001	BC (Sub6) PS3	-99.9 to 999.9								B		
1612	0011001001	BC (Sub6) LEV3	0000 to 9999								B		LEV3 opening
1613	1011001001												
1614	0111001001												
1615	1111001001	BC (Sub7) TH12	-99.9 to 999.9								B		
1616	0000101001	BC (Sub7) TH15	-99.9 to 999.9								B		
1617	1000101001	BC (Sub7) TH16	-99.9 to 999.9								B		
1618	0100101001												
1619	1100101001	BC (Sub7) PS3	-99.9 to 999.9								B		
1620	0010101001	BC (Sub7) LEV3	0000 to 9999								B		LEV3 opening
1621	1010101001												
1622	0110101001												
1623	1110101001	BC (Sub8) TH12	-99.9 to 999.9								B		
1624	0001101001	BC (Sub8) TH15	-99.9 to 999.9								B		
1625	1001101001	BC (Sub8) TH16	-99.9 to 999.9								B		
1626	0101101001												
1627	1101101001	BC (Sub8) PS3	-99.9 to 999.9								B		
1628	0011101001	BC (Sub8) LEV3	0000 to 9999								B		LEV3 opening
1629	1011101001												
1630	0111101001												
1631	1111101001	BC (Sub9) TH12	-99.9 to 999.9								B		
1632	0000011001	BC (Sub9) TH15	-99.9 to 999.9								B		
1633	1000011001	BC (Sub9) TH16	-99.9 to 999.9								B		
1634	0100011001												

*1 A: The condition of either OC or OS is displayed individually. B: The condition of the entire refrigerant system is displayed.

10 LED Status Indicators on the Outdoor Unit Circuit Board

10 LED Status Indicators on the Outdoor Unit Circuit Board

Data before error

No.	SW4 (SW6 - 9: ON, SW6-10: OFF)	Item	Display								Unit (A, B) *1		Remarks
	1234567890		LD1	LD2	LD3	LD4	LD5	LD6	LD7	LD8	OC	OS	
1635	1100011001	BC (Sub9) PS3	-99.9 to 999.9								B		
1636	0010011001	BC (Sub9) LEV3	0000 to 9999								B		LEV3 opening
1637	1010011001												
1638	0110011001												
1639	1110011001	BC (Sub10) TH12	-99.9 to 999.9								B		
1640	0001011001	BC (Sub10) TH15	-99.9 to 999.9								B		
1641	1001011001	BC (Sub10) TH16	-99.9 to 999.9								B		
1642	0101011001												
1643	1101011001	BC (Sub10) PS3	-99.9 to 999.9								B		
1644	0011011001	BC (Sub10) LEV3	0000 to 9999								B		LEV3 opening
1645	1011011001												
1646	0111011001												
1647	1111011001	BC (Sub11) TH12	-99.9 to 999.9								B		
1648	0000111001	BC (Sub11) TH15	-99.9 to 999.9								B		
1649	1000111001	BC (Sub11) TH16	-99.9 to 999.9								B		
1650	0100111001												
1651	1100111001	BC (Sub11) PS3	-99.9 to 999.9								B		
1652	0010111001	BC (Sub11) LEV3	0000 to 9999								B		LEV3 opening
1653	1010111001												
1654	0110111001												
1655	1110111001												

*1 A: The condition of either OC or OS is displayed individually. B: The condition of the entire refrigerant system is displayed.

Service Handbook

Model

PURY-P72, P96, P120, P144, P168T(Y)NU-A/A1
PURY-P192, P216, P240, P264, P288, P312, P336T(Y)SNU-A/A1

PURY-EP72, EP96, EP120, EP144, EP168, EP192, EP216, EP240T(Y)NU-A/A1
PURY-EP192, EP216, EP240, EP264, EP288, EP312, EP336, EP384, EP432T(Y)SNU-A/A1

MITSUBISHI ELECTRIC CORPORATION

www.MitsubishiElectric.com

HWE1821F

New publication effective Mar. 2024
Specifications subject to change without notice