MITSUBISHI ELECTRIC

SPLIT-TYPE AIR CONDITIONERS

Revision E:
- LEAD WIRE ASSEMBLY have been added.

OBB802 REVISED EDITION-D is void.

INDOOR UNIT

No. OBB802
REVISED EDITION-E

PARTS CATALOG

Models

MLZ-KP09NA - U1
MLZ-KP12NA - U1
MLZ-KP18NA - U1
MLZ-KP09NA2 - U1
MLZ-KP12NA2 - U1
MLZ-KP18NA2 - U1

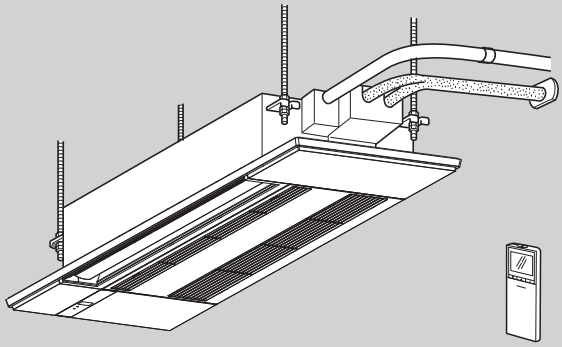

CONTENTS

1. SERVICE PARTS LIST 2
2. OPTIONAL PARTS 14

SERVICE MANUAL (OBH802)

Revision A:
• GRILLE MLP-444WU has been added.

Revision B:
• MLZ-KP09/12/18NA2-U1 have been added.

Revision C:
• MLP-449WU has been added.

Revision D:
• Some descriptions have been corrected.

Revision E:
• LEAD WIRE ASSEMBLY have been added.

1 SERVICE PARTS LIST

MLZ-KP09NA MLZ-KP12NA MLZ-KP18NA
1-1. INDOOR UNIT STRUCTURAL PARTS AND FUNCTIONAL PARTS

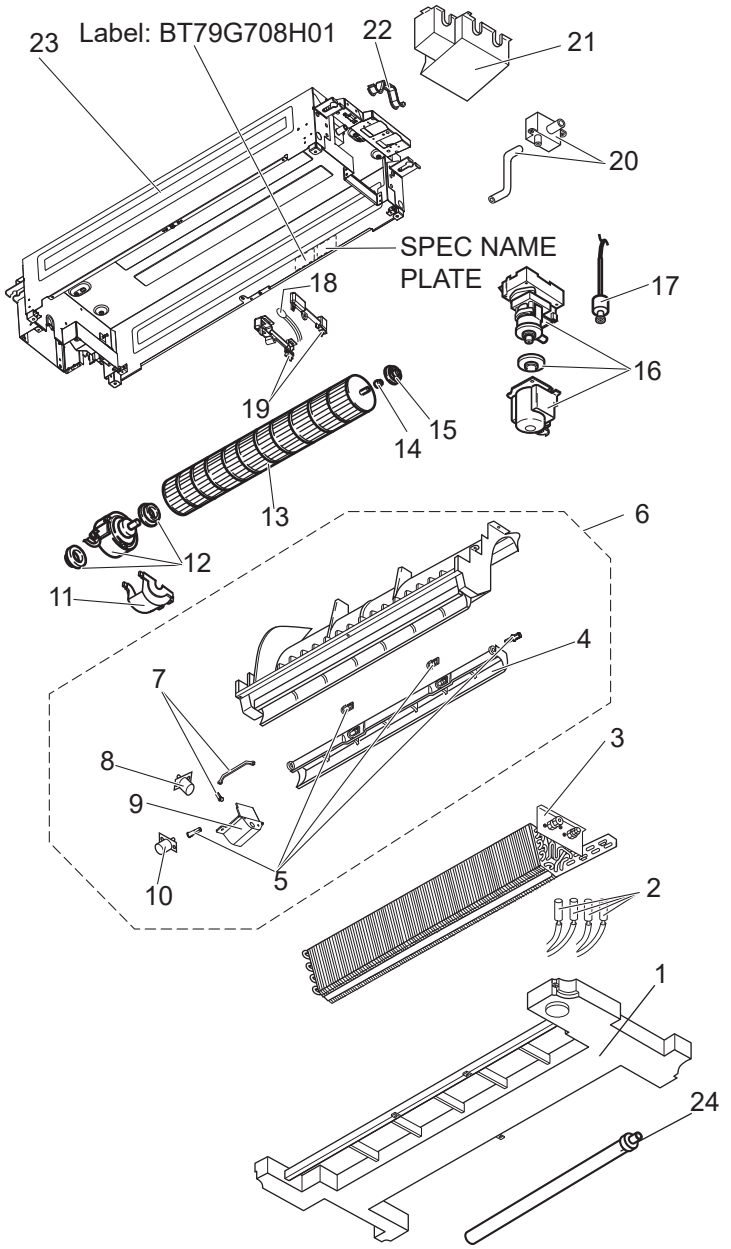

1-1. INDOOR UNIT STRUCTURAL PARTS AND FUNCTIONAL PARTS

1. The part quantity below indicates the required number of pieces per unit.

No.	Part No.	Part Name	MLZ-KP09NA-□U1	MLZ-KP12NA-□U1	MLZ-KP18NA-□U1	Symbol in Wiring Diagram	Remarks
1	M21 EA4 700	DRAIN PAN	1	1	1		
2	M21 EAP 307	INDOOR COIL THERMISTOR	1	1		RT12, RT13	
2	M21 EAS 307	INDOOR COIL THERMISTOR			1	RT12, RT13, RT14	
2	M21 EAR 307	INDOOR COIL THERMISTOR			1	RT15	
3	M21 EGC 620	INDOOR HEAT EXCHANGER	1	1			
3	M21 EG7 620	INDOOR HEAT EXCHANGER			1		
4	M21 EAF 040	HORIZONTAL VANE	1	1	1		
5	M21 L9V 049	VANE SHAFT	1	1	1		
6	M21 EA4 279	STABILIZER ASSEMBLY	1	1	1		Includes vertical vane
7	M21 L9V 915	LINK	1	1	1		CRANK SET
8	M21 L9V 306	VERTICAL VANE MOTOR	1	1	1	MV2	
9	M21 EA0 953	VANE MOTOR SUPPORT	1	1	1		
10	M21 EAL 306	HORIZONTAL VANE MOTOR	1	1	1	MV1	
11	M21 L9V 024	MOTOR BAND	1	1	1		
12	T2W ED4 300	INDOOR FAN MOTOR	1	1	1	MF	RC0J30-□□
13	M21 L9V 302	LINE FLOW FAN	1	1	1		
14	M21 L9V 504	SLEEVE BEARING	1	1	1		
15	M21 L9V 509	BEARING MOUNT	1	1	1		
16	T2W EA1 303	DRAIN PUMP SET	1	1	1	DP	Includes CUSHION x 2, BASE, COVER SET
17	M21 L9V 312	FLOAT SENSOR	1	1	1	FS	
18	M21 EAG 307	ROOM TEMPERATURE THERMISTOR	1	1	1	RT11	
19	M21 L9V 783	SENSOR HOLDER	1	1	1		COVER, HOLDER SET
20	M21 EA2 703	DRAIN PIPE	1	1	1		
21	M21 L9V 249	DRAIN COVER	1	1	1		
22	M21 L9V 708	PIPE FIXING BAND	1	1			
22	M21 L3W 708	PIPE FIXING BAND			1		
23	—	CABINET ASSEMBLY	1	1	1		DT00A664G91, Not including SPEC NAME PLATE LABEL
24	M21 EA9 703	DRAIN HOSE	1	1	1		

MLZ-KP09NA MLZ-KP12NA MLZ-KP18NA
1-2. INDOOR UNIT ELECTRICAL PARTS AND FUNCTIONAL PARTS

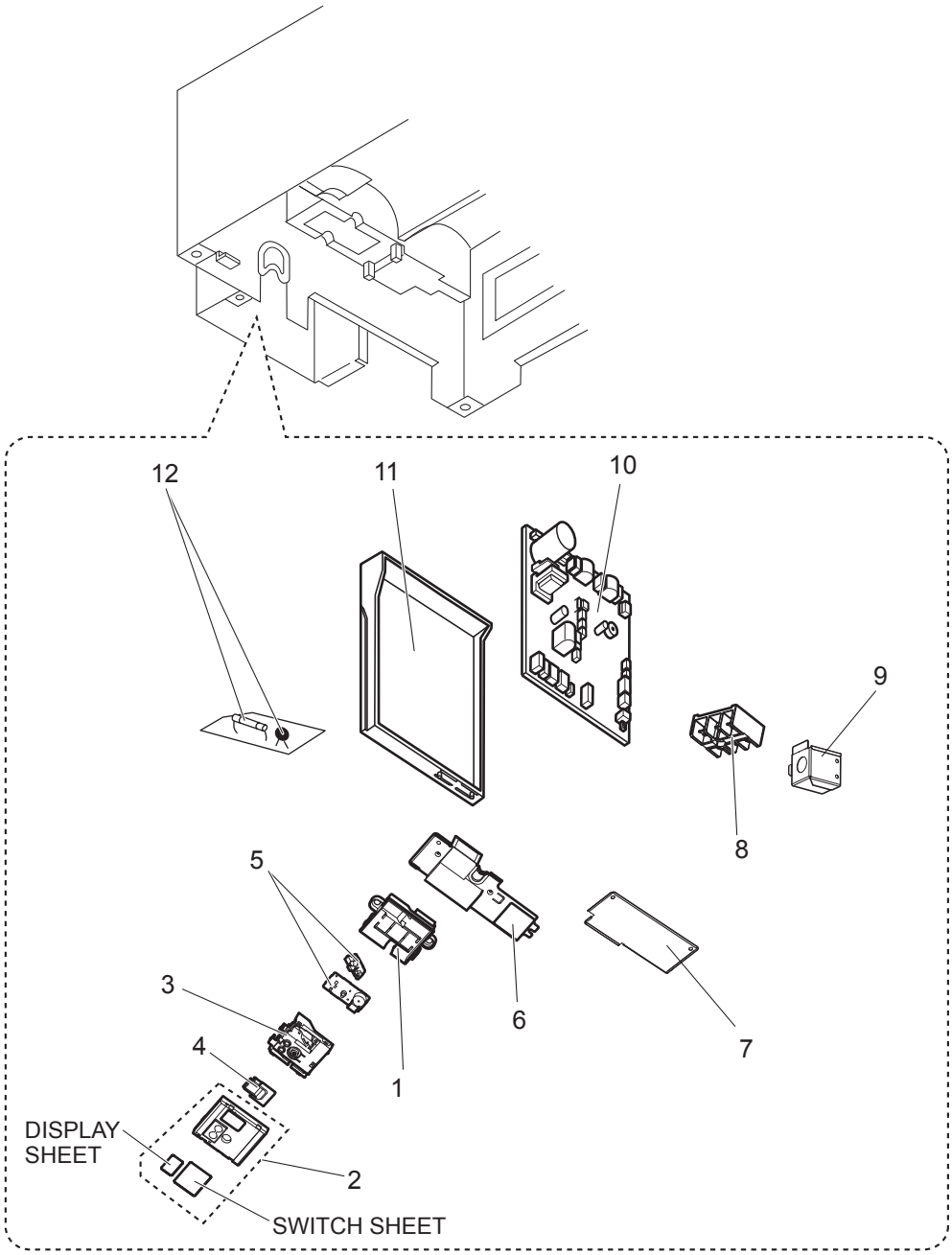

1-3. ACCESSORY AND REMOTE CONTROLLER

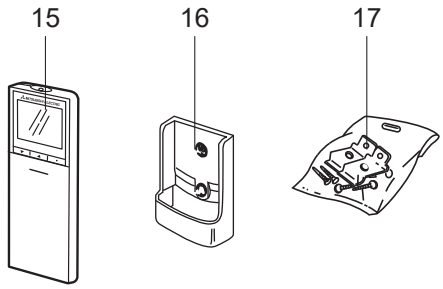

OBB802E

1-2. INDOOR UNIT ELECTRICAL PARTS AND FUNCTIONAL PARTS

1. The part quantity below indicates the required number of pieces per unit.
2. The circled No. indicates that the part is not shown in the figure.

No.	Part No.	Part Name	MLZ-KP09NA-U1	MLZ-KP12NA-U1	MLZ-KP18NA-U1	Symbol in Wiring Diagram	Remarks
1	—	DL COVER ASSEMBLY	1	1	1		RK00C864G02
2	—	DISPLAY RECEIVER COVER ASSEMBLY	1				RK00G135G58
2	—	DISPLAY RECEIVER COVER ASSEMBLY		1			RK00G135G59
2	—	DISPLAY RECEIVER COVER ASSEMBLY			1		RK00G135G60
3	—	DISPLAY RECEIVER HOLDER	1	1	1		BK25V915G02
4	—	RECEIVER COVER	1	1	1		BK25V917G02
5	T2W EA6 326	DISPLAY RECEIVER P.C. BOARD ASSEMBLY	1	1	1		
6	—	PB COVER ASSEMBLY	1	1	1		RK00C861G06
7	—	TB COVER ASSEMBLY	1	1			JG00G689G51
7	—	TB COVER ASSEMBLY			1		JG00G689G52
8	M21 EA3 376	TERMINAL BLOCK	1	1	1	TB	3P
9	—	CONDUIT PLATE	1	1	1		RK02G580G01
10	T2W F2E 450	ELECTRONIC CONTROL P.C. BOARD	1				
10	T2W F2F 450	ELECTRONIC CONTROL P.C. BOARD		1			
10	T2W F2G 450	ELECTRONIC CONTROL P.C. BOARD			1		
11	M21 L9V 784	ELECTRONIC CONTROL P.C. BOARD BOX	1	1	1		
12	M21 EA5 313	FUSE VARISTOR SET	1	1	1	F11, NR11	T3.15AL250V
⑬	—	LEAD WIRE ASSEMBLY (DISPLAY RECEIVER P.C. BOARD)	1	1	1		BT78G837G02
⑭	—	LEAD WIRE ASSEMBLY (VANE MOTOR)	1	1	1		DY00C301G02

1-3. ACCESSORY AND REMOTE CONTROLLER

1. The part quantity below indicates the required number of pieces per unit.

No.	Part No.	Part Name	MLZ-KP09NA-U1	MLZ-KP12NA-U1	MLZ-KP18NA-U1	Symbol in Wiring Diagram	Remarks
15	T2W EF0 426	REMOTE CONTROLLER	1	1	1		SG176
16	T2W EA0 083	REMOTE CONTROLLER HOLDER	1	1	1		
17	M21 EA6 250	SCREW ASSEMBLY	1	1	1		

MLZ-KP09NA MLZ-KP12NA
1-4. LEAD WIRE ASSEMBLY

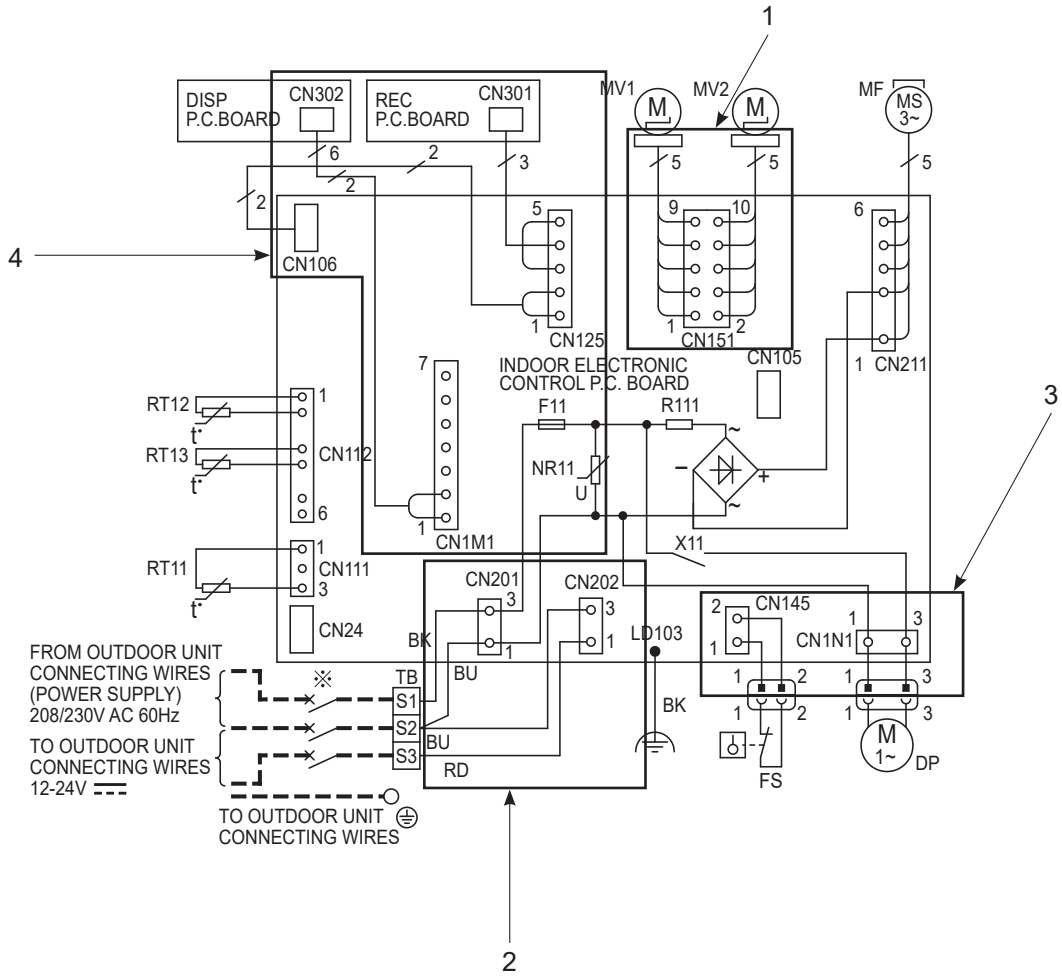

1-4. LEAD WIRE ASSEMBLY

1. The part quantity below indicates the required number of pieces per unit.

No.	Part No.	Part Name	MLZ-KP09NA-U1	MLZ-KP12NA-U1	Symbol in Wiring Diagram	Remarks [Drawing No.]
1	T2W EE2 397	LEAD WIRE ASSEMBLY	1	1		CN151 (CONTROL P.C. BOARD) – MV1/MV2 (VANE MOTOR)
2	T2W EE3 397	LEAD WIRE ASSEMBLY	1	1		CN201/CN202 (CONTROL P.C. BOARD) – S1/S2/S3 (TERMINAL BLOCK)
3	T2W EE4 397	LEAD WIRE ASSEMBLY	1	1		CN145/CN1N1 (CONTROL P.C. BOARD) – RELAY CONNECTOR (FLOAT SENSOR/DRAIN PUMP)
4	T2W EE5 397	LEAD WIRE ASSEMBLY	1	1		CN1M1/CN125/CN106 (CONTROL P.C. BOARD) – CN301 (REC P.C. BOARD) and CN302 (DISP P.C.BOARD)

MLZ-KP18NA
1-5. LEAD WIRE ASSEMBLY

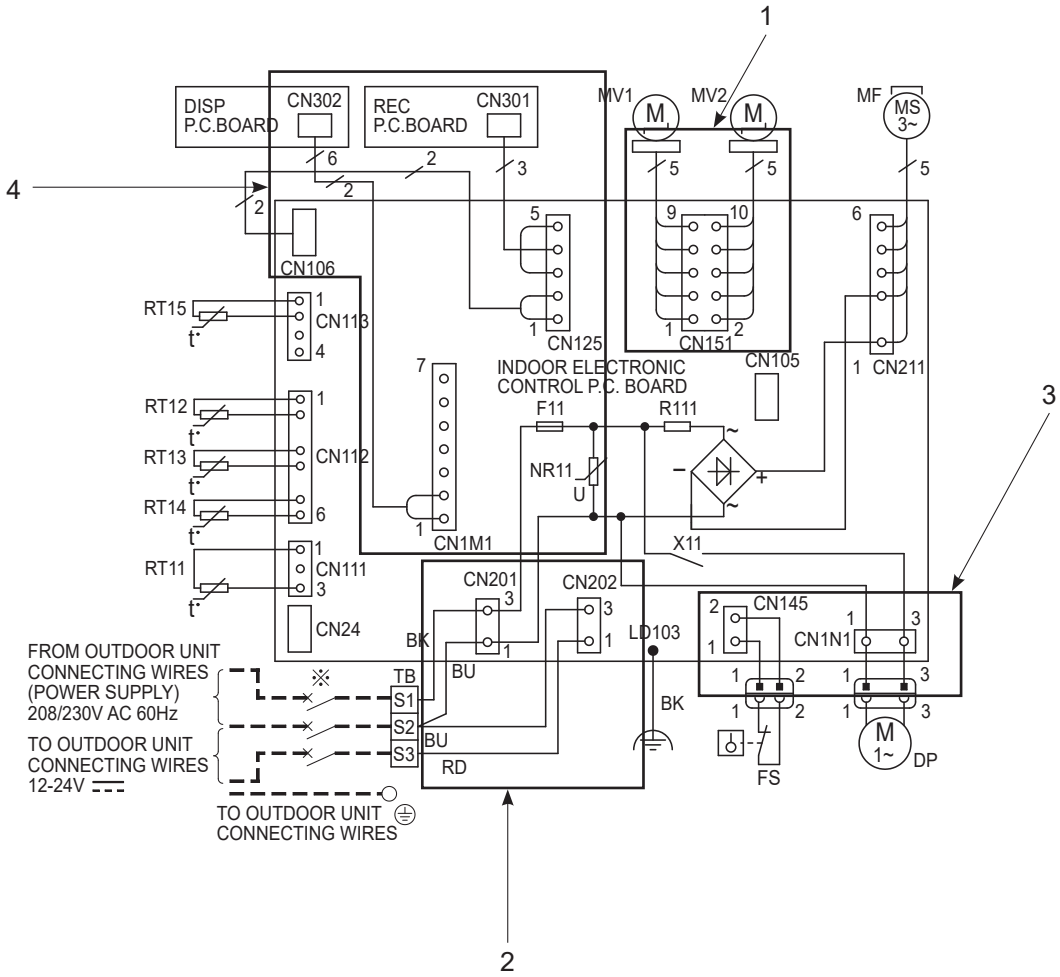

1-5. LEAD WIRE ASSEMBLY

1. The part quantity below indicates the required number of pieces per unit.

No.	Part No.	Part Name	MLZ-KP18NA-U1	Symbol in Wiring Diagram	Remarks [Drawing No.]
1	T2W EE2 397	LEAD WIRE ASSEMBLY	1		CN151 (CONTROL P.C. BOARD) – MV1/MV2 (VANE MOTOR)
2	T2W EE3 397	LEAD WIRE ASSEMBLY	1		CN201/CN202 (CONTROL P.C. BOARD) – S1/S2/S3 (TERMINAL BLOCK)
3	T2W EE4 397	LEAD WIRE ASSEMBLY	1		CN145/CN1N1 (CONTROL P.C. BOARD) – RELAY CONNECTOR (FLOAT SENSOR/DRAIN PUMP)
4	T2W EE5 397	LEAD WIRE ASSEMBLY	1		CN1M1/CN125/CN106 (CONTROL P.C. BOARD) – CN301 (REC P.C. BOARD) and CN302 (DISP P.C.BOARD)

MLZ-KP09NA2 MLZ-KP12NA2 MLZ-KP18NA2
1-6. INDOOR UNIT STRUCTURAL PARTS AND FUNCTIONAL PARTS

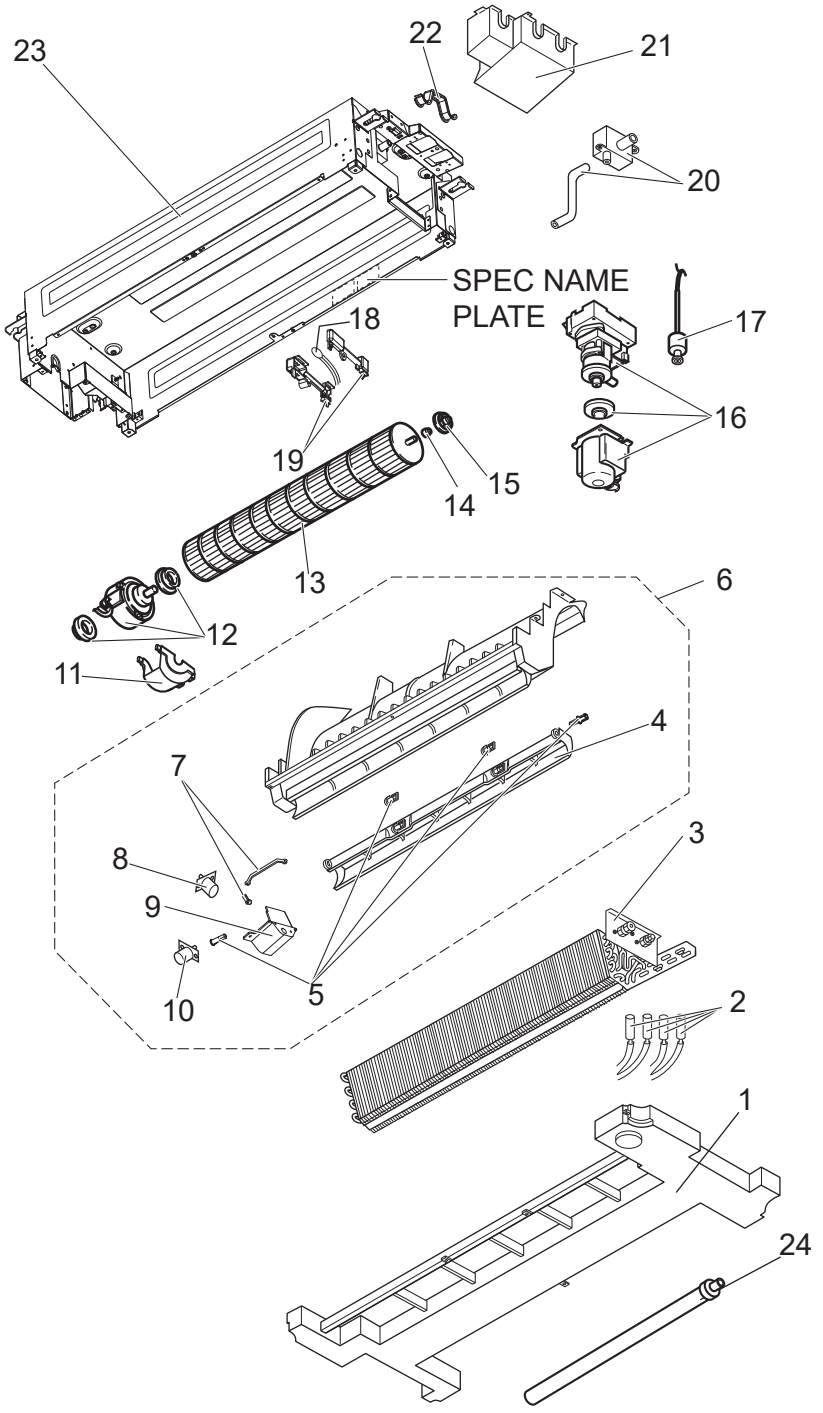

1-6. INDOOR UNIT STRUCTURAL PARTS AND FUNCTIONAL PARTS

1. The part quantity below indicates the required number of pieces per unit.

No.	Part No.	Part Name	MLZ-KP09NA2-□U1	MLZ-KP12NA2-□U1	MLZ-KP18NA2-□U1	Symbol in Wiring Diagram	Remarks
1	U01 A01 529	DRAIN PAN	1	1	1		
2	U01 A07 307	INDOOR COIL THERMISTOR	1	1		RT12, RT13	
2	U01 A08 307	INDOOR COIL THERMISTOR			1	RT15	
2	U01 A06 307	INDOOR COIL THERMISTOR			1	RT12, RT13, RT14	
3	U01 A05 620	INDOOR HEAT EXCHANGER	1	1			
3	U01 A06 620	INDOOR HEAT EXCHANGER			1		
4	U01 A01 042	HORIZONTAL VANE	1	1	1		
5	U01 A01 043	VANE SHAFT SET	1	1	1		
6	U01 A01 236	STABILIZER ASSEMBLY	1	1	1		Includes vertical vane
7	U01 A02 034	LINK	1	1	1		CRANK SET
8	U01 A01 044	VERTICAL VANE MOTOR	1	1	1	MV2	
9	U01 A01 045	VANE MOTOR SUPPORT	1	1	1		
10	U01 A01 046	HORIZONTAL VANE MOTOR	1	1	1	MV1	
11	U01 A03 333	MOTOR BAND	1	1	1		
12	U01 A03 300	INDOOR FAN MOTOR	1	1	1	MF	RC0J30-□□
13	U01 A02 302	LINE FLOW FAN	1	1	1		
14	U01 A01 504	SLEEVE BEARING	1	1	1		
15	U01 A05 510	BEARING MOUNT	1	1	1		
16	U01 A01 539	DRAIN PUMP SET	1	1	1	DP	Includes CUSHION x 2, BASE, COVER SET
17	U01 A01 541	FLOAT SENSOR	1	1	1	FS	
18	U01 A07 308	ROOM TEMPERATURE THERMISTOR	1	1	1	RT11	
19	U01 A01 084	SENSOR HOLDER	1	1	1		COVER, HOLDER SET
20	U01 002 090	DRAIN PIPE	1	1	1		
21	U01 A01 635	DRAIN COVER	1	1	1		
22	U01 A02 558	PIPE FIXING BAND	1	1			
22	U01 A03 558	PIPE FIXING BAND			1		
23	U01 A02 234	CABINET ASSEMBLY	1	1	1		RK00Y586G13, Not includes SPEC NAME PLATE LABEL
24	U01 A02 702	DRAIN HOSE	1	1	1		

MLZ-KP09NA2 MLZ-KP12NA2 MLZ-KP18NA2
1-7. INDOOR UNIT ELECTRICAL PARTS AND FUNCTIONAL PARTS

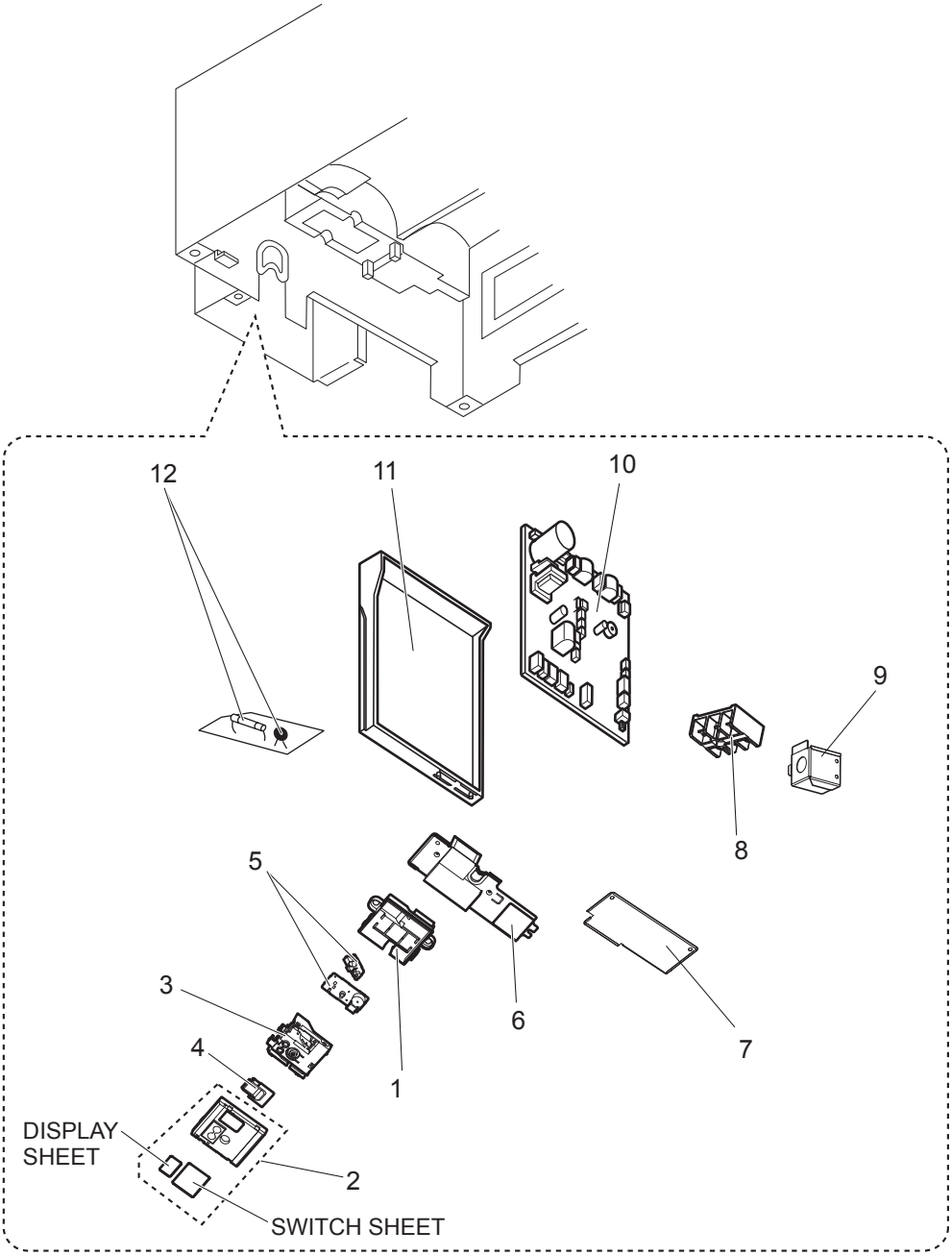

1-8. ACCESSORY AND REMOTE CONTROLLER

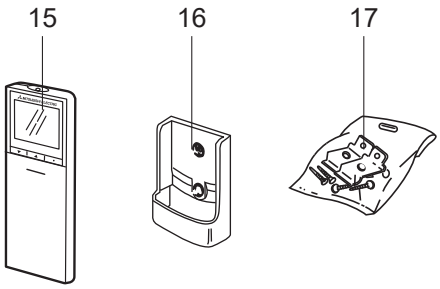

OBB802E

1-7. INDOOR UNIT ELECTRICAL PARTS AND FUNCTIONAL PARTS

1. The part quantity below indicates the required number of pieces per unit.
2. The circled No. indicates that the part is not shown in the figure.

No.	Part No.	Part Name	MLZ-KP09NA2-U1	MLZ-KP12NA2-U1	MLZ-KP18NA2-U1	Symbol in Wiring Diagram	Remarks
1	U01 A01 815	DISPLAY LEAD COVER	1	1	1		
2	U01 A02 815	DISPLAY RECEIVER COVER	1	1	1		
3	U01 A01 085	DISPLAY RECEIVER HOLDER	1	1	1		
4	U01 A01 817	RECEIVER COVER	1	1	1		
5	U01 A37 452	DISPLAY RECEIVER P.C. BOARD	1	1	1		
6	U01 A02 811	PB COVER	1	1	1		
7	U01 A01 814	TB COVER	1	1			
7	U01 A02 814	TB COVER			1		
8	U01 A04 374	TERMINAL BLOCK	1	1	1	TB	3P
9	U01 A05 978	CONDUIT PLATE	1	1	1		
10	U01 A55 452	ELECTRONIC CONTROL P.C. BOARD	1				
10	U01 A56 452	ELECTRONIC CONTROL P.C. BOARD		1			
10	U01 A57 452	ELECTRONIC CONTROL P.C. BOARD			1		
11	U01 A01 690	ELECTRONIC CONTROL P.C. BOARD BOX	1	1	1		
12	U01 001 239	FUSE VARISTOR SET	1	1	1	F11, NR11, NR12	T3.15AL250V
⑬	U01 A01 392	LEAD WIRE	1	1	1		
⑭	U01 A02 392	LEAD WIRE	1	1	1		

1-8. ACCESSORY AND REMOTE CONTROLLER

1. The part quantity below indicates the required number of pieces per unit.

No.	Part No.	Part Name	MLZ-KP09NA2-U1	MLZ-KP12NA2-U1	MLZ-KP18NA2-U1	Symbol in Wiring Diagram	Remarks
15	U01 A10 426	REMOTE CONTROLLER	1	1	1		SG176
16	U01 A02 083	REMOTE CONTROLLER HOLDER	1	1	1		
17	U01 001 087	SCREW ASSEMBLY	1	1	1		

2 OPTIONAL PARTS

MLZ-KP09NA MLZ-KP12NA MLZ-KP18NA MLZ-KP09NA2 MLZ-KP12NA2 MLZ-KP18NA2

2-1. GRILLE

MLP-444W: MLZ-KP•NA-U1 MLZ-KP•NA2-U1

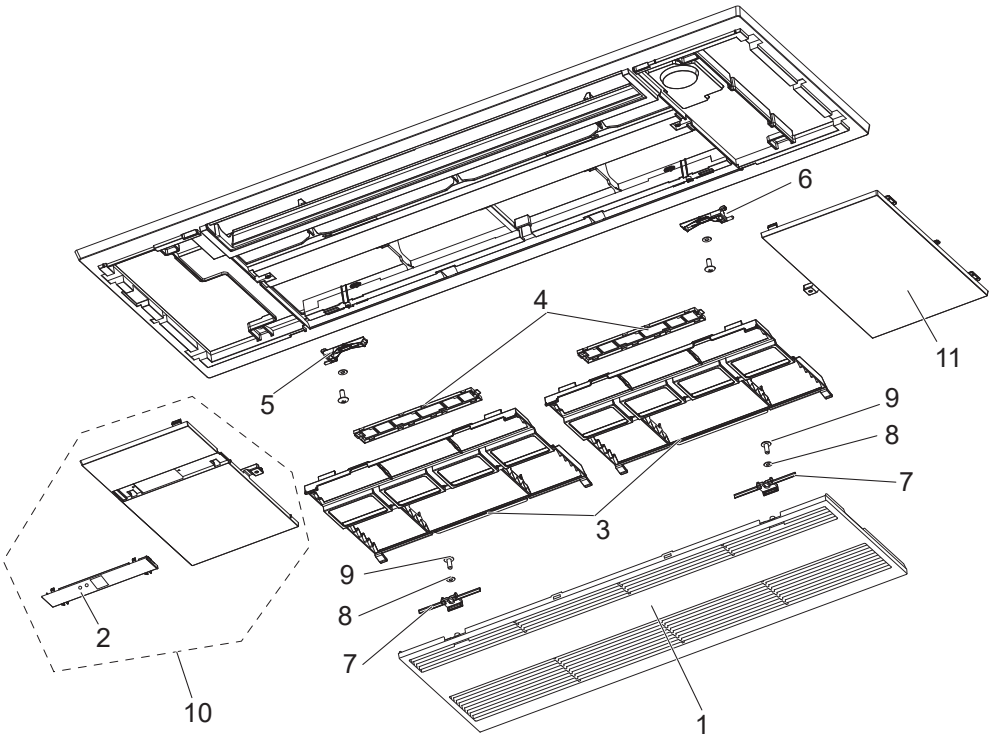

1. The part quantity below indicates the required number of pieces per unit.
2. The circled No. indicates that the part is not shown in the figure.

No.	Part No.	Part Name	MLP-444W	Symbol in Wiring Diagram	Remarks
1	M21 ECA 010	GRILLE ASSEMBLY (W)	1		
2	T2W EB0 093	DISPLAY COVER SET	1		
3	M21 EBF 100	AIR FILTER (AIR PURIFYING FILTER)	2		
4	—	AIR CLEANING FILTER (ANTI-ALLERGY ENZYME FILTER)	1		MAC-408FT-E
5	M21 EA0 054	GRILLE SHAFT L	1		
6	M21 EA1 054	GRILLE SHAFT R	1		
7	M21 EAC 049	GRILLE KNOB (W)	2		
8	—	WASHER	2		Z006Z051H07
9	—	SCREW	2		Z004Z015H37
10	T2W EA6 975	SIDE PANEL L ASSEMBLY (W)	1		
11	M21 EAZ 976	SIDE PANEL R ASSEMBLY (W)	1		
12	M21 EAF 067	SCREW CAP (W)	1		
13	M21 EA9 250	SCREW ASSEMBLY	1		

GRILLE: MLP-444W

Unit: inch

1.SPECIFICATION

ITEM		CONTENTS
EXTERIOR	COLOR(MUNSELL NO.)	WHITE(4.0GY 9.1/0.2)
	SURFACE TREATMENT	NONE
	MATERIAL	ABS RESIN
MASS		8LBS.

2.OUTLINE DRAWING

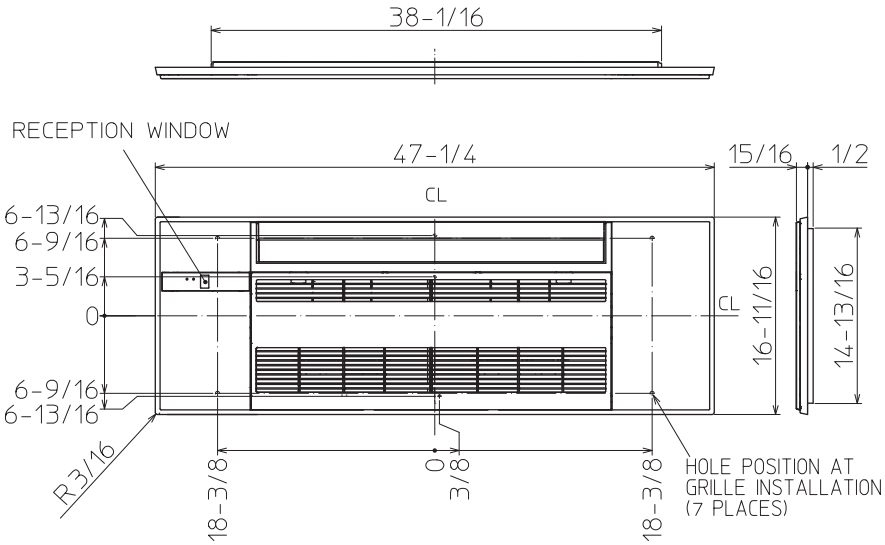

MLZ-KP09NA MLZ-KP12NA MLZ-KP18NA MLZ-KP09NA2 MLZ-KP12NA2 MLZ-KP18NA2

2-2. GRILLE

MLP-444WU: MLZ-KP•NA-U1 MLZ-KP•NA2-U1

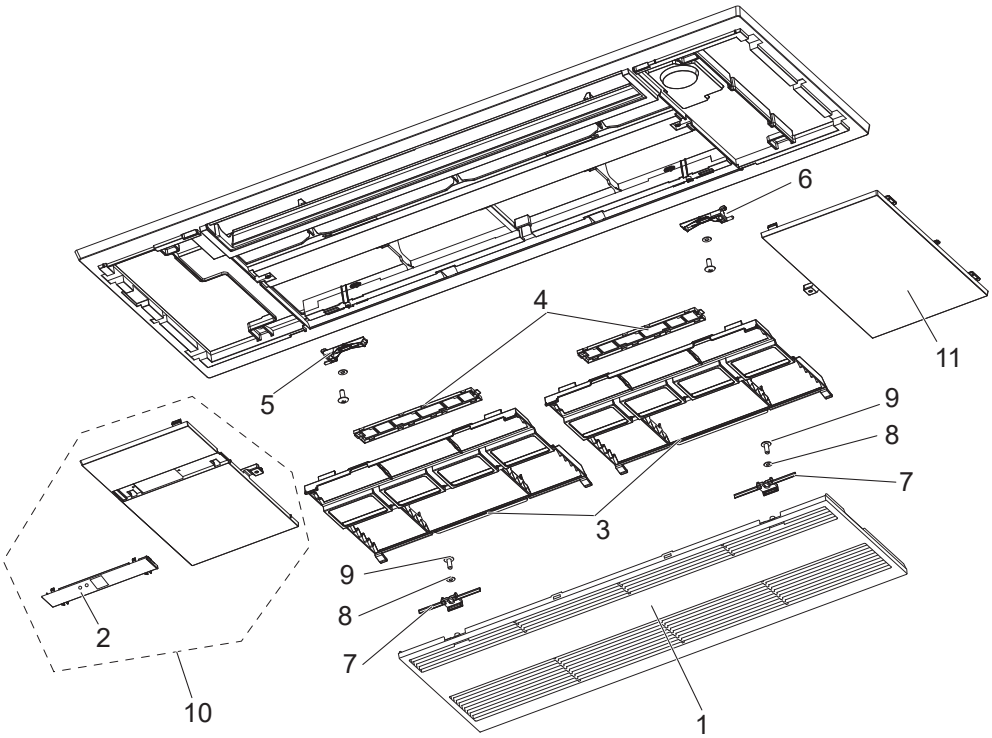

1. The part quantity below indicates the required number of pieces per unit.
2. The circled No. indicates that the part is not shown in the figure.

No.	Part No.	Part Name	MLP-444WU	Symbol in Wiring Diagram	Remarks
1	M21 ECA 010	GRILLE ASSEMBLY (W)	1		
2	T2W EB0 093	DISPLAY COVER SET	1		
3	M21 EBF 100	AIR FILTER (AIR PURIFYING FILTER)	2		
4	—	AIR CLEANING FILTER (ANTI-ALLERGY ENZYME FILTER)	1		MAC-408FT-E
5	M21 EA0 054	GRILLE SHAFT L	1		
6	M21 EA1 054	GRILLE SHAFT R	1		
7	M21 EAC 049	GRILLE KNOB (W)	2		
8	—	WASHER	2		Z006Z051H07
9	—	SCREW	2		Z004Z015H37
10	T2W EA6 975	SIDE PANEL L ASSEMBLY (W)	1		
11	M21 EAZ 976	SIDE PANEL R ASSEMBLY (W)	1		
12	M21 EAF 067	SCREW CAP (W)	1		
13	M21 EA9 250	SCREW ASSEMBLY	1		

GRILLE: MLP-444WU

Unit: inch

1.SPECIFICATION

ITEM		CONTENTS
EXTERIOR	COLOR(MUNSELL NO.)	WHITE(4.0GY 9.1/0.2)
	SURFACE TREATMENT	NONE
	MATERIAL	ABS RESIN
MASS		8LBS.

2.OUTLINE DRAWING

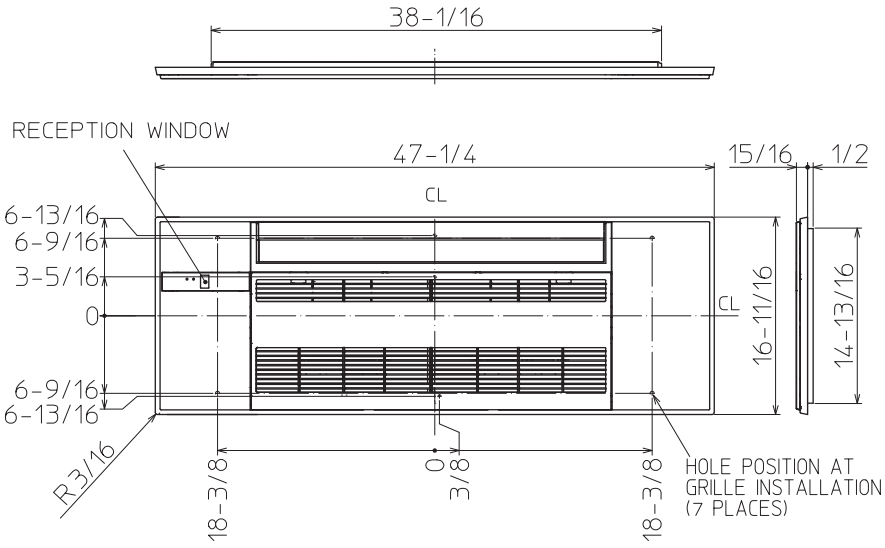

MLZ-KP09NA2 MLZ-KP12NA2 MLZ-KP18NA2

2-3. GRILLE

MLP-449WU: MLZ-KP•NA2 - U1

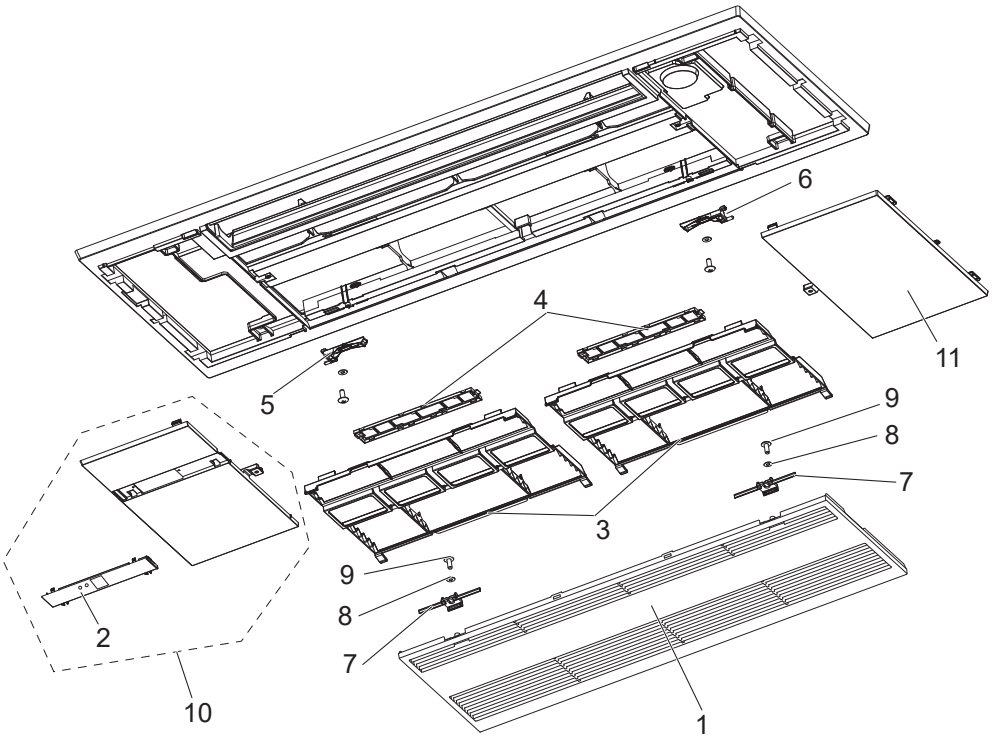

1. The part quantity below indicates the required number of pieces per unit.
2. The circled No. indicates that the part is not shown in the figure.

No.	Part No.	Part Name	MLP-449WU	Symbol in Wiring Diagram	Remarks
1	U02 001 521	GRILLE ASSEMBLY (W)	1		
2	U02 001 816	DISPLAY COVER SET	1		Includes display sheet (Mitsubishi)
3	U02 001 500	AIR FILTER (AIR PURIFYING FILTER)	2		
4	—	AIR CLEANING FILTER (ANTI-ALLERGY ENZYME FILTER)	1		MAC-408FT-E
5	U02 002 521	GRILLE SHAFT L	1		
6	U02 003 521	GRILLE SHAFT R	1		
7	U02 004 521	GRILLE KNOB (W)	2		
8	U02 A02 067	BOSS CAP (FOR FIXING GRILLE KNOB)	2		
9	U02 001 087	SCREW	2		Z004Z015H37
10	U02 A14 000	SIDE PANEL L ASSEMBLY (W)	1		Includes display sheet (Mitsubishi)
11	U02 A13 000	SIDE PANEL R ASSEMBLY (W)	1		
⑫	U02 011 087	SCREW CAP (W)	1		
⑬	U02 002 087	SCREW ASSEMBLY	1		M5 × 0.8 × 16: 6 pcs. Self-tapping screws 4 × 12: 1 piece

GRILLE: MLP-449WU

Unit: inch

1.SPECIFICATION

ITEM		CONTENTS
EXTERIOR	COLOR(MUNSELL NO.)	WHITE(4.0GY 9.1/0.2)
	SURFACE TREATMENT	NONE
	MATERIAL	ABS RESIN
MASS		8.2LBS.

2.OUTLINE DRAWING

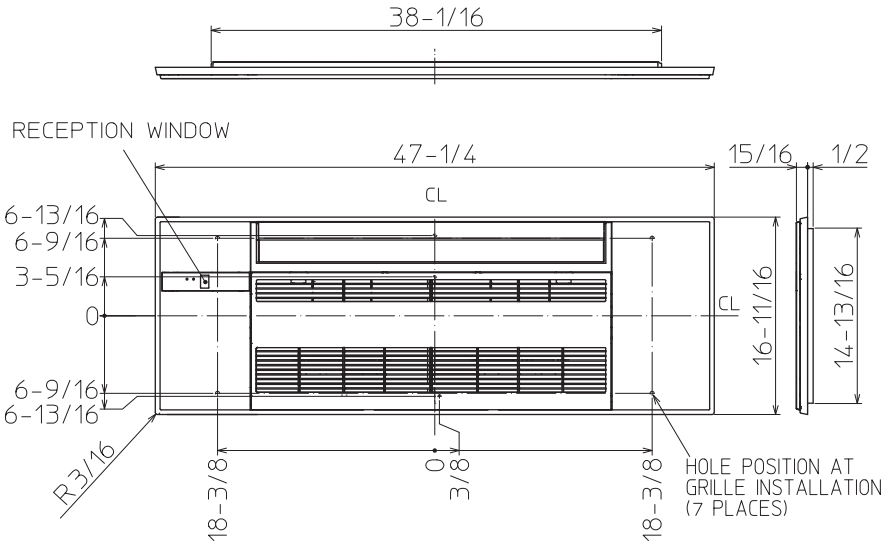

2-4. AIR FILTER (AIR PURIFYING FILTER)

- **Clean every 2 weeks**
- Remove dirt by a vacuum cleaner, or rinse with water.
- Dry it well in shade before installing it.
- Install the tabs into the intake grille hole.

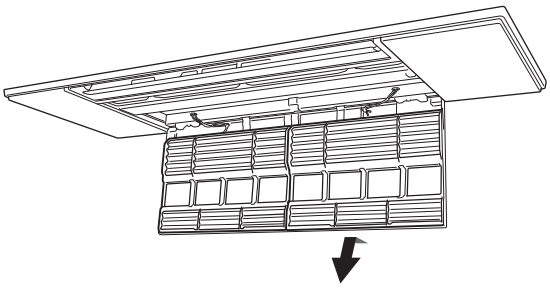

NOTE:

- Clean the filters regularly for best performance and to reduce power consumption.
- Dirty filters cause condensation in the air conditioner which will contribute to the growth of fungi such as mold.

2-5. AIR CLEANING FILTER (ANTI-ALLERGY ENZYME FILTER)

Back side of air filter

Clean every 3 months:

- Remove dirt by a vacuum cleaner.
- Install the tabs into the intake grille hole.

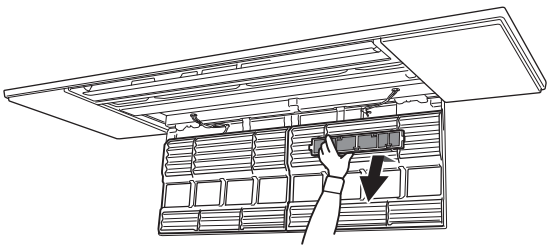

When dirt cannot be removed by vacuum cleaning:

- Soak the filter and its frame in lukewarm water before rinsing it. (Diluted mild detergents can be used when dirt cannot be removed.)
- After washing, dry it well in shade.

Every year:

- Replace it with a new air cleaning filter for best performance.

Model	Part No.
MLZ-KP09NA-U1 **MLZ-KP12NA-U1** **MLZ-KP18NA-U1** **MLZ-KP09NA2-U1** **MLZ-KP12NA2-U1** **MLZ-KP18NA2-U1**	**MAC-408FT-E**

NOTE:

- Clean the filters regularly for best performance and to reduce power consumption.
- Dirty filters cause condensation in the air conditioner which will contribute to the growth of fungi such as mold.

MITSUBISHI ELECTRIC CORPORATION

HEAD OFFICE: TOKYO BUILDING, 2-7-3, MARUNOUCHI, CHIYODA-KU, TOKYO 100-8310, JAPAN

© Copyright 2018 MITSUBISHI ELECTRIC CORPORATION

Issued: Sep. 2026 No. OBB802 REVISED EDITION-E
Issued: Nov. 2025 No. OBB802 REVISED EDITION-D
Issued: Jun. 2024 No. OBB802 REVISED EDITION-C
Issued: Apr. 2022 No. OBB802 REVISED EDITION-B
Issued: Dec. 2019 No. OBB802 REVISED EDITION-A
Published in Mar. 2018 No. OBB802
Made in Japan

Specifications are subject to change without notice.