MITSUBISHI ELECTRIC
Heating and Cooling

Job Name:_____ **Engineer:** _____
Purchaser:_____
Location:_____
Submitted To:_____ **For:** **Reference** ☐ **Approval** ☐ **Construction** ☐
Submitted By:_____
Unit Designation:_____ **Schedule No.**_____

SUBMITTAL DATA: MS-A09WA-1 / MU-A09WA

Capacities:

Cooling (Max.)..... 9500Btu/h (2.8kW/h)

SEER.....13

Indoor Unit Specification:

Power Supply *1.....115Vac 1Φ 60Hz
Disconnect Switch.....15A
MCA 1.2A
Weight.....23lbs (10.4Kg)
Sound (L-M-H) .....26-32-40-42dB(A)
Airflow (L-M -H) .....Dry CFM183-261-335-367
..... Wet CFM 162-233-300-328

Outdoor Unit Specification:

Power Supply *1.....115Vac 1Φ 60Hz
Breaker Size 15A
MCA 14A
Weight.....78lbs (35.4Kg)
Sound ..... 47dB(A)

Refrigerant Piping:

Max. Ht. Difference 35ft. (10.7m)
Max. Length.....65ft. (19.8m)
Liquid..... 1/4" (6.35mm)
Gas ..... 3/8" (9.52mm)

Standard Features:

- Ozone Friendly R-410A Refrigerant
- Significant Energy Savings (up to 30%)
- Super Quiet Technology
- Pre-charged Refrigerant
- Fuzzy Logic "I Feel" mode for comfort cooling
- Easy maintenance with self diagnostic feature
- Catechin Plus air purifying system
- MS-A09/12WA-1: Remote controller has been changed
- MS-A09/12WA-1:Temperature Indication function(°F/°C) has been added

Operating Range:

		Indoor Intake Air Temp.	Outdoor Intake Air Temp.
Cooling	Max.	95°F/35°C D.B. 71°F/22°C W.B.	115°F/46°C D.B.
	Min.	67°F/19°C D.B. 57°F/14°C W.B.	67°F/19°C D.B.

*1 **Electrical Wiring:**
Power to the indoor unit is supplied by the outdoor unit on terminals L1, N

•Specifications subject to change without notice.

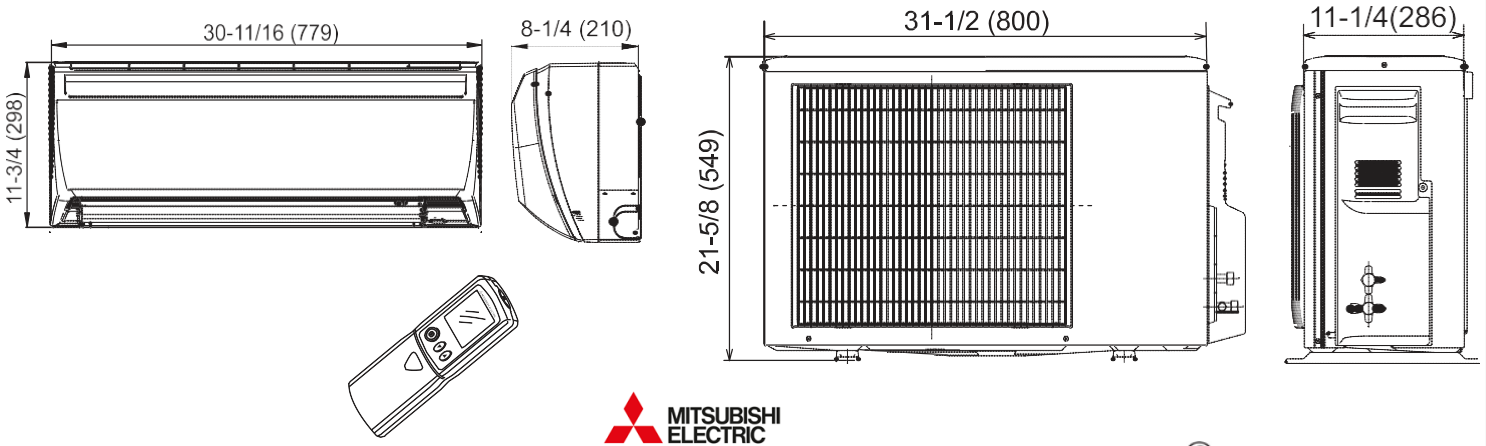

Dimension inch (mm)

MITSUBISHI ELECTRIC
Changes for the Better

© Mitsubishi Electric 2016

Notes: