MITSUBISHI ELECTRIC
Heating and Cooling

Job Name:_____ Engineer:_____
Purchaser:_____
Location:_____
Submitted To:_____ For: Reference ☐ Approval ☐ Construction ☐
Submitted By:_____
Unit Designation:_____ Schedule No._____

SUBMITTAL DATA: MSY-D30NA-8 / MUY-D30NA-1

Capacities:

Cooling (Max.)..... 30700Btu/h (9kW/h)
Cooling (Min.) 9800Btu/h (3.3kW/h)
SEER(EER).....16(9.1)

Indoor Unit Specification:

Power Supply *1 .....208/230Vac 1Φ 60Hz
Max. Fuse Size.....15A
MCA 1A
Weight.....40lbs (18.1Kg)
Sound (L-M-H) .....32-42-49 dB(A)
Airflow (L-M -H) .....Dry CFM 389-639-848
..... Wet CFM 350-576-763

Outdoor Unit Specification:

Power Supply *1.....208/230Vac 1Φ 60Hz
Breaker Size 25A
MCA 21A
Weight.....126lbs (57.1Kg)
Sound ..... 55 dB(A)

Refrigerant Piping:

Max. Ht. Difference 50ft. (12.2m)
Max. Length.....100ft. (19.8m)
Liquid..... 3/8"(9.53mm)
Gas ..... 5/8" (15.88mm)

Standard Features:

- Ozone Friendly R-410A Refrigerant
- Significant Energy Savings (16 SEER)
- Super Quiet Technology
- Pre-charged Refrigerant
- 2 year parts, 6 years compressor warranty
- Fuzzy Logic "I Feel" mode for comfort cooling
- Easy maintenance with self diagnostic feature
- Catechin Plus air purifying system
- Variable compressor speed inverter technology
- Low ambient cooling (14°F)

Operating Range:

		Indoor Intake Air Temp.	Outdoor Intake Air Temp.
Cooling	Max.	95°F / 35°C DB 67°F / 19°C WB	115° / 46°C DB
	Min.	67 F / 19 C DB 57 F / 14 C WB	14°F / -10°C

*1 **Electrical Wiring:**
Power to the indoor unit is supplied by the outdoor unit on terminals S1, S2

• Specifications subject to change without notice.

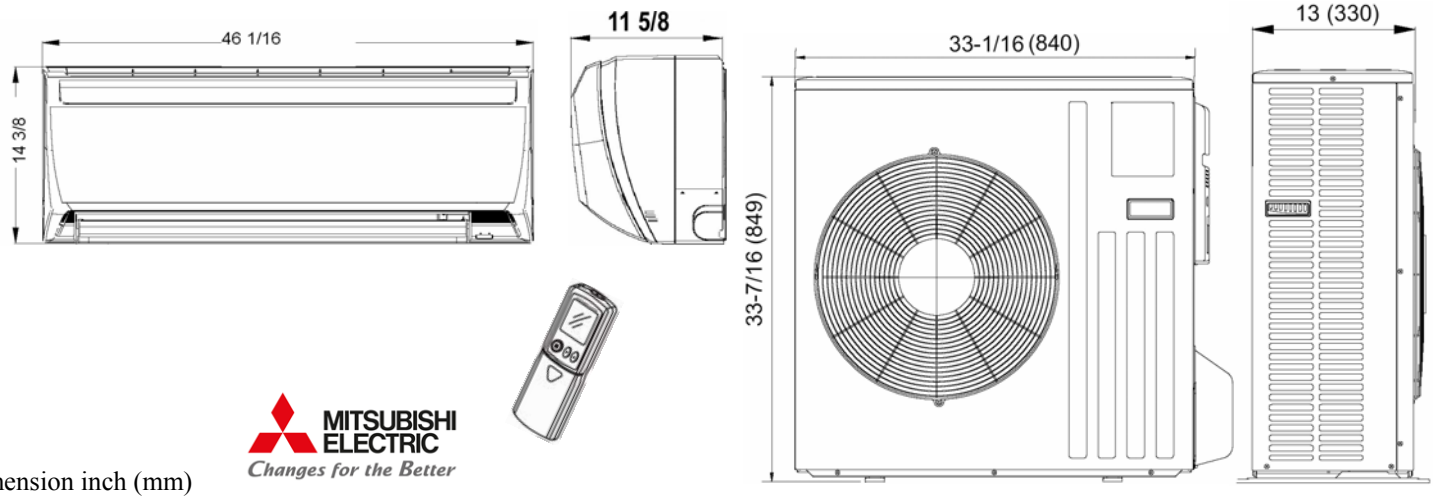

MITSUBISHI ELECTRIC
Changes for the Better

Dimension inch (mm)

Notes:

© Mitsubishi Electric 2016