MITSUBISHI ELECTRIC
Changes for the Better

P-SERIES

SUBMITTAL DATA: PLA-A30EA8 & PUY-A30NHA7

30,000 BTU/H CEILING CASSETTE AIR-CONDITIONING SYSTEM

Job Name:	Engineer:
Purchaser:	Application: ☐ Std. Cooling ☐ Ultra Low Ambient Cooling
Submitted To:	For: ☐ Reference ☐ Approval ☐ Construction
Submitted By:	Location:
System Designation:	Schedule No.:

ACCESSORIES:

Indoor Unit

- ☐ Multifunction Casement / High Efficiency Filter (PAC-SJ41TM-E / PAC-SH59KF-E)
- ☐ Grille with 3D i-see Sensor™ (PLP-41EAEU) - (Required ordered separately)

Optional Controls

- ☐ Wireless Controller (MHK2)
- ☐ Advanced Wired Controller (PAR-41MAAU)
- ☐ Simple Wired Controller (PAC-YT53CRA)
- ☐ Interface Module (RMF-CA200)
- ☐ Wireless Remote Controller (PAR-FL32MA)(Requires Signal Receiver (PAR-SR4LU-E))
- ☐ M-NET Adapter (PAC-SJ95MA-E)

Outdoor Unit

- ☐ Front Wind Guard (PFR-24-30)
- ☐ Rear Wind Guard (PRE-24-30)
- ☐ Side Wind Guard (PSD-24-30)

Note: Mitsubishi Electric (MESCA) supports the use of only MESCA supplied and approved Snow Guard / Wind Deflectors / Windscreens and accessories for proper functioning of the unit(s). Use of non-MESCA supported Snow Guard / Wind Deflectors / Windscreens and accessories will affect warranty coverage.

SPECIFICATIONS:

Rated Conditions (Capacity / Input)*		
Cooling	Btu/h / W	30,000 / 2,540

* Rating Conditions per AHRI Standard:
Cooling | Indoor: 80ºF (27ºC) DB / 67ºF (19ºC) WB
Cooling | Outdoor: 95ºF (35ºC) DB / 75ºF (24ºC) WB

Capacity Range		
Cooling	Btu/h	9,000 - 30,000

Operating Range	
Cooling	-40F** (-40.0ºC) to 115ºF (46ºC) DB

** Windscreens required for cooling operation below 23°F (-5°C)

AHRI Efficiency Rating	
EER2	11.8
SEER2	23.4

Electrical Power Requirements	208 / 230V, 1-Phase, 60 Hz

Specifications are subject to change without notice.

Minimum Circuit Ampacity (MCA) *		Breaker Size	MOCP (Outdoor)
Indoor 1 AMP	Outdoor 19 AMP	25 AMP	26 AMP

***All electrical work shall comply with National (CEC) and local codes and regulations.**

Indoor Unit		
Fan Motor (ECM)	F.L.A.	0.59
Fan Motor Output	W	120
SHF / Moisture Removal		0.80 / 5.4 pt./h
Drain Lift Mechanism (Included)	H: In.	33-7/16
Field Drainpipe Size O.D.	In.(mm)	1-1/4 (32)

Outdoor Unit		
Compressor		DC INVERTER-driven Twin Rotary
Fan Motor (ECM)	F.L.A.	0.4
Fan Motor Power	W	86

Airflow Rate (Low-M1-M2-Hi)			
Indoor (Cooling)	DRY	CFM	570-670-780-880
	WET		530-630-740-840
Outdoor	DRY		1,940

Sound Pressure Level			
Indoor (Low-M1-M2-Hi)		dB(A)	28-32-35-38
Outdoor	Cooling		47

External Dimensions		
Indoor (H x W x D) Grille ([H x W x D)]	In.(mm)	11-3/4 [1-9/16] x 33-1/16 [37-13/32] x 33-1/16 [37-13/32] (298 [40] x 840 [950] x 840 [950])
Outdoor (H x W x D)		37-1/8 x 37-13/32 x 13 + 1-3/16 (943 x 950 x 330 + 30)

Net Weight		
Indoor (Unit / Grille)	Lbs.(kg)	56 / 11 (25 / 5)
Outdoor		151 (68)

External Finish	
Indoor	Munsell 1.0Y 9.2/0.2
Outdoor	Ivory Munsell No. 3Y 7.8 / 1.1

Refrigerant	R410A ; 7lbs., 11oz. (3.5kg)

Refrigerant Piping (Flared)		
Liquid (High Pressure)	In.(mm)	3/8 (9.52)
Gas (Low Pressure)		5/8 (15.88)
Maximum Total Refrigerant Pipe Length	Ft. (m)	225 (69)
Maximum Vertical Separation	Ft. (m)	100 (30)

Should this document be altered or changed without MESCA's permission, it becomes null and void. MESCA assumes no responsibility for any consequences in such cases.

© 2023 Mitsubishi Electric Sales Canada Inc.

DIMENSIONS: PLA-A30EA8

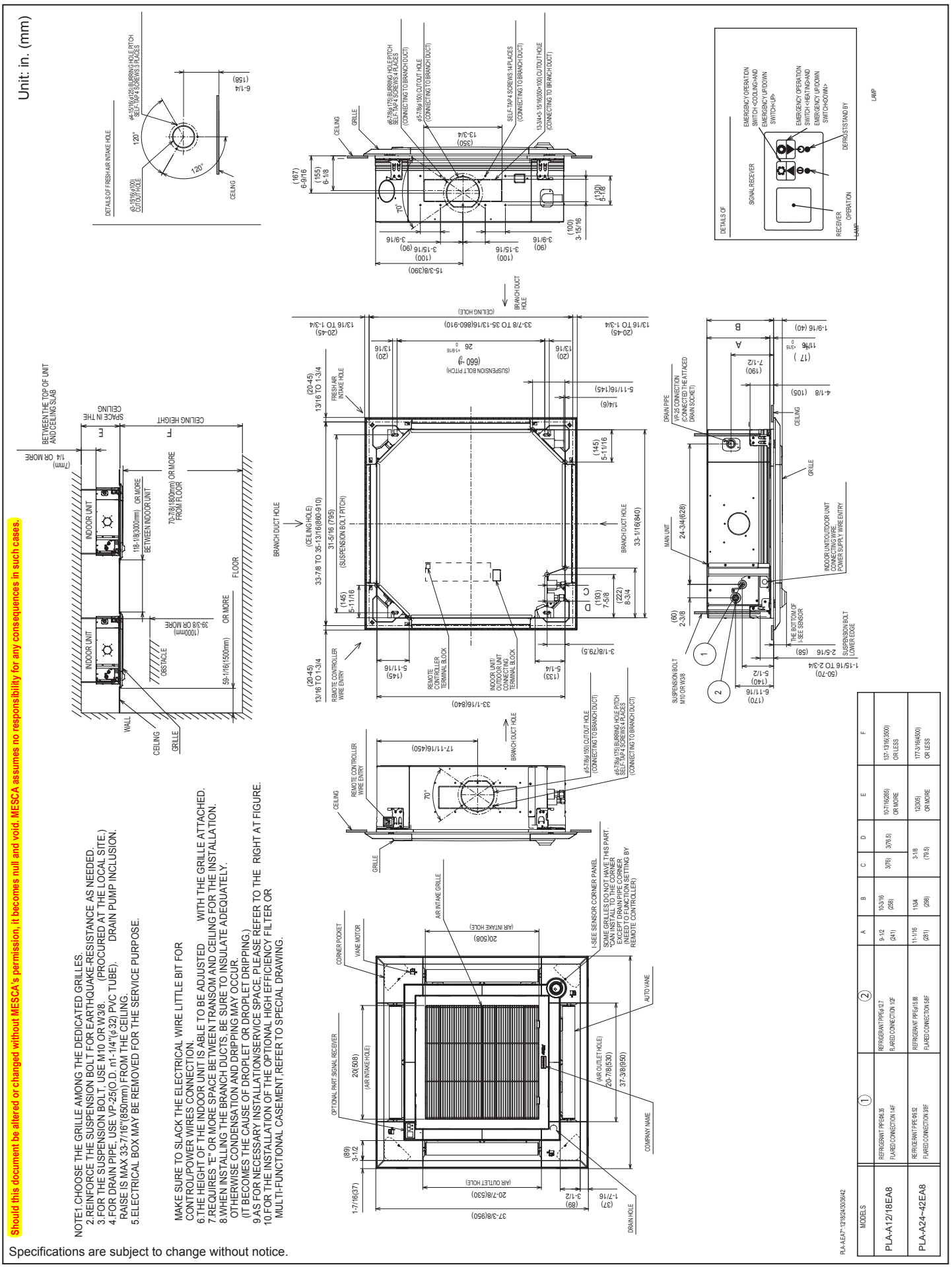

Should this document be altered or changed without MESCA's permission, it becomes null and void. MESCA assumes no responsibility for any consequences in such cases.

NOTE1.CHOOSE THE GRILLE AMONG THE DEDICATED GRILLES.
2.REINFORCE THE SUSPENSION BOLT FOR EARTHQUAKE-RESISTANCE AS NEEDED.
3.FOR THE SUSPENSION BOLT, USE M10 OR W3/8. (PROCURED AT THE LOCAL SITE.)
4.FOR DRAIN PIPE, USE VP-25(O.D. n1-1/4"(φ32) PVC TUBE). DRAIN PUMP INCLUSION.
RAISE IS MAX 33-7/16"(850mm) FROM THE CEILING.
5.ELECTRICAL BOX MAY BE REMOVED FOR THE SERVICE PURPOSE.

MAKE SURE TO SLACK THE ELECTRICAL WIRE LITTLE BIT FOR CONTROL/POWER WIRES CONNECTION.
6.THE HEIGHT OF THE INDOOR UNIT IS ABLE TO BE ADJUSTED WITH THE GRILLE ATTACHED.
7.REQUIRES "E" OR MORE SPACE BETWEEN TRANSOM AND CEILING FOR THE INSTALLATION.
8.WHEN INSTALLING THE BRANCH DUCTS, BE SURE TO INSULATE ADEQUATELY. OTHERWISE CONDENSATION AND DRIPPING MAY OCCUR. (IT BECOMES THE CAUSE OF DROPLET OR DROPLET DRIPPING.)
9.AS FOR NECESSARY INSTALLATION/SERVICE SPACE, PLEASE REFER TO THE RIGHT AT FIGURE.
10.FOR THE INSTALLATION OF THE OPTIONAL HIGH EFFICIENCY FILTER OR MULTI-FUNCTIONAL CASE,MENT,REFER TO SPECIAL DRAWING.

PLA-A(EA)7~12/18/24/30/36/42

MODELS	①	②	A	B	C	D	E	F
PLA-A12/18EA8	REFRIGERANT PIPE(φ6.35 FLARED CONNECTION 14F	REFRIGERANT PIPE(φ12.7 FLARED CONNECTION 1/2F	9-1/2 (241)	10-3/16 (258)	3(76)	3(76.5)	10-7/16(265) OR MORE	137-13/16(3500) OR LESS
PLA-A24~42EA8	REFRIGERANT PIPE(φ9.52 FLARED CONNECTION 38F	REFRIGERANT PIPE(φ15.88 FLARED CONNECTION 58F	11-1/16 (281)	11 3/4 (298)	3-1/8 (79.5)		12(305) OR MORE	177-3/16(4500) OR LESS

Specifications are subject to change without notice.

DIMENSIONS: PUY-A30NHA7

Unit: mm (in.)

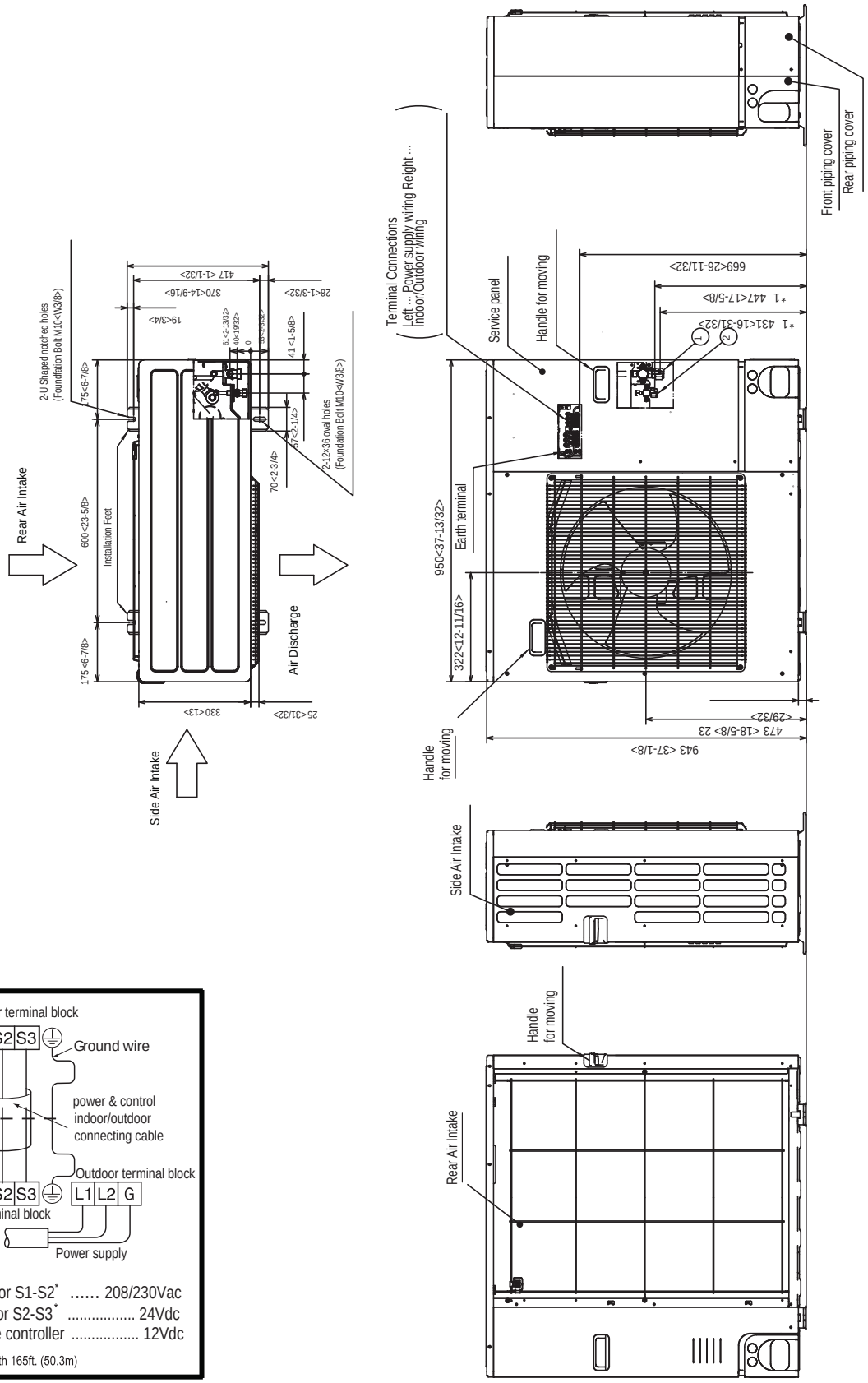

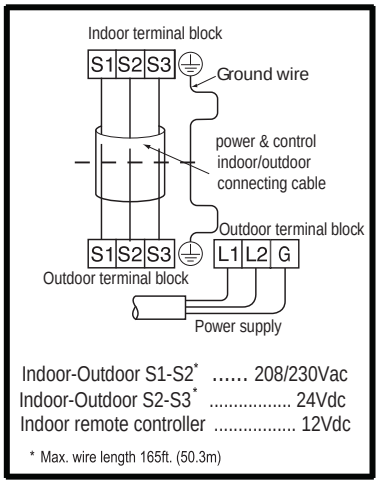

Should this document be altered or changed without MESCA's permission, it becomes null and void. MESCA assumes no responsibility for any consequences in such cases.

AHRI CERTIFIED www.ahridirectory.org Unitary Small AC AHRI Standard 210/240
C ETL LISTED US Intertek
ENERGY STAR PARTICIPANT
MITSUBISHI ELECTRIC Heating and Cooling

© 2023 Mitsubishi Electric Sales Canada Inc.